CANE SUGAR

NOEL DEERR

#6.00/

The Cuba Review

CANE SUGAR.

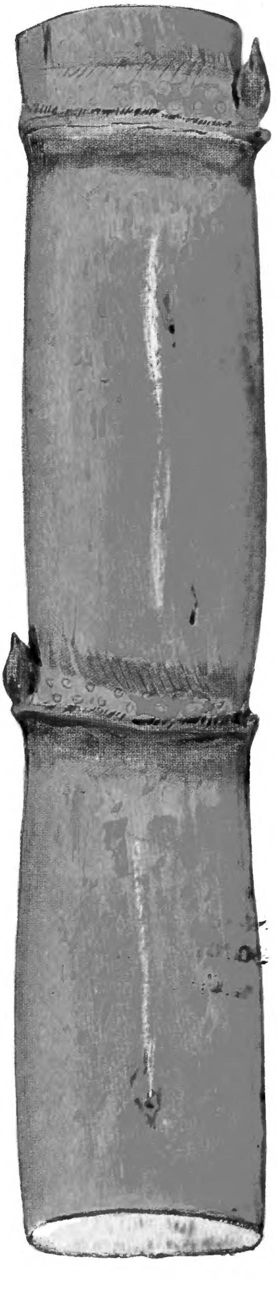

$\frac{3}{4}$
SIZE

BOURBON.

CANE SUGAR

A Textbook on the Agriculture of the Sugar Cane, the Manufacture of Cane Sugar, and the Analysis of Sugar-House Products

BY

NOËL DEERR

SECOND (REVISED AND ENLARGED) EDITION

London:
NORMAN RODGER
2 St. Dunstan's Hill
E.C.3

1921

PREFACE

The present edition of "CANE SUGAR" now offered to the public has been completely rewritten, preserving at the same time the general arrangement followed in the first edition.

During the ten years that have passed between the issue of the two editions the writer has had the benefit of extensive experience in Cuba and in a New York refinery. The period he spent in America has been of special value, since it afforded the opportunity of systematically examining the collections of technical literature to be found in the great libraries of the western republic. While these may be no more complete than those accumulated by the elder civilization, the facilities afforded for research in the way of accessibility, card catalogues and cross-references add very much to their value.

In preparation for the present edition, the writer made a survey of patent specifications dealing with sugar and sugar machinery, and much material thus found has been included; and, although objection may be made to the inclusion of bygone matters in a textbook intended for present-day use, an account of the development of the train of thought in invention is not without an immediately utilitarian value. Of the patent files consulted, those of the British Patent Office have been the most adopted, as the system of arrangement and of indexing there employed is far superior to that used by the Patent Offices either of France or of the United States of America.

My thanks are due to many friends for help and criticism. In addition to those whose services have already been acknowledged in the first edition, I have now to thank Mr. JAS. HAMILL, who read in manuscript those chapters more especially dealing with machinery; DR. C. A. BROWNE for criticism of those parts bearing on sugar analysis; DR. C. A. BARBER, C.I.E., whose specialized knowledge of the cane in its botanical aspect has saved me from sundry errors; DR. E. J. BUTLER, C.I.E., who checked the proofs of Chapter IX on the Pests and Diseases of the Sugar Cane; and MR. JAMES P. OGILVIE, A.I.C., who read through the last ten chapters and made some suggestions in the text.

NOËL DEERR.

Bombay,
April, 1921.

CONTENTS

PAGE

CHAPTER I
The Cane - 1

CHAPTER II
The Composition of the Sugar Cane - 12

CHAPTER III
Range and Climate - 19

CHAPTER IV
Variation in the Cane and Cane Varieties - 31

CHAPTER V
The Soils of the Cane-Growing Regions - 64

CHAPTER VI
The Manuring of the Cane - 79

CHAPTER VII
The Irrigation of the Cane - 108

CHAPTER VIII
The Husbandry of the Cane - 117

CHAPTER IX
The Pests and Diseases of the Cane - 139

CHAPTER X
The Harvesting of the Cane - 175

CHAPTER XI
The Extraction of the Juice by Mills - 185

CHAPTER XII
The Diffusion Process - 251

CHAPTER XIII
The Action of Heat, Alkalies and Acids on Sugars and Cane Juices - 257

PAGE

CHAPTER XIV

The Defecation of Cane Juice - - - - - - - - - 269

CHAPTER XV

Carbonation Processes - - - - - - - - - - - 280

CHAPTER XVI

Sulphitation - - - - - - - - - - - - - 289

CHAPTER XVII

Filtration - - - - - - - - - - - - - 299

CHAPTER XVIII

Evaporation - - - - - - - - - - - - - 308

CHAPTER XIX

Sugar Boiling and Crystallization-in-Motion - - - - - - 383

CHAPTER XX

The Separation of the Crystals - - - - - - - - 407

CHAPTER XXI

Raw Sugar - - - - - - - - - - - - - 428

CHAPTER XXII

Molasses - - - - - - - - - - - - - 444

CHAPTER XXIII

Bagasse as Fuel and the Steam Generating Plant of the Cane Sugar Factory - - - - - - - - - - - - - 454

CHAPTER XXIV

The Polarimeter - - - - - - - - - - - - 473

CHAPTER XXV

The Determination of Cane Sugar and the Assay of Sugar-House Products - - - - - - - - - - - - 490

CHAPTER XXVI

The Determination of Reducing Sugars - - - - - - 532

CHAPTER XXVII

The Control of the Factory - - - - - - - - - 542

CHAPTER XXVIII

Fermentation with special Reference to the Sugar House - - - 564

APPENDIX - - - - - - - - - - - - - - 589

INDEX - - - - - - - - - - - - - - 619

LIST OF PLATES

		TO FACE PAGE
Frontispiece : Bourbon Cane.		
I.	Creole Cane	1
II.	Rose Bamboo Cane	16
III.	Purple Bamboo Cane	33
IV.	Striped Bamboo Cane	37
V.	White Tanna Cane	44
VI.	Striped Tanna Cane	48
VII.	Black Tanna Cane	53
VIII.	Salangore Cane	60
IX.	Port Mackay Cane	65
X.	Uba Cane	80
XI.	Irrigating Sugar Cane Seed in Hawaii	112
XII.	Fowler Steam Plough Outfit	116
	Ox Plough at Work in Cuba	116
XIII.	Fordson Motor Tractors at Work in Tucumán	117
XIV.	Disc Harrow	124
	Spaulding Deep Tilling Plough	124
XV.	A Java Cane Field ready for Planting	125
XVI.	Some Diseases of Canes	144
XVII.	Red Rot of Stem	160
XVIII.	Pine Apple Disease	161
XIX.	The Wheeler-Wilson Cane Loader	176
	Dumping from Cart to Railroad Car in Cuba	176
XX.	Ox Team with Cane Load	177
	Traction Engine transporting Cane	177
	A Typical Cane Train in the Hawaiian Islands	177
XXI.	Cane Hopper and Elevator	184
XXII.	Unloading Cane with Hoist and Dump	185
XXIII.	The Searby Shredder	232
	The Deerr Indicator	232
XXIV.	The Deerr Macerator	233
XXV.	The Philippe Filter	304
	The Sweetland Leaf Filter	304
XXVI.	The Kelly Filter Press	305
XXVII.	Cooling Tower for Water in Cuba	368
	Spraying System for cooling Water in Cuba	368
XXVIII.	Appearance of Yeasts	576
XXIX.	Sporulation of Yeasts	577

ABBREVIATIONS USED IN THE REFERENCES IN THIS VOLUME

Agric. Agriculture, Agricultural.
Ann. Bot. Annals of Botany.
Ann. Chim. Phys. Annales de Chimie et Physique.
Ber. Berichte der deutschen chemischen Gesellschaft.
Bull. Bulletin.
Bull. Assoc. Chim. Suc. Bulletin de l'Association des Chimistes de Sucrerie et de Distillerie.
C.R. Comptes rendus hebdomadaires des Seances de l'Academie des Sciences.
Chem. News. The Chemical News and Journal of Physical Science.
Deut. Zuck. Die deutsche Zuckerindustrie.
Ent. Entomological.
H.S.P.A. Ex. Sta. Hawaiian Sugar Planters' Association Experiment Station.
Haw. Pl. Mon. Hawaiian Planters' Monthly.
Int. Sug. Jour. International Sugar Journal.
Java Archief. Archief voor de Suikerindustrie in Nederlandsche Indië.
Jour. Agric. Sc. Journal of Agricultural Science.
Jour. Am. Chem. Soc. Journal of the American Chemical Society.
Jour. Chem. Soc. Journal of the Chemical Society.
Jour. Econ. Ent. Journal of Economic Entomology.
Jour. Fab. Suc. Journal des Fabricants de Sucre.
Jour. Ind. Eng. Chem. Journal of Industrial and Engineering Chemistry.
Jour. prak. Chem. Journal für praktische Chemie.
La. Ex. Sta. Louisiana State University Experiment Station.
La. Plant. The Louisiana Planter and Sugar Manufacturer.
Phil. Mag. The London, Edinburgh and Dublin Philosophical Magazine.
Proc. Proceedings.
S.C. The Sugar Cane.
Ser. Series.
Soc. Society.
Trans. Transactions.
U.S. Dept. Agric. United States Department of Agriculture.
W. Ind. Bull The West Indian Bulletin
Zeit. fur Instr. Zeitschrift für Instrumenkunde.
Zeit. phys. Chem. Zeitschrift für physikalische Chemie.
Zeit. Rüben. Zeitschrift für Rübenzuckerindustrie.
Zeit. Ver. deut. Zuck. Zeitschrift des Vereins der deutschen Zuckerindustrie.
Zeit. Zuck. Böhm. Zeitschrift für Zuckerindustrie in Böhmen.

PLATE I.

CREOLE.

CANE SUGAR

CHAPTER I

The Cane

The sugar cane is a perennial grass, the cultivation of which is confined to the warmer regions of the earth. In all probability it is of palæo-tropical origin, and Eastern Asia is usually assigned as its home by economic botanists. Nevertheless the cane was found growing in Polynesia by the first European visitors, and also in the Hawaiian Islands. Ethnologists assert that these islands were settled from the South Pacific at a very early date, the native legends confirming this assumption. As it is probable that these early voyagers brought the sugar cane along with them, the presence of the plant in the South Pacific at a very remote time would be indicated, and it would then appear that the cane is indigenous equally to the South Pacific as to Eastern Asia. This suggestion is made more probable when the very marked difference in habit between the Indian canes and those of Otaheite and other Polynesian islands is remembered. That the sugar cane is indigenous to Polynesia was probably first suggested by Sagot and Raoul in their "Manuel pratique des Cultures Tropicales," Paris, 1893. Their conclusion is based on observation in that locality, on Maori legend, and on the presence of a *Saccharum violaceum* in the island of Rurutu near Otaheite, this last island receiving its name from the name of the cane.

The cane plant is made up of the root and root stock, the stalk, the leaf, and the inflorescence. The structure and function of these different parts are described below.

The Stalk.—The stalk of the cane is roughly cylindrical, and in some varieties is swollen between the joints, giving the internodes a barrel shape. Its size differs not only with variety, but also with conditions of growth. The diameter lies between a minimum of 0·5 inch to a maximum of 3 inches. The smallest diameter is found in the reed-like canes grown by the ryots of British India and classed by Hadi[1] as Ukh canes. Of the canes cultivated elsewhere, that with the smallest diameter is the Uba cane, itself probably of Indian origin. The greatest diameter is found in the Elephant cane of Cochin China, which is not, however, a commercial variety. Of the older cultivated varieties, the Tanna canes are of greater and the Java or Batavian of less diameter, the Otaheite cane being intermediate between these two. The length of the stalk under the most favourable conditions may exceptionally attain to as much as thirty feet, but an average length of twelve feet is typical of a well-grown crop. Similarly, the weight of an individual stalk will reach a maximum of fifteen pounds, the average weight in a well-grown crop being six to seven pounds.

In the early stages of the cane's growth it is erect, and in some varieties, as for instance the Tanna canes, it remains so throughout the whole period of its growth ; in others, as the Otaheite, its habit is recumbent, and in such cases the cane is said to "lodge."

The stalk is made up of a series of joints or internodes, *f* (*Fig.* 1), separated from each other by the nodes *e*. Generally the internodes grow in a continuous line, but occasionally they are more or less zigzag. The node is usually of somewhat greater diameter than the internode and in some varieties is notably swollen. The length of the internode will exceptionally reach 10 inches, but a length of 6 inches is typical of Otaheite cane grown under favourable conditions. The Tanna canes are an example of a cane short-jointed in proportion to diameter, the Uba cane and the seedlings B 147 and P.O.J. 100 being types where the length is great compared with the diameter. The length of the joint is, however, influenced by leaf development, by drought or by cold weather, by soil conditions or by disease. The number of joints may be as few as twenty or as many as eighty. At each node and alternately at opposite sides is an embryo cane known as the eye or bud, *b* (*Fig.* 1). It is the size of a pea or larger, and may be triangular, pointed, oval or hemispherical in shape. In some varieties the eye is very swollen and prominent. From the eye and running upwards appears a channel in the stalk ; this channel may be well marked, or in some cases may tend to disappear.

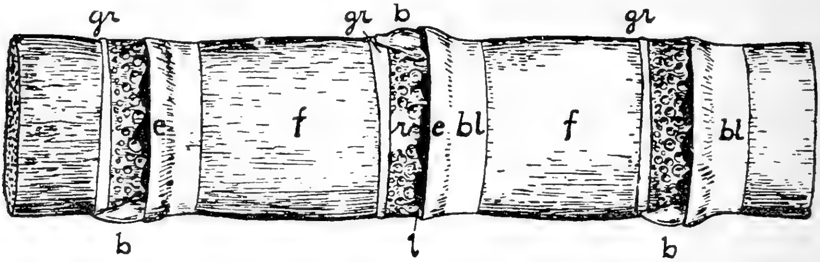

FIG. 1

Immediately above each joint appear from one to three rings of semiopaque whitish spots (*r*) ; here is the zone of adventitious roots, each spot being an embryonic root. The bloomband is shown at *bl*, the leaf-scar at *l*, and the growth ring at *gr*.

The eyes or buds serve to reproduce the cane by means of asexual propagation. Simultaneously the adventitious roots develop and serve to feed the plant until it has developed a root system of its own. In some varieties the eyes have a tendency to sprout while still attached to the parent plant, and the sprouting will always occur when the top of the cane or the vegetative point is removed or destroyed by insects or by disease. Similarly the adventitious roots may develop, forming a mass of aerial roots ; this development is one of the symptoms of the "sereh" disease.

Self-coloured canes are green, yellow or some shade of red, varying from pink to deep purple. Where sun-exposed, the colour may be so developed as to give a blotched or marbled appearance. Striped or ribbon canes are due to the development or absence of colouring matter in streaks running lengthwise with the stalk. Thus with a diminution of chlorophyll in stripes in a yellow cane, a green and yellow ribbon cane results; similarly, green and red, and yellow and red canes are known, and also varieties striped in two shades of red. The last case may occur in a cane with an even distribution of the red colouring matter, anthocyan, overlying strips of chlorophyll the colour of which is masked. Perhaps all arrangements possible from every combination of the three colours may occur. From striped canes self-coloured sports frequently occur, and this subject, which is of considerable economic interest, is discussed more fully in Chapter IV.

Structure of the Stalk.—On cutting across a cane it will be seen that it consists roughly of three parts, a hard outer rind, and a mass of softer tissue in the interior, interspersed with fibres, the latter being more frequent about the periphery of the stalk. The rind is made up of a thick epidermis with a strong outer cuticle, often with a thick layer of wax outside, impervious to water, and a layer of thick-walled cells; the function of the cuticle is to prevent evaporation of water from the stem of the cane, and to protect the softer interior parts from mechanical injuries; the layer of thick-walled cells gives rigidity and strength to the stem. These thick-walled cells gradually pass into the thin-walled cells of the ground tissue, or parenchyma, which serve to store up the sweet juice of the cane. The fibres are known as the fibro-vascular bundles; they consist of the wood vessels, sieve tubes and companion cells, surrounded by thick-walled fibres.

A cross-section of the cane, after Cobb[2], as seen under the low power of a microscope, is shown in *Fig.* 2. It consists of:—1. The epidermis, with thick cuticularized walls. 2. Thick-walled ground tissue of the rind. 3. A small vascular bundle; these are found mainly in the outer portion of the stem, and their function is chiefly mechanical. 4. An intermediate bundle with two vessels and a few thin-walled phloem elements. 5. Thick-walled fibres; these are the mechanical elements of the bundles, and are more numerous in the bundles towards the outside. 6. Thin-walled cells of the ground tissue or parenchyma. 7. A large vascular bundle found toward the centre of the stem.

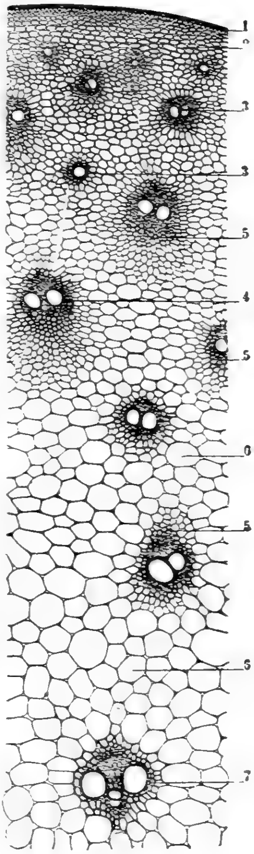

FIG. 2

In *Fig.* 3 is shown more highly magnified a bundle corresponding to 7 in *Fig.* 2. 1 is a vessel with unbordered pits; 2, an annular vessel; 3, a sieve tube with the companion elements making up the phloem; 4, an intercellular air space; 5 and 7, thick-walled mechanical elements, the fibres, or sclerenchyma, forming a sheath around the bundle; and 6, ground tissue or parenchyma. When seen in longitudinal section the cells of the parenchyma are found to be rather longer than wide.

The sieve tubes seen in longitudinal section are observed to be very elongated vessels, with perforated partition walls at intervals in their length; the vessels are continuous throughout their length.

In the internodes the fibro-vascular bundles run parallel, but at the nodes they freely branch and communicate with each other, and pass on into the leafbud and next internode, descending right into the roots of the cane.

Function of the Stalk.—The stalk serves in the economy of the plant in three ways. First of all, as a mechanical structure it supports the leaves and inflorescence; secondly, the fibrovascular system is charged with the duty of transporting water and food material from the roots to the leaves and carrying back to the stem the products of metabolic change formed in the leaf; thirdly, the parenchymatous cells receive the material so elaborated, which is there stored, or else used up as a source of energy by the growing plant.

Physiology of the Stalk.—In the life history of the stalk the following phases are distinguished:—

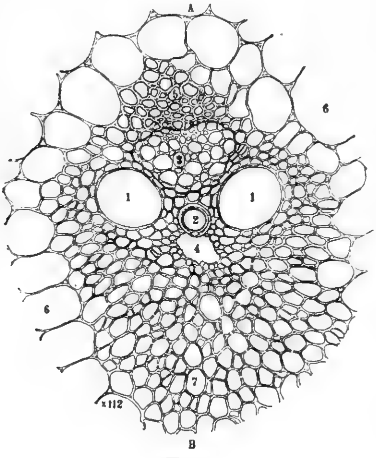

FIG. 3

1. In very young parts of the stalk only starch or albumen is present, which is consumed little by little in the formation of cellulose.

2. In young, rapidly growing parts of the stalk, the cane sugar brought down by the leaf is inverted, and whereas in the leaf the proportions of sucrose, glucose, and fructose were as 4 : 2 : 1, in the young joints the proportions are 0·8 : 1 : 1. A part of the invert sugar is used up in the formation of fibre, a part unites with the amides to form albumen, and a part is deposited as starch. In consequence of the inversion, the osmotic pressure is raised and this tends to favour the absorption of plant food.

3. In older joints the sucrose formed in the leaf remains unchanged when it reaches the joint, and the reducing sugars are used up, partly in respiration, or, perhaps, are partly converted by a reverted enzyme action into sucrose.

4. When the stalks are developed, the accumulated invert sugar is converted into sucrose; of the reducing sugars remaining the glucose is generally in excess.

5. When the stalks are ripe the leaves die and the accumulation of sugar gradually ceases; the remainder of the reducing sugars is changed to sucrose, eventually only traces remaining.

6. When the stalks are over-ripe the sucrose in the older joints is partly inverted, but this change does not prevent the younger parts of the cane accumulating sugar.

The Leaf.—The leaves of the cane are alternate and opposite, one at each joint; actually, the leaf consists of two parts, the leaf sheath and the leaf blade. The leaf sheath springs from the node. It completely embraces, at its base, the stalk, and gradually recedes from it; the sheath is colourless or pale green, and about 12 inches long at maturity. The blade is from 3 to 4 feet long, and 2 to 3 inches wide; in colour the leaves are varying shades of green; in some varieties variegated or entirely white leaves are often developed. Some canes (*S. violaceum*) have purple leaves. The leaves taper towards the top, and are delicately serrated along the margin; in many varieties *setæ* or hairs abound at their base. The leaf is traversed longitudinally by a number of veins. The midrib is generally white, but sometimes reddish or purple, and is formed with a channel-like depression in its upper surface. Leaves at maturity fall away from the stalk, and in some varieties separate themselves entirely.

Structure of the Leaf.—In *Fig.* 4 is shown a cross section of a leaf of the cane, to which must be added Dr. Cobb's explanation of the plate.[2]

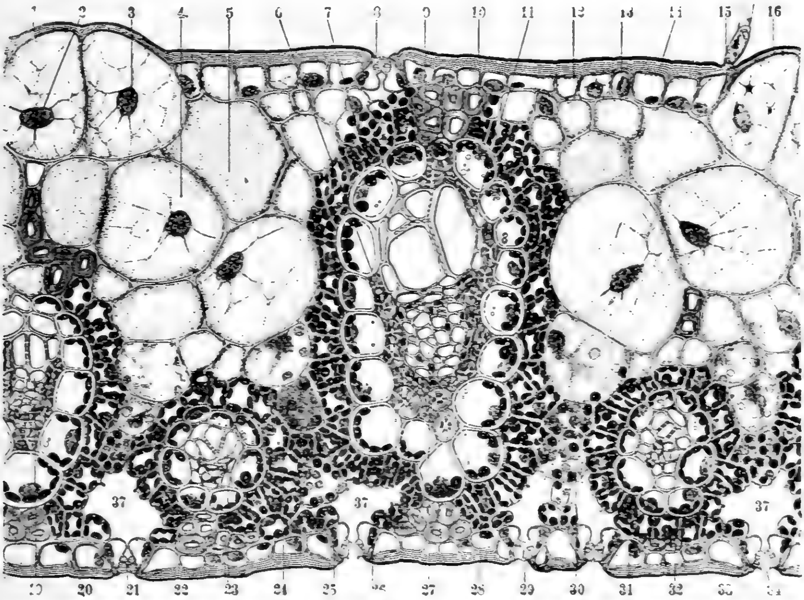

FIG. 4

"Cross-section of a portion of healthy cane leaf taken half-way between the midrib and the margin near the middle of a full-grown but not yet fully lignified leaf. The upper side of the figure, 1 to 18, represents the top surface of the leaf. The fructifications of the leaf-splitting disease occur in positions corresponding to 3, 4, 5. The green chlorophyll bodies are here shown black. It is owing to the destruction of these green bodies in portions of the leaf such as here represented, namely, between the largest vascular bundles, that the leaf takes on a striped appearance. The part of the leaf to be examined was fixed with the vapour of osmic acid while still attached to the cane plant. The fixed portion was differentiated into glycerine and cut in that condition. The drawing was projected from a photograph and sketched. The details were drawn in from the examination of sections either unstained or stained with aniline safranin. The section shows five fibro-vascular bundles, the largest of which is indicated at 6 to 11, the smallest at 23 and 32. Portions of the other two, which are intermediate in size, are shown at 19 and 36. None of these bundles are of the largest size. Bundles fully twice the size of the larger here shown occur in the cane leaf, and such large bundles are characterized by the possession of annular vessels, none of which occur in these smaller bundles. Throughout the illustration structures of the same class are indicated by a similarity in the draughtsmanship; thus the woody cells indicated at 9 are repeated in various parts of the figure, more particularly next to the epidermis of the lower surface.

" 1, a set of so-called motor cells, in this instance composed of two cells, whose nuclei are pointed out at 2 and 3 ; 4, an internal cell of somewhat similar character to that pointed out at 1, 2, and 3 ; 5, another cell of the same class cut in such a way that the nucleus has been removed ; 6, sclerenchymatous cells imparting strength to the fibro-vascular bundle ; 7, one of the layer of parenchymatous cells rich in chloroplasts and immediately surrounding each fibro-vascular bundle ; 8, one of the stomata, found more rarely on the upper than on the lower surface of the leaf ; 9, woody cells imparting strength to the cane leaf, and occurring on the dorsal and ventral side of each fibro-vascular bundle ; 10, one of the cells constituting the sheath of the vascular bundle—these cells contain chloroplasts arranged along the outsides of their walls ; 11, tracheal vessel ; 12, one of the cells of the upper epidermis ; 13, nucleus of a similar cell ; 14, upper cuticle at its usual thickness ; 15, a two-celled hair on the surface of the leaf ; 16, thinner cuticle of the upper surface of the leaf as it occurs over the so-called motor cells ; 17-18, group of so-called motor cells, consisting in this case of four cells ; 19, fibro-vascular bundle of intermediate size ; 20, chloroplast in one of the cells of the lower epidermis ; 21, one of the stomatic openings that are abundant on the lower surface of the leaf ; this one is closed—an open one may be seen at 25-26 ; 22, accessory (?) cell of the stomatic opening ; 23, one of the smallest fibro-vascular bundles ; 24, one of a group of cells very rich in protoplasm, which extends between the vascular bundles—the nearer these cells are to the lower epidermis the denser their protoplasmic contents ; 25-26, protoplasts in the guard cells of the stomatic opening ; 27, one of the sieve tubes—among these sieve tubes may be seen the smaller companion cells and their protoplasts ; 28, extra chlorophyll-bearing cells outside the single layer surrounding the vascular bundle ; 29, lip of one of the stomatic guard cells ; 30, cell rich in protoplasm, of the same class as 24 ; 31, nucleus of one of the companion (?) guard cells ; 32, fibro-vascular bundle of small size ; 33, apparently a locule in the thickened portion of the wall of the stomatic guard cell ; 34, entrance between the guard cells of the stomatic opening ; 35, cuticle of the lower surface of the leaf ; 36, fibro-vascular bundle of intermediate size ; 37, 37, 37, air chambers immediately above the stomatic openings. Throughout the illustration the nuclei are shown grey, and the nucleoli black. The tissue represented at 24 and 30 is probably primary leaf-tissue, from which during the growth of the leaf the various tissues represented have been differentiated."

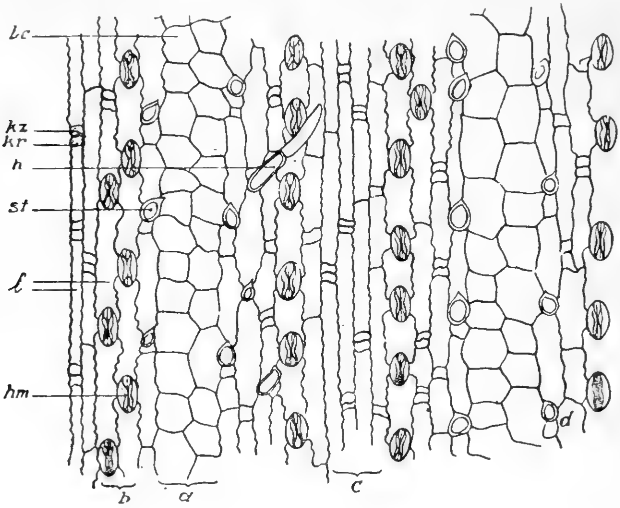

FIG. 5

In *Figs.* 5 and 6 are shown, after Dickoff,[3] the upper and under side of the leaf highly magnified, the legend being as under :—*l*, long cell ; *kz*, silica cell ; *kr*, cork tissue cell ; *hm*, stoma ; *bc*, air cell ; *h*, hair ; *st*, spine.

Function of the Leaf.—The leaf is the manufactory of the plant in which the processes of metabolism mainly take place. To begin with, the green tissues of the leaf take up carbon dioxide from the air through the stomata, which in combination with the water transported by the roots and vascular system forms carbohydrates, oxygen being returned to the atmosphere. At the same time nitrogenous bodies are formed through the union of the carbohydrates with the nitrates brought up dissolved in the soil water. The compounds so formed are also transported to other parts of the plant, mainly the stalk. A third function of the leaf is the transpiration of water which takes place through the stomata.

Physiology of the Leaf.—The physiology of the cane leaf has been studied mainly by Went[4] and by Kamerling[5] in Java, the latter extending and modifying some of the conclusions reached by the first named. It appears that cane sugar is the first product of metabolism occurring in the leaf, but if more carbohydrate is formed than can be transported to the stem, then the excess appears as starch, which is stored during the daytime in the chlorophyll granules. During the night, or even on a cloudy day, the starch is converted into reducing sugars, and in this form is transported to the stem. The presence of large quantities of starch can be demonstrated in leaves cut just before sundown, and, conversely, its almost complete absence can be shown in leaves cut just before sunrise. At the same time an increase amounting to 15 per cent. takes place in the weight of the leaf during the daytime, this increase being lost during the night. Similarly the greater part of the growth of the stem takes place during the night.

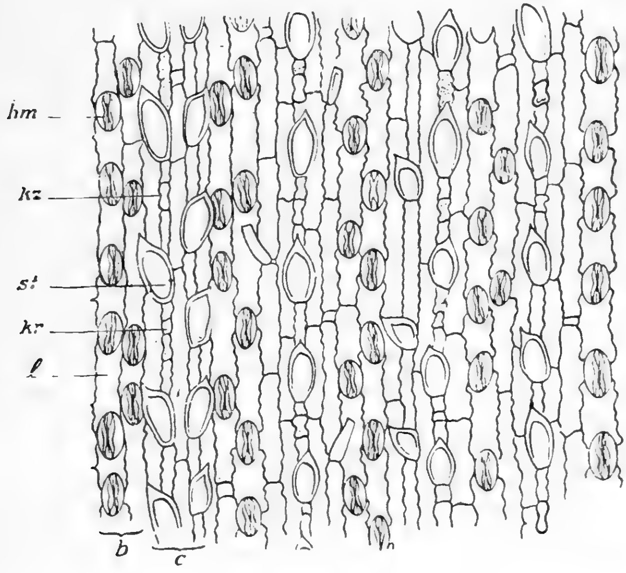

FIG. 6

The Root System of the Cane.—On planting an eye of the cane, germination takes place and a single mother stalk forms. The underground portion of the stalk forms itself into a rhizome or woody short-jointed prolongation of the stalk containing at each node a dormant eye. As growth proceeds new shoots form from this rhizome until the whole stool of cane is formed. It is possible, too, that in the first year's growth the shoots formed from the first original rhizome may send out shoots from the rhizomes that they themselves form. On cutting down the stalks at harvest the underground portion of the plant is stimulated to send out shoots from the dormant eyes and the first ratoon crop begins. This process may be repeated indefinitely, the limit of successive crops from one planting being very great. In this process, the original rhizome does not necessarily die when the first stalk is cut, and third, fourth or even later ratoon crops may contain stalks still springing from the rhizome formed from the original cutting, but the tendency is for the older parts to die away. *Fig.* 7 shows, after Auchinleck,[6] a combination of rhizomes as found in a ratoon crop.

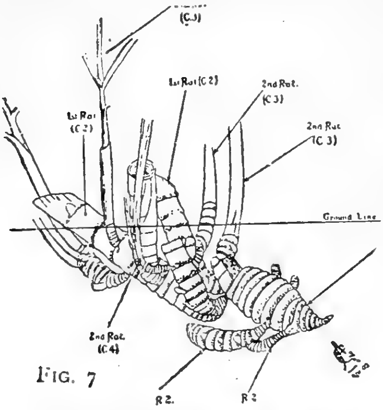

FIG. 7

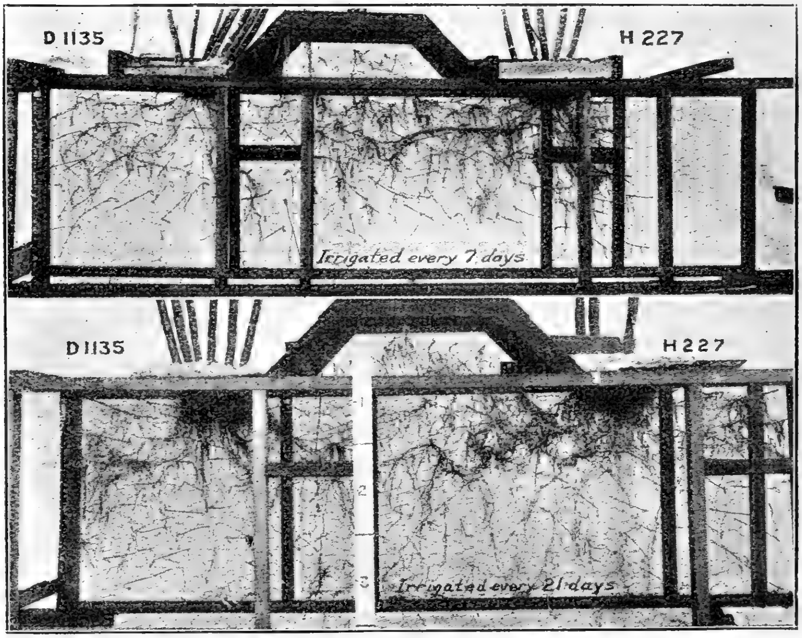

FIG. 8

The roots of the cane spring from the nodes of the stem; they are fibrous, lateral, and very delicate; they ramify in all directions, generally extending from 18 inches to 3 feet from the stem. Stubbs[7] says that the roots do not penetrate very deeply, but Ling Roth[8] mentions roots extending as far downwards as $4\frac{3}{4}$ feet,

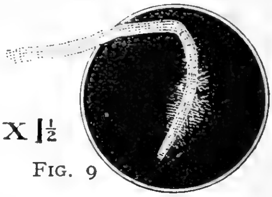

FIG. 9

and Liversedge[8] states that he has seen roots as far down as 8 or 10 feet. The depth to which roots penetrate, however, depends largely on the nature of the soil; they extend furthest in light porous soil. In seasons of drought the roots extend downwards following the water level; on the other hand, in fields with a sour, ill-drained subsoil, the roots after penetrating downwards turn back on themselves to the upper surface soil. The cane has no tap root, and its roots have comparatively little hold on the soil. *Fig.* 8, after Agee, shows the development of the root system as found on irrigated soil in the Experiment Station at Honolulu.

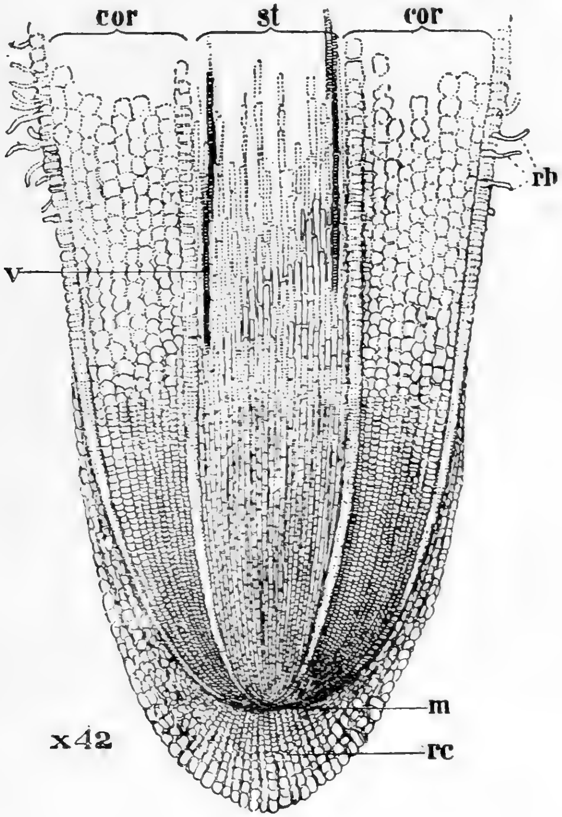

FIG. 10

Structure of the Root.—In *Fig.* 9 is shown to a scale of $1\frac{1}{2}$ the end of one of the roots growing in that part of the stem of the cane below ground. Towards the end of the root are seen numerous very fine hairs, and at the extreme end is seen the root cap. In *Figs.* 10 and 11 are given longitudinal and cross-sectional views of the root, the longitudinal view being taken through the apical point; *rc* is the root cap, *m* is the layer of meristematic tissue, *rh* root hairs formed from the piliferous layer on the extreme outer layer of the root; *cor* is the cortex, *st* the central cylinder, *v* a developing wood vessel, and *x* a larger wood vessel.

The root cap on the exterior consists of dead cells, and is continually being renewed from the interior by the layer of meristematic tissue from

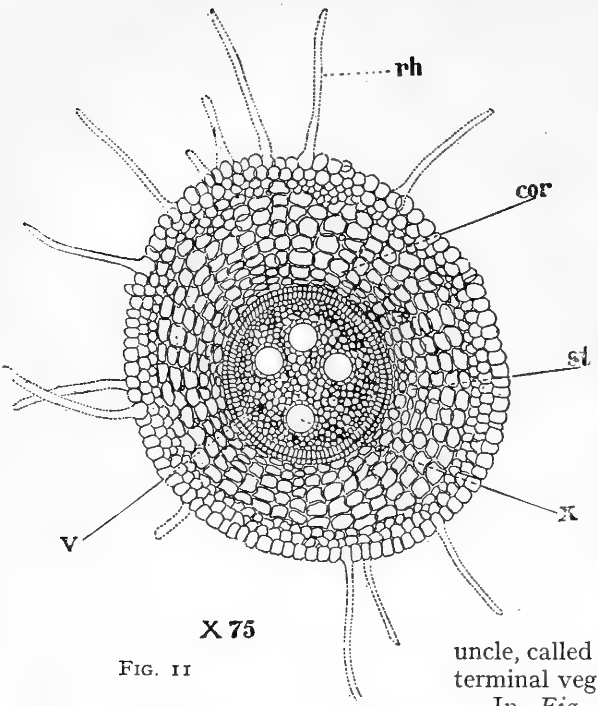

Fig. 11

which also arise by a continual process of cell subdivision all the other tissues of the root.

Function of the Root.—The functions of the root are two-fold: the root hairs closely envelop particles of soil, thereby maintaining the hold of the plant on the soil, and, secondly, the root hairs absorb water and plant food from the soil and transmit it to the other parts of the growing plant.

The Flower.—The inflorescence of the cane is a panicle of soft silky spikelets, borne on the end of an elongated peduncle, called the *arrow*, arising from the terminal vegetative point of the cane.

In *Fig.* 12 is given a drawing after Cobb,[2] enlarged 30 diameters, of a single flower of Lahaina cane. At 1 is the ovary, the growth of which produces the seed; it is ovoid and sessile. From the ovary proceed two styles of a reddish colour, bearing the plumose stigmas, 2. At 3 are the three anthers which produce the pollen, that serves to fertilize the stigmas; at 4 are the two lodicules, the function of which is, by swelling at the proper time, to open the cane blossom; at 5 is the innermost palet of the cane flower, and at 7, 6 and 8 the remaining palet and the glumes; at 9 are the bristles that surround the base of the flower. It is only exceptionally that the cane forms fertile seed. Some varieties never flower, and others do so only in the tropics. The age at which the cane flowers varies from eight to fifteen months, and is dependent on variety and climate and also on the time of planting. Flowering takes place at certain definite

Fig. 12

times of the year, varying in the different cane-growing regions, and if the cane is not sufficiently mature at the flowering time in its first year, no formation of flowers occurs until the second year. In this way a delay of a few weeks in planting will retard flowering for twelve months.

The pollen grains magnified 360 times are shown in *Fig.* 13, after Willbrink and Ledeboer[9]; *a* is a ripe pollen grain, shown also germinating at *b*; *c* and *d* are young unripe pollen grains; *k* is the germ pore; the exine is shown at *e* and the intine at *i*. The pollen grains are small yellow, nearly spherical bodies; the outer wall, the exine, is of cork tissue and has an opening, *k*, the germ pore. The inner wall, the intine, is of pure cellulose and has no opening. When ripe the interior of the pollen grains are filled with starch and are opaque, but when unripe the interior is bright and transparent.

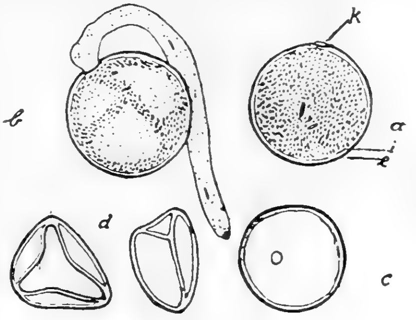

FIG. 13

REFERENCES IN CHAPTER I

1. "The Sugar Industry in the United Provinces of Agra and Oude."
2. H.S.P.A. Ex. Sta., Path. Ser., Bull. 2.
3. Van Deventer's " De Cultuur van het Suikerriet op Java."
4. *Java Arch.*, 1896, 4, 525.
5. *Java Arch.*, 1904, 12, 772; 1905, 13, 306.
6. *Agric. News*, 1914, 13, 231.
7. Stubbs' " Sugar Cane."
8. Newlands' " Sugar."
9. Van Deventer's " De Cultuur van het Suikerriet op Java," p. 62.

CHAPTER II

THE COMPOSITION OF THE SUGAR CANE

In writing of the composition of the cane, distinction must be made between the stalks and the whole plant, including therein the leaves, tops and underground system. The composition of the former is of major interest to the manufacturer, while the agriculturist is more concerned with the composition of the whole crop.

Distribution of the Crop as between Stalks and Leaves.—A very complete account of the distribution of the crop as between stalks on the one hand and tops, leaves, and dead cane on the other, was made by Maxwell[1] in Hawaii in connection with a number of varieties. Excluding certain abnormal figures, the dry matter in the stalks amounted to 45 per cent. of the entire crop, the leaves, etc., accounting for 55 per cent. This analysis of the crop did not take into consideration the root system, which Kobus has estimated at two to three tons of dry matter per acre, whereby the proportion of dry matter in the stalks would be reduced to the neighbourhood of 40 per cent. of the entire product.

Composition of Different Parts of the Cane.—Analyses due to Agee and Halligan[2] of Louisiana cane gave the results below :—

		Stalks per cent.	Roots per cent.	Seeds per cent.	Leaves per cent.
Water		74·96	68·79	11·03	74·38
Ash		0·64	1·87	5·22	2·23
Fat and Wax		0·38	0·54	2·01	0·69
Nitrogenous bodies		0·58	1·59	8·47	1·70
Fibre	Crude cellulose	4·86	9·58	25·51	9·18
	Pentosans	3·04	7·04	26·26	5·49
	Ligneous bodies	2·14	4·25	21·50	4·13
Sugars, etc.		13·40	6·34	—	2·20

Combining these results with those quoted in the preceding section, it is easy to see that the very great part of the material removed from the soil is contained in that part of the crop which remains on the land.

The Quantity of Sugar in the Cane Stalks.—The sugar in the stalks varies between very wide limits and is affected by variety and by conditions of growth. The earliest analyses made were those of Casaseca[3] in Cuba, and the classical analysis is that due to Payen,[4] who, working on material sent to France from the West Indies, and in the absence of a polariscope, found the percentage of sugar to be 18. Other early French workers obtained similar results, the maximum recorded being 26 per cent. It is unfortunate that these results have been copied from book to book right down to the immediate present as general averages. In respect to single canes, the composition will be found to lie within the limits :—Water, 69 to 75 per cent. ; Cane sugar, 7 to 20 per cent. ; Reducing sugars, 0 to 2 per cent. ; Fibre, 8 to 17 per cent. ; Ash, 0·3 to 0·8 per cent. ; Organic non-sugar, 0·5 to 1 per cent. The upper limit of 20 per cent. for cane sugar is only reached in exceptional cases, and has but once been found by the writer in the analysis of stalks selected for special purposes.

Taking crop averages, very great differences between different districts are to be observed.[5] In the Hawaiian Islands for the years 1908 to 1915 the average sugar content of the whole crop was 14·18 per cent. On the island of Maui, where the crop is almost exclusively irrigated Lahaina cane, the sugar content over the same period was 15·49 per cent., the extremes being 14·94 per cent. and 16·00 per cent. The highest plantation crop average was 16·61 per cent., and the highest weekly average on a plantation was 18·24 per cent. On the island of Hawaii, where the crop is almost entirely Yellow Caledonia cane grown under natural conditions, the average for the stated period was 13·26 per cent., with extremes of 13·92 per cent. and 12·72 per cent.

Statistics from Java are very complete. The figures for the years 1906 to 1912 gave 12·50 per cent. as the crop average over the whole of Java, with extremes of 12·16 per cent. and 13·11 per cent. Individual plantations show extremes varying from under 10 per cent. to over 15 per cent. For the year 1914-15 the average sugar content of the cane harvested at 151 mills in Cuba was 12·98 per cent., the extremes recorded being 10·0 per cent. and 15·3 per cent., both occurring on very small plantations. Statistics from 34 Mauritius factories for the year 1914 gave an average of 13·36 per cent., with extremes of 12·73 per cent. and 14·97 per cent.

Of the other large cane-growing districts, the occasional records that appear from Peru indicate that the cane grown there under irrigation equals that in the most favoured parts of the Hawaiian Islands. Australia is another country where cane of high sugar content is found. At the other extreme may be placed the widely separated districts of Argentina, Louisiana, and Demerara, where a sugar content of 11·5 per cent. is probably above the crop average.

The percentage of sugar in the cane though to a great extent dependent on variety is also affected by conditions of soil and climate. Accepting the identity of the varieties known as Bourbon, Lahaina, etc. (*cf.* Chapter IV), attention may be directed to the very great differences in composition observed between these canes as grown in Hawaii and Mauritius, and in Demerara. As varietal differences when conditions of growth are constant, the case of the Lahaina and Yellow Caledonia canes in Hawaii may be cited, the former containing at least a percentage more of sugar than the latter. Among older canes of repute as of high sugar content may be quoted the Otaheite and the light and dark coloured varieties of the Java or Cheribon canes. To these may be added the recently introduced Badilla cane grown to some extent in Australasia. At the other extreme come such canes as the Cavengerie, the Salangore and the Elephant cane. Of the seedlings, many have been selected on a sugar-rich basis, and of these there are D 74 ; P.O.J.100 ; B 208 ; H 10. Others, such as D 625, D 1135 and Bouricius 274, though not of high sugar content, remain in cultivation because of other desirable characteristics.

Distribution of Sugar in the Cane.—By far the most detailed analyses of the cane, joint by joint, are those that have been made by Went[6] in Java. One series of his analyses of ripe twelve-months old plant cane is given below :—

COMPOSITION OF THE CANE JOINT BY JOINT (WENT).

Number of the Joint.	Weight Grams.	Sucrose per cent.	Reducing Sugars per cent.	Number of the Joint.	Weight Grams.	Sucrose per cent.	Reducing Sugars per cent.
1	72·0	12·1	0·6	17	78·5	17·3	0·25
2	91·0	13·0	0·5	18	74·0	17·5	0·26
3	110·0	13·7	0·6	19	65·5	17·4	0·27
4	120·0	14·0	0·5	20	61·0	17·8	0·26
5	118·0	14·8	0·5	21	62·5	17·4	0·24
6	114·5	14·7	0·45	22	58·0	17·0	0·23
7	104·5	15·2	0·4	23	53·5	17·1	0·24
8	102·0	15·4	0·4	24	43·0	16·8	0·28
9	81·5	15·8	0·33	25–26	64·0	15·7	0·29
10	73·0	16·3	0·33	27–28	44·0	13·5	0·27
11	84·5	16·2	0·35	29–30	37·5	13·0	0·29
12	81·5	16·5	0·34	31–33	43·5	11·6	0·4
13	82·0	16·4	0·30	34–36	37·0	9·9	0·6
14	76·0	17·1	0·29	37–45	43·5	5·7	0·8
15	82·5	17·2	0·29	Average	74·77	15·31	0·38
16	84·5	17·2	0·24				

The variation in composition of the juice in the nodes and internodes is shown in the following analyses due to Bonâme[7] :—

Nodes ..	Sugar, per cent.	13·34	12·74	16·73
	Reducing Sugars, per cent. ..	0·29	0·28	0·31
Internodes	Sugar, per cent.	16·51	16·80	19·72
	Reducing Sugars, per cent. ..	0·60	0·84	0·48

Stubbs[8] gives the following as the result of analyses of twenty stalks of purple cane :—

	Brix.	Sugar. per cent	Reducing Sugars. per cent.	Non-Sugar. per cent.	Fibre. per cent.
Nodes ..	15·94	12·6	0·13	3·21	16·5
Internodes ..	17·40	15·5	0·94	0·96	8·0

The great variation in composition of the juice at nodes and internodes is well shown in the examples quoted above, whereby an explanation is given of the decreased sugar content of the juice afforded by the later mills in a train, the more woody parts only yielding their juice at higher pressures. The matter is further discussed in Chapter XI.

The Proportion of Sugar to Solids in the Cane.—The juice extracted in hand mills from selected individual canes sometimes shows a purity as high as 97. This juice comes, however, almost entirely from the pith cells and does not represent an average. In the case of crop averages, the purity of the "mixed juice" in the Hawaiian mills for the years 1911 to 1914 was 84·9, with an extraction of 96·4 per cent. of the sugar in the cane. The highest recorded figures for these years were over 90, and came from irrigated Lahaina cane. In Java, for the years 1906 to 1911, with an extraction of 90·9, the purity averaged 83·9 in the mixed juice, with many examples under 80. In Mauritius for the year 1914 the mixed juice was of 84·6 purity, with an extraction of 90·8. Not dissimilar results are to be found in Peru and in Cuba. At the other extreme are the results obtained in Louisiana, Argentina, Egypt, and Demerara, where, with lower extractions, average purities but little over 80 are found. In the last-named district the writer has experienced purities at the beginning of the crop of less than 70.

The Reducing Sugars of the Cane.—The reducing sugars present in the cane consist almost wholly of glucose and fructose. Both of these are present as intermediate bodies used in the formation of cane sugar, and in damaged and overripe cane as degradation products of the cane sugar. At different stages of the plant's growth the relative quantities vary. Geerligs,[9] and Browne and Blouin[2] have both shown that fructose is used up more rapidly than glucose, and that it therefore tends to disappear. In exceptional cases it may be entirely absent leaving only glucose, as was observed by Went.[6] In still rarer instances the glucose in turn is completely assimilated, so that very occasionally canes are found with no reducing sugars ; such a case has been recorded by Wiley.[10]

As the cane arrives at the mill the percentage of reducing sugars will be found to vary from a minimum of 0·3 to a maximum of 2. The former is found with very ripe irrigated Lahaina cane, while the latter occurs in Louisiana, where the cane never becomes ripe, and in equatorial districts, such as Demerara, where the crop contains material in all stages of growth. The Uba cane grown in Natal is a variety characterized by a very high percentage of reducing sugars.

The Fibre of the Cane.—By fibre is understood that portion of the cane insoluble in water. The term corresponds to the " marc " of beet sugarhouses. Browne and Blouin[2] found the fibre of Louisiana cane to be made up of :—

	PITH. per cent.	BUNDLES. per cent.	RIND. per cent.
Ash	1·68	3·58	1·64
Fat and Wax	0·41	0·72	0·98
Cellulose (Cross and Bevan) ..	49·00	50·00	51·00
Pentosans (Furfuroids) ..	32·04	28·67	26·93
Lignin (by difference)	14·93	15·03	17·17
Protein	1·94	2·00	2·19

The quantity of fibre in the cane as it reaches the mill is distinctly a varietal characteristic, and is also affected by age and conditions of growth. In Hawaii, for the years 1908 to 1917, the average percentage of fibre was 12·58, herein being included that of the trash accompanying the cane. This average refers to both Lahaina and Yellow Caledonia cane, the percentages in these being respectively about 11·5 and 13·5. In Cuba, where the crop is almost entirely Crystalina cane, the crop average seldom reaches 11 per cent., and at the beginning of the season is generally below 10 per cent. In Java, for the years 1904 to 1912, the average was 11·95 per cent., and here as in Hawaii the harvest is divided between two varieties, one P.O.J.100, with a low percentage, and one Bouricius 247, with a high percentage of fibre. In Mauritius, for the year 1914, the average of 34 mills was 12·04 per cent. The cane grown in sub-tropical Louisiana contains a very low percentage of fibre. The highest figure is reached in the Uba cane, which normally contains from 16 to 17 per cent. of fibre.

The Nitrogenous Constituents of the Cane.—Nitrogen is found in the cane as albuminoids, including herein albumen, nuclein, albumoses and peptones, amido acids, amides, nitrogenous bases, and nitrates and ammonia salts. Following on investigations of German origin on the beet, the five last-mentioned constituents have received the rather inappropriate qualification of "objectionable," indicating thereby that they are not removed in the processes of purification, and hence increase the quantity of molasses. Referred to dry matter, Maxwell found the total nitrogen in leaves, tops, and dead cane to be 0·521 per cent. as an average over a large number of varieties, the extreme values being 0·427 per cent. and 0·599 per cent. Taking the stalks alone, he found an average of 0·461 per cent., with extremes of 0·207 per cent. and 0·530 per cent. Combination of these results with those quoted above would indicate that about 65 per cent. of the nitrogen is to be found in the waste products, and 35 per cent. only in the stalks.

In the cane stalks themselves, Browne and Blouin[2] found the distribution of the nitrogenous bodies as shown below:—

	Per cent. of Cane.
Albumen (coaguable and soluble in pepsin)	0·059
Nuclein (coaguable and insoluble in pepsin)	0·040
Albumoses and peptones (not coaguable)	0·033
Amido acids as aspartic acid	0·145
Amido acid amides, as asparagine	0·232
Ammonia as NH_3	0·008
Nitric acid as N_2O_5	0·071
Total nitrogenous bodies	0·588

The identity of the nitrogenous bodies remains open to question. Shorey[11] isolated a body which he identified as glycocoll; but Zerban[12] with a similar procedure found only asparagine. After removal of the albuminoids, and by precipitation with phosphotungstic acid, Shorey obtained a mixture of lecithins, the alkaloidal bases of which he identified as betaine and choline. The only xanthine base he found was guanine. In addition to asparagine, Zerban also isolated glutamine and tyrosine, these two bodies being present in much smaller quantity than asparagine.

The Ash of the Cane.—As with the other constituents, distinction must be made between the ash of the stalks and that of the leaves, roots, etc. Maxwell's analyses of Hawaiian cane already referred to gave 3·2 per cent. of ash in the stalks and 9·5 per cent. in the leaves, etc., both calculated on dry matter; and Popp[13] in some very early work found 4·05 per cent. ash in the stalks and 8·25 per cent. in the leaves.

The earliest analyses on record are those due to Stenhouse,[14] and since then very many have been made. Some analyses are vitiated since it is not stated to what basis the analysis refers, stalks, leaves or whole plant. A selection from the very large number on record is given below and covering the extreme variations in composition. This variation will be controlled by variety, the composition of the soil, and by the manures used. The only features of constancy are the preponderance of silica in the ash of the leaves and of potash in the stalks.

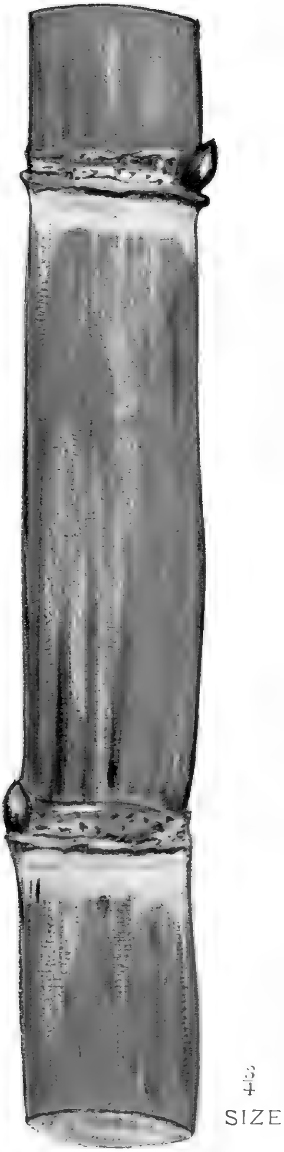

ROSE BAMBOO.

COMPOSITION OF SUGAR CANE ASH.

	1	2	3	4	5	6	7	8	9	10	11	12	13
Silica ..	56·09	18·09	53·38	28·69	78·5	52·8	56·76	53·54	65·78	43·75	30·32	15·70	49·52
Titanic Acid ..	1·14	..	0·69	..	..	..	..	..	..	..	..	..	..
Phosphoric Acid	1·50	9·12	1·28	7·46	1·0	14·7	10·63	10·78	1·25	5·45	7·25	5·27	3·99
Sulphuric Acid	5·34	5·64	5·10	4·15	2·4	2·4	2·60	0·53	2·18	16·53	11·29	18·47	9·15
Chlorine ..	2·50	5·45	4·03	8·67	0·3	0·3	0·20	0·92	1·65	0·21	3·08	4·55	0·98
Ferric Oxide ..	6·47	7·43	4·04	3·25	0·7	0·5	..	..	0·85	0·56	1·45	1·13	3·60
Alumina ..	2·13	12·21	1·81	3·65	..	..	..	..	..	..	1·03	0·25	4·70
Manganese Oxide	0·27	..	0·10	..	..	..	..	..	..	..	..	..	..
Lime ..	5·62	3·85	6·02	4·08	4·7	2·7	6·50	3·24	8·19	12·53	5·90	5·19	3·45
Magnesia ..	4·58	6·06	4·42	5·91	2·3	2·1	5·08	3·22	2·45	6·61	5·11	5·76	2·61
Potash ..	13·44	28·99	17·11	32·26	8·5	23·0	22·56	25·63	10·69	7·66	31·25	38·23	17·39
Soda ..	1·66	3·40	1·37	2·70	1·7	1·5	5·67	2·56	3·26	6·45	1·17	1·30	0·85
Carbon ..	..	..	..	..	..	..	..	..	..	..	0·16	0·54	2·30

1. Lahaina cane, leaves, tops and dead cane. **2.** Lahaina cane, stalks. **3.** Yellow Caledonia cane, leaves, tops and dead cane. **4.** Yellow Caledonia cane, stalks. Analyses due to Maxwell[1] in Hawaii. **5.** Cheribon cane, leaves. **6.** Cheribon cane, stalks. Analyses due to Van Lookeren Campagne[15] in Java. **7** and **8.** Stalks of Mauritius canes. Analyses due to Bonâme.[16] **9.** Leaves of Egyptian canes. **10.** Stalks of Egyptian canes. Analyses due to Popp.[13] **11.** Leaves of D 74 cane. **12.** Stalks of D 74 cane. **13.** Roots of D 74 cane. Analyses due to Hall[2] in Louisiana.

Organic Acids of the Cane.—In earlier researches a great number of organic acids have been stated to be present in the cane, many of which have not been found by later workers. The most detailed investigation is due to Yoder,[17] who, in Louisiana, found per 100 c.c. of cane juice 0·05 gram aconitic acid, 0·00077 gram malic acid, and 0·00004 gram oxalic acid. He did not find tartaric, citric or succinic acids. On the other hand, citric acid was positively identified and isolated in quantity by Shorey[18] from the deposit on the tubes of an evaporator working up juice from canes in Hawaii which had been damaged by a long drought. Acetic acid is a constituent of damaged cane. The original recognition of aconitic as the dominant acid is due to Behr,[19] in 1877.

Gums.—These bodies, also referred to as pectin and alcoholic precipitate, are of uncertain composition. They occur in the cane up to 0·2 per cent., and are present in largest proportion in unripe cane. They are insoluble in acidified alcohol, and are absorbed by animal and vegetable carbons. They are derived from the hemicelluloses of the fibre and consist chiefly of xylan, araban and galactan. Part are precipitated in manufacture and part find their way to the molasses.

Wax.—This mixture of bodies, first observed by Avequin,[20] occurs on the exterior of the cane. It may amount to 0·05 per cent. of the cane, and in some varieties is almost absent. It has been exhaustively studied by Wijnberg[21], who finds that 70 per cent. of the crude body consists of glycerides of oleic, linolic, palmitic, and stearic acids, together with hydroxy-acids, resin acids, lecithins, phylosterol, aromatic and colouring matters. The remaining 30 per cent. contains about 45 per cent. of myricyl alcohol and 35 per cent. of a non-primary crystalline alcohol. These data refer to the benzene soluble bodies. Cane wax has now become an article of commerce.

Other Constituents.—Other constituents present in very small quantities but of technical importance are colouring matters, of which chlorophyll, anthocyan, the blue or red pigment in coloured canes, and saccharetin are the chief. Amongst these should also be included the tannins or polyphenols, mainly resident in the tops and eyes; these were first observed by Szymanski,[22] and have since been studied by Narain[23] and Zerban[24]. The latter finds that the cane tannin or polyphenol is a derivative of pyrocatechin allied to the oak tannins, and to be placed in Class 1*a* of Proctor's classification.[25]

Various enzymes are also known to exist in the cane. Browne[2] found an invertase mainly resident in the tops, and Raciborski[26] identified a laccase and peroxidase, to which Zerban[27] has added a tyrosinase.

REFERENCES IN CHAPTER II

1. H.S.P.A. Ex. Sta., Agric. Ser., Bull. 9.
2. La. Ex. Sta., Bull. 91
3. *Ann. Chim. Phys.*, 1844, 11, 39.
4. Memoires de l'Academie des Sciences, 1850, 22, 509
5. Quoted from Experiment Station and Government publications
6. *Java Arch.*, 1896, 4, 525.
7. In "Cultur de la Canne à Sucre"
8. Stubbs' "Sugar Cane."
9. *S. C.*, 1897, 29, 207.
10. *S. C.*, 1889, 21, 484
11. *Jour. Am. Chem. Soc.*, 1897, 19, 881; 1898, 20, 113; 1899, 21, 809.
12. International Congress of Applied Chemistry, 1912
13. *Z. für Chem.*, 1870, 6, 329.
14. *Phil. Mag.*, 1845, 27, 533.
15. *Java Arch.*, 1894, 2, 113.
16. *S. C.*, 1894, 26, 622.
17. *Jour. Ind. Eng. Chem.*, 1912, 3, 643.
18. *S. C.*, 1894, 26, 67.
19. *Proc. Am. Chem. Soc.*, 1876, 1, 220.
20. *Ann. Chim. Phys.*, 1840, 75, 214.
21. *Jour. Soc. Chem. Ind.*, 1912, 28, 991.
22. Berichte des Vereins Station für Zuckerrohr in West Java 2 13
23. *Agric. Jour. of India*, 1918. Science Congress issue.
24. *Jour. Ind. Eng. Chem.*, 1919, 11, 1034.
25. *Jour. Soc. Chem. Ind.*, 1894, 13, 487.
26. *Java Arch.*, 1906, 14, 857.
27. *La. Plant.*, 1919, 61, 299.

CHAPTER III

RANGE AND CLIMATE

THE influence of climate on cane culture was probably first discussed by the Marquis de Cazaud in his " Précis sur la Canne," published in 1776. This work deals with Grenada, and, besides discussing climate and giving statistics of rainfall, is valuable as presenting a very detailed account of the agricultural operations as then carried out. A second publication is that of Sir W. R. Rawson[1] sometime Governor of Barbados, who collated the rainfalls of that island for the years 1842-71, and showed the dependence of the cane crop thereon. The latest study on this matter is that of Walter,[2] who has collected the very detailed records of the Royal Alfred Observatory in Mauritius, and shown the connection between temperature, rainfall and its distribution with the return per acre. Some of his work, which should be studied in the original, is referred to below.

The Geographical Range of the Sugar Cane.—The cane is essentially a plant that requires a high temperature and large quantities of water. The limits of its cultivation are perhaps best defined as lying between the isotherms of 68° F., which, independently of the tropics, are taken as defining the torrid zone. North of the equator and at 0° longitude this line starts at 36° N., and follows the North African coast, gradually falling to 28° N. as it leaves the continent and reaching this latitude at 80° E. It then runs parallel to the equator to 120° W., when it again rises to 36° N. as it meets the North American coast, and remains on this parallel until it meets the longitude of Greenwich.

The southern isotherm of 68° F. at 0° longitude lies at 18° S., whence it rises to meet the extreme west point of Africa at 14° S., and then abruptly falls as it crosses the continent, roughly paralleling the coast line until it reaches 25° S. It then crosses Africa in a line parallel to the equator, and, rising very slightly over the Indian Ocean, meets the Australian continent at 25° S., and, again running parallel to the equator, meets the Pacific Ocean at 100° W. It then rises sharply to strike the South American coast at 16° S., and then, receding from the equator, roughly follows the coast line to 28° S. in the centre of the continent, and rises again to meet longitude 0° at 16° S.

All the cane-producing areas lie within these limits except those of Spain, Southern Japan, and Northern New South Wales, which are located just on their fringes.

The localities where the cane forms a staple commercial product are :—

In Asia—British India (10°–30° N.), Java (6°–8° S.), the Philippines (5°–18° N.), Formosa (21°–25° N.), Southern China (22°–30° N.), and the more southerly islands of the Japanese Archipelago (30°–32° N.).

In Africa—Madeira (33° N.), Egypt (4°–30° N.), Natal and Zululand (28°–30° S.), Portuguese East Africa (10°–28° S.), and Mauritius and Réunion (19°–21° S.).

In America—Louisiana, with isolated instances in Arizona, Texas and Georgia (30°–32° N.), the whole of the West Indian Islands (8°–22° N.), including therein Cuba, Porto Rico, Santo Domingo and Hayti, Jamaica, Martinique and Guadeloupe, St. Vincent, St. Kitts, St. Lucia, St. Thomas, Virgin Islands, Barbados, Antigua and Trinidad; British and Dutch Guiana (6°–8° N.), Mexico and the Central American republics (8°–25° N.), Brazil (0°–23° S.), Argentina (22°–28° S.), Paraguay (20°–22° S.), Venezuela (0°–8° N.), and Peru (3°–18° S.).

In Australasia—New South Wales and Queensland (16°–30° S.), Fiji (15°–21° S.), and the Hawaiian Islands (18°–21° N.).

In Europe—Spain, in the extreme south-east (36°–37° N.).

Apart from these commercial centres the cane may be found growing as a garden plant in the Bahamas, Bermuda, Cape Colony, Mesopotamia, Persia and Arabia.

In the middle ages Sicily, Malta, Cyprus and the Levant were the centres of a considerable industry, and the seventeenth century saw an attempt to grow the cane in the south of France. It still survives in these localities. As a matter of curiosity it may be recorded that at the Great Exhibition of 1851, Dr. Evans showed sugar made from canes grown in Surrey, England, by Mr. H. Perkins.[3]

The Temperature of Cane-growing Districts.—As the cane is grown in countries widely differentiated, both as regards latitude and altitude, there is a wide variation in the conditions under which it is produced. The hottest localities are not those which lie at or near to the equator; such have a temperature distinctly lower than many a number of degrees remote therefrom. Actually the heat equator at 0° longitude lies close to 20° N. latitude. Passing east it leaves Africa at its most easterly point, 13° N., and then runs parallel to the equator, crossing southern India, whence it turns south and crosses the equator at 80° E. It remains south of the line to 120° W., when it rises abruptly to meet the American continent at 25° N. Crossing the continent it runs S.E. closely following the east coast of Central and South America, and leaves the most westerly point of the continent at 2° S. It then runs in a north-easterly direction till it again meets the parallel of Greenwich at 20° N.

The mean annual temperature in degrees Fahrenheit and that of the hottest and coldest months for each five degrees of latitude are thus given by Spitaler.*

	NORTH LATITUDE.							SOUTH LATITUDE.					
	30°	25°	20°	15°	10°	5°	0°	5°	10°	15°	20°	25°	30°
January	58·3	65·1	71·1	74·9	78·3	79·2	79·2	79·0	78·6	78·3	77·4	76·5	73·0
July ..	81·1	82·4	82·6	82·2	79·5	79·0	77·9	76·8	75·2	72·7	68·9	64·6	58·3
Year ..	68·5	74·7	78·3	79·3	79·5	79·1	78·6	77·9	77·0	75·6	72·9	69·6	65·3

These figures refer to the parallel as a whole, and generally continental areas exhibit greater extremes than do the maritime regions. The hottest localities occur in Africa, India, Central America and Northern Australia, where mean annual temperatures of 85° F. are recorded.

---

*These temperatures refer to sea level. The U.S. Dept. of Agric., Weather Bureau, assumes a fall of 1° F for each 325 feet rise in altitude.

Rainfall.—The two great climatic divisions as regards rainfall are the marine and the continental. The *marine,* which also extends inland, is characterized by heavy periodic rainfalls and by a high degree of cloudiness. The *continental,* on the other hand, possesses the feature of long periods of drought, with infrequent rainfall. Here belong the great desert areas of Africa, Asia and northern Australia. As belonging to this type should be placed the sugar-producing areas of Egypt, Peru, the lee side of the Hawaiian Islands and the small area in south-eastern Spain. In all these the industry is dependent on irrigation. In the marine climate lies the belt of equatorial rains, within which are included the land areas of the north of South America. The maximum fall here follows the sun as it moves across the zenith, and hence there are two wet seasons and two dry seasons. This distribution of rainfall is exemplified by the figures of the average precipitation at Georgetown (Demerara) for a period of 32 years.[4] The dry season extends from mid-August to mid-November, and again from February to April, the maximum rainfall occurring during the hottest months of the year.

AVERAGE RAINFALL AT GEORGETOWN, DEMERARA.

Month.	Inches.	Month.	Inches.	Month.	Inches.
Jan. ..	6·90	May ..	10·94	Sept. ..	2·80
Feb. ..	4·86	June ..	11·88	Oct. ..	2·36
Mar. ..	5·41	July ..	9·02	Nov. ..	5·65
Apr. ..	6·40	Aug. ..	6·98	Dec. ..	10·86

Monsoon Tract.—A very important climatic zone is that of the monsoons embracing the sugar-growing areas of Java, India and northern Australia. During the period May to October in regions south of the equator the south-east monsoon prevails, and this period forms the dry season. From November to April the north-west monsoon blows, and in these months the rainfall is heavy. North of the equator the seasons are reversed, and more remote from the equator in British India the monsoons give rise to three distinct seasons, a cool dry winter followed by a hot dry spell, which in turn gives way to a hot wet season lasting until the cool dry winter period arrives.

Java.—In Java, which lies within this climatic zone, there is a great difference in the precipitation experienced in the different sugar areas, as indicated in the following table (the mean of many years[5]), which also demonstrates the seasonal regularity of the fall.

RAINFALL IN THE SUGAR AREAS OF JAVA—INCHES.

Station.	Jan.	Feb.	Mar.	Apr.	May	June	July	Aug.	Sept	Oct.	Nov.	Dec.	Year
Cheribon ..	17·13	14·65	14·69	7·95	5·28	4·33	2·72	0·87	1·18	2·44	6·06	14·80	92·10
Semarang ..	14·61	14·13	8·90	7·36	5·04	3·35	3·11	2·56	3·70	5·39	7·28	10·47	85·90
Soerabaya ..	12·09	10·98	10·39	6·58	4·45	3·50	2·01	0·83	0·55	1·57	4·57	9·65	67·17
Pasoeroan ..	9·06	10·39	7·95	5·12	3·03	2·44	1·10	0·24	0·16	0·51	2·24	6·61	48·85
Probolinggo	9·25	9·69	6·10	3·98	2·52	1·77	0·79	0·39	0·16	0·47	2·44	6·46	44·02
Beznoeki ..	12·80	11·81	7·09	3·39	2·17	1·54	0·98	0·24	0·12	0·28	2·24	7·60	50·26
Banjoemas	13·35	11·50	13·35	10·04	7·68	5·55	4·06	2·99	3·66	12·17	17·13	17·95	119·43
Djokdjakarta	13·78	12·48	12·91	8·15	5·39	3·90	1·89	1·22	1·50	3·74	9·57	13·90	88·43
Soerakarta ..	12·87	12·95	11·81	8·03	4·88	3·86	2·24	1·85	1·81	4·06	8·78	10·51	83·65
Madioen ..	12·44	10·91	10·12	8·82	5·08	2·99	1·61	1·06	1·22	2·64	7·87	9·91	74·37
Djember ..	14·65	15·24	14·37	8·98	6·22	4·37	2·95	2·17	3·07	6·30	11·26	14·17	103·75
Sitobondo ..	10·67	8·66	6·30	2·36	1·97	1·14	0·63	0·16	0·16	0·75	2·05	5·79	40·63

West Indies.—A second great sugar-producing region, the West Indies, also has its climate divided into a wet and a dry season, the former as in the East Indies coinciding with the hot weather. Thus in Cuba the rains usually begin in May and continue to November, the period December to April being one of comparatively little fall. This whole area is not one of relatively heavy rain, as is shown by the statistics quoted below.[6]

RAINFALL IN CUBA FOR THE YEARS 1907–11.—INCHES.

Province.	1907	1908	1909	1910	1911
Pinar del Rio	39·75	75·39	84·96	82·55	78·61
Havana	25·05	49·10	52·44	46·60	41·76
Matanzas	43·85	53·12	73·74	45·60	58·36
Santa Clara	41·37	..	57·48	50·37	55·91
Camaguey	—	44·62	62·28	41·50	36·02
Oriente	34·31	57·34	55·91	21·75	36·88

In Barbados[7] the rainfall for the years 1898-1907 was as shown in the table below.

RAINFALL IN BARBADOS—INCHES.

Year.	Fall.	Year.	Fall.
1897	72	1903	66
1898	68	1904	58
1899	50	1905	54
1900	60	1906	70
1901	90	1907	47
1902	55	1908	44

In other of the West Indian Islands, notably Antigua and St. Croix, the precipitation is normally much less and often does not exceed 30 inches in the whole year. Trinidad, on the other hand, belongs to the equatorial rainbelt type.

Hawaii and Mauritius.—The climates of the Hawaiian Islands and of Mauritius and Réunion, lying equal distances respectively north and south of the equator, present certain points of interest and similarity. The windward side of Hawaii lies in a zone of nearly constant rainfall, the average at Hilo (40 feet) being 139 inches per annum,[8] with a remarkably even distribution; even more than this is registered at plantations in the same rain belt that lie at higher elevations. Thus the average fall at Onomea at 250 feet elevation is 189 inches, and for that very wet year, 1918, it reached 308 inches. At Olaa mill, 225 feet, the average fall is 153 inches, rising on the same plantation to 207 inches at 1530 feet elevation. At Hakalau, at the 1,200 foot elevation, it is 276 inches. These two last places, which lie on the extreme upper limits of cane cultivation, are probably the wettest where the cane is grown.

On the lee side of Hawaii and on the littoral of the other islands, Maui, Kauai and Oahu, the climate passes to the continental desert type, with an average fall of about 20 inches per annum at sea level. In the mountainous interiors of all the islands the fall is very heavy. This distribution is the effect of the moisture-charged north-east trade winds meeting the cold surfaces of the mountains. Similarly, the north and east of Mauritius belong to the continental desert type, the interior and south-west being in a zone of heavy precipitation. Averaged all over Mauritius[9] for the 40 years, 1863-1902, the fall was 79 inches, with extremes as in Hawaii all the way from 20 inches to 150 inches or more. In contradistinction to the general tropical rule in these islands, it is the cold season that coincides with the period of maximum precipitation.

Philippines.—In the Philippine Islands[10] the average over the whole archipelago is 74 inches per year. The west side presents the usual tropical phenomenon of a wet season, May to October, and a dry season, November to April. In the eastern half of the islands the rainfall is fairly evenly distributed, the least rain falling in the period February to April.

In Formosa the distribution is very irregular; at Keeling, in the extreme north of the island, the fall amounts to 200 inches, but in other parts cane can only be grown under irrigation. In Tucumán, in Argentina, the fall for the years 1855-96 averaged only 36·8 inches. In Australia, in the northern limit of cane cultivation, the fall is about 80 inches, decreasing to 40 inches at Bundaberg, near the southern limit. Fiji is a locality with a very heavy fall on the windward side, that at Suva averaging 130 inches; the climate there resembles that of the wet Hilo zone of the Hawaiian Islands. Of districts outside the tropics, Madeira has an average fall of but 28 inches, Louisiana resembles the tropic type; at New Orleans[11] for the years 1887-96 the fall averaged 59·8 inches, the extremes being 46·0 and 75·3 inches. Over the sugar belt the fall is rather greater, the maximum precipitation occuring in the summer months.

Failure of Rains.—Although, when averaged over a number of years, the fall in the tropics is very even, both as regards periodicity and quantity, the seasonal rains sometimes fail, leading to prolonged periods of drought. It is in India that the failure of the wet monsoon has become most notorious, as there it causes the occurrence of periodic famines. In the belt of equatorial rains similar seasonal irregularities are also known; thus at Paramaribo (Dutch Guiana) the fall in 1899 was only 48·8 inches, the average for the period 1897-1908 being 92·3 inches; the next lowest fall was 76·4 inches, in 1906. The whole island of Cuba is liable to prolonged droughts, such having happened in 1900 and 1908, and from the immensity of its production a very disturbing influence on the sugar market follows; in fact, almost every sugar-producing district is liable to suffer in this way. The island of Java seems to be most favoured in this respect if the relatively small areas of Hawaii near Hilo, and the windward side of the Fiji Islands be excepted. As a paradox it may be remarked that those localities that suffer least are the very arid regions which have developed systems of irrigation, as in Peru and the leeward sides of the Hawaiian Islands. On the other hand a great excess of rainfall may fall in a short time. Falls of 10 inches in a day do not excite comment in many parts of the tropics, and falls of as much as 20 inches in the same time are not uncommon; what is one of the greatest falls on record occurred at Suva in Fiji, on August 8th, 1906, when 41 inches fell in 13 hours. Prolonged spells of wet weather are also common, but the damage they occasion is but small compared with what is due to a prolonged drought.

Rainfall and Altitude.—Besides latitude, altitude has a great effect on rainfall, which invariably increases with elevation. The effect of altitude is shown in the following statistics dealing with the widely separated localities of Barbados, Java, and Oahu in the Hawaiian Islands.

BARBADOS—AVERAGE OF YEARS 1841–72.

Altitude, feet ..	..	6–200	200–400	400–600	600–800	800–1,000	Over 1,000
Rainfall, inches	..	44·0	46·0	52·0	58·5	58·6	70·3
Number of Stations	..	22	22	9	14	4	2

HONOLULU, FOLLOWING THE NUUANU VALLEY.

Altitude, feet	20	400	860
Rainfall, inches	24–36	90	143

RAINFALL AND ALTITUDE IN JAVA.

Locality	Batavia	Meester Cornelis	Posen Mongo	Depak	Bodjong Geelis	Buitzenborg
Distance from coast, miles	4	7	11	21	27	36
Altitude, feet	23	46	116	304	429	874
Rainfall, inches	71	71	96	120	146	174

Percentage of Moisture.—Connected with the rainfall is the humidity, and it naturally follows that places with heavy rainfall also have a humid atmosphere. Proximity to the sea is another important factor. At Honolulu, in a dry locality and near the sea, the average relative humidity for the year 1901 was 70·0, with extremes of 67·2 and 76·6. At Batavia, both wet and near the sea, the average for the years 1866-1900 was 82·8, with monthly extremes of 77·5 and 87·5.

The percentage of sunshine is another climatic factor of influence. It is least in the marine type of climate, and over the belt of equatorial rains only amounts to 45 per cent. of the possible, rising to 80 per cent. in localities, such as Egypt, that belong to the continental type.

Wind.—A climatic factor of a different type is that of wind. Generally the trade winds typical of the tropics blow with a steady velocity of about 10 to 20 miles per hour. When the wind reaches a steady velocity of 30 miles per hour a cyclone is officially recorded in Mauritius, and this island and the near-by one of Réunion are those which are most subject to these disturbances, the centres of forty-three cyclones having passed within one hundred miles of Mauritius during the years 1857-1908. Some cyclone damage obtains in Mauritius about one year in three, the cyclone of May 29th, 1892, being one of the most destructive ever recorded. All of the West Indies, with the exception of Trinidad, lie in the hurricane belt of the Caribbean Sea, while Formosa is exposed to the typhoons of the China seas. The Philippines just come within this region, and the crops there are occassionally damaged.

The Effect of Climate on the Cane.—The influence of temperature on the physiology of the cane is very complex. The rate of growth, the time to maturity, and the composition are all affected. In the more equatorial areas the temperature variation is so small that differences in the rate of growth are hard to detect. In the districts more remote from the equator the influence of the cold season is pronounced. Measurements made in Hawaii by Eckart[12] on a large number of varieties indicated that during the cold season the length of internodes was generally more than 30 per cent. and less than 50 per cent. of those formed in the hot season; the diameter of the stem was also less. The period taken for the cane to ripen is also dependent on temperature. In Demerara, Bourbon canes planted in December will arrow in the following September; in places lying near the tropic thirteen months is a common time. Walter[13] has observed that in Mauritius canes planted near to sea level reach maturity in thirteen months, whereas those planted at the 1100-foot level require twenty-one. From a zero of 70° F. he has calculated that in these periods the canes receive the same quantity of heat; that is to say, the product, " days × excess daily mean over 70° F.," is the same, and in this case has a numerical value of 1350.

The temperature range has a very important bearing on the composition of the cane. In those places that have a uniformly high temperature and no cool season, an impure cane of low sugar content and high in reducing sugars is almost invariably harvested. In such a case there is opportunity for continuous vegetative growth, and the crop as it reaches the mill will consist of canes in full vegetative vigour, of ripe, and of over-ripe canes. The non-sugars present will consist of products in process of metabolic change, and of degradation products formed from the breaking down of the cane sugar. In extra-tropical climates, such as in Louisiana, the limited period of growth affords a cane that does not have an opportunity to reach maturity. A juice low in solids, sugar and purity, and high in reducing sugars, results, the latter bodies representing material in course of transformation to cane sugar. A sweet and pure cane is found in those regions where a longer period is taken to maturity, combined with a season sufficiently cold to check the vegetative vigour of the plant, whereby its energy is directed towards the elaboration into cane sugar of material already in the process of transformation. Those localities lying on the confines of the tropics present these conditions, and when, as in the arid districts of the Hawaiian Islands and of Peru, water can be withheld from the plant and that in the plant can be transpired, the sweetest and purest material results.

The writer is aware of only one attempt to correlate temperature and composition, and this was made by Michaud[14] in Costa Rica. With due regard to the elimination of experimental and of personal error, he caused ripe canes of the Red Ribbon variety to be collected at various altitudes, the temperatures of which were known or could be interpolated. The latitude of Costa Rica is 8°–11° N., its coast line lying on the heat equator, and though the influence of rainfall is not included, the results tabulated below, with one exception obviously abnormal, agree with the remarks made immediately above, regarding the effect of temperature as controlled by latitude.

Effect of Temperature on the Composition of the Cane (Michaud).

Altitude feet	Temperature F°	Sugar per cent. cane	Water per cent. cane	Sugar per cent. juice	Solids per cent. juice	Purity
5,937	62·5	15·60	72·43	18·76	22·08	84·99
5,379	64·5	15·59	73·24	18·71	20·80	89·98
4,547	66·0	16·38	71·96	19·84	22·21	89·36
4,195	68·0	16·45	71·34	20·11	21·21	94·83
3,641	70·0	16·63	71·29	20·32	22·10	91·95
2,844	72·5	17·00	71·34	20·42	24·60	82·99
2,361	74·5	17·38	73·94	20·50	21·98	93·29
1,148	78·0	16·80	74·00	19·88	20·98	94·77
718	79·0	16·06	74·60	18·92	20·86	90·68
33	80·5	14·45	75·38	17·08	18·60	91·85

The effect of rainfall on the crop is more than a matter of the total fall, its distribution being of equal importance. It is at once patent that a fall of 10 inches in 24 hours is less beneficial than five precipitations of 2 inches separated by weekly intervals. Walter[15] in discussing this subject introduces the terms " inefficient rainfall " and " degree of wetness." The latter he defines as Rt^1/t where R is the rainfall, t is the days in a month and t^1 is the number of rainy days in that month. The Mauritius statistics as collated by him for the period 1892-1905 are given below, as they serve to demonstrate the combined effect of rain and temperature on the crop harvested.

INFLUENCE OF CLIMATE ON MAURITIUS CANE CROP (WALTER).

Year.	Rainfall, Oct.-May. inches.	Degree of wetness.	Number of rainy days.	Temperature F°	Metric tons of cane per arpent (1·043 acre).
1892	43·97	27·45	133	76·8	14·85
1893	45·21	32·13	163	75·5	25·28
1894	38·76	22·31	137	74·7	16·27
1895	44·00	31·53	132	76·0	22·15
1896	69·78	41·26	126	75·6	21·32
1897	15·46	7·62	94	75·9	6·63
1898	37·67	24·33	146	76·5	25·03
1899	35·43	22·53	119	76·2	20·99
1900	27·54	16·40	127	76·7	22·21
1901	40·05	20·49	122	76·0	16·38
1902	41·18	26·87	137	75·4	17·99
1903	43·89	29·25	137	76·6	26·19
1904	34·26	23·01	148	74·8	14·34
1905	51·60	42·63	150	75·7	23·99

The question is, however, more complicated than this, and is controlled by other factors, which are also discussed by Walter. The effect of rain or drought in one year may continue into the next, and there is also a tendency for small crops to follow heavy ones. This is not so much a question of temporary soil exhaustion as that a large crop means a long period for harvest, with a reduction in the time available for the next growing season, when the crop consists mainly of ratoons.

Other observations on record are those of Rawson[1] in Barbados, who, from a study of rainfall statistics, showed that it was possible to foretell the return of sugar per acre within an error of 6·6 per cent., when the rainfall for the preceding twelve months was known. Similarly, Maxwell Hall in Jamaica observed relative productions per acre of 14·41 and 15·59 as corresponding to rainfalls of 56 and 76 inches respectively.

It would not be unreasonable to suppose that those areas lying in a zone of nearly constant rainfall would afford a cane of low sugar content. Such, however, is not the case. The average precipitation on seven plantations in the Hilo rain zone is 173 inches; that on six plantations adjacent to, but outside the zone, is 84 inches. Averaged over ten years the sugar content of the cane grown on plantations in this rain zone was 13·05 per cent., that of the plantations in the comparatively dry area being 13·22 per cent. The soil conditions and varieties of cane grown were nearly identical, and at the same time the drainage was very rapid.

On the other hand, the effect of heavy rains during the crop season is seen in a diluted juice for several days after the fall. If there is no decrease in the purity, no loss of sugar but only a dilution is indicated; a new growth starting will cause the consumption of sugar in metabolic processes.

Connected with the question of heavy rainfall is the possibility of larger quantities of combined nitrogen being afforded to the crop. The most detailed statistics on this matter are those of Lawes and Gilbert made at Rothamsted in England, where they found on an average 4·92 lbs. of combined nitrogen in the yearly precipitation. Elsewhere most varied results have been found. The greatest quantity of nitrogen as ammonia recorded in a year has been found in Venezuela[16] and in Tonkin[17], where 14·05 and 13·60 lbs. nitrogen respectively have been observed. The greatest quantity of nitric nitrogen recorded was also in Tonkin and equalled 14·70 lbs. nitrogen per acre; the next highest figure is from Réunion[16] and only amounts to 6·24 lbs. per acre. In great contrast to these figures are the minima recorded from East Java[16] and amounting to only 1·13 lbs. of ammoniacal and 0·75 lb. of nitric nitrogen. In one and the same place also there are large yearly variations. Thus, in Tonkin during the years 1902-08 the ammoniacal nitrogen varied from 3·25 to 14·70 lbs., and the nitric nitrogen from 3·95 to 13·60 lbs. It follows, then, that no definite figure can be given, as the quantity received may vary from 2 to nearly 30 lbs., the probable amount being in the neighbourhood of 10 lbs. Whereas the ammoniacal nitrogen is derived from the degradation of organic matter, notably that contained in the sea, that which occurs as nitric may be largely the result of atmospheric electrical discharges; this connection, after having once been accepted and then discounted, has received support by Capus[17] following on a study of results obtained by Aubray[18] in Tonkin.

The main effect of drought on the cane crop is, of course, reduction in tonnage; what crop is harvested will contain a high percentage of fibre due to the restricted length of the internodes, and to the evaporation of water from the cane by increased transpiration.

The humidity of the atmosphere is another factor that bears on crop production, and as it grows less the greater becomes the quantity of water that is transpired from the leaves, and the greater becomes the demand on the soil supply. Early writers observing that the bulk of the cane cultivation was near the coast attributed a specific effect on the cane to the saline breezes and maritime climate.

Thus Wray[19] writes :—

> "The climate most congenial to the cane is of a warm and moist character, with moderate intervals of hot, dry weather, attempered by the refreshing sea breezes. It has been found to grow most luxuriantly on islands and along the sea coasts of the mainland, which leads us to conclude that the saline particles borne on the sea breeze exercise a powerful effect on the growth of the cane."

Delteil[14] expresses himself in terms similar to those used by Wray :—

> "The sugar cane originating from India and Eastern Asia demands a warm, moderately moist climate, with intervals of dry heat; it loves sea breezes because of the particles of salt which are carried to the fields and increase their fertility."

According to Bonâme :—[15]

> "A warm and moist climate is most favourable to the growth of the cane, and it is on islands and the sea coast that the most luxuriant plantations are to be seen, for it is here that are found together the conditions of heat and moisture demanded for its greatest development."

Stubbs, in commenting on this idea, is most certainly right in attributing the maritime position of many sugar plantations to economic reasons. An inland sugar estate in most tropical countries would be deprived of means of access to the world's markets. Where a local market exists, the cane is grown successfully in districts remote from the sea, as in Queensland, Argentina, Brazil and India. Some insular districts, such as the arid parts of the Hawaiian Islands, have a climate of low humidity, and the same is also the case in the dry parts of Peru, both of these places producing, under irrigation, the largest crops on record.

A factor that has influence on the composition of the cane is that of direct sunshine as bearing on the process of change known as photosynthesis. The experiments of Went in Java are referred to in Chapter I, and the factor may reasonably be of some moment in the wetter districts, and may account in part for the low percentage of sugar in canes grown in the equatorial rainbelt.

The remaining climatic factor to be considered is that of the winds, the chief effect of which is concerned with the removal of soil water. The more frequently the stratum of air over the soil is removed the greater is the evaporation. The point of the compass from which the wind blows is also of consequence. When the wind blows from the sea to the land air heavily laden with moisture is conveyed thereto, whereby the soil evaporation is lessened. It is probably for this reason that the surface evaporation from shallow exposed vessels is smaller in Demerara than would be expected from temperature conditions alone. Here it reaches 35·21 inches per annum, compared with 31·04 at Oxford and 88·28 at Bombay.[22] In Demerara the prevailing winds are the north-east trades blowing from the Atlantic Ocean, with no mountains to intervene and cause a deposit of the air-borne water as rain. Maxwell[23] in Hawaii found that 120 sq. ins. of exposed area evaporated in 270 days 33,480 grams of water, the relative humidity being 79·5, and the average temperature 79·5° F. Under equal conditions, but with the water protected from the wind, the evaporation was equal to 12·1 inches per annum. To a certain extent the evil effects of winds may be mitigated by the judicious planting of windbreaks.

Crop and Planting Time.—The combined influence of rainfall and temperature determines the harvest and planting seasons. The harvest takes place in the dry season, and mainly after the cane has reached maturity. In those localities that have a cool season, the harvest time is coincident therewith, and its duration is limited by the commencement of the rains, which not only mark the beginning of the period of vegetative activity, but also render haulage operations impossible. Conversely, the rainy season is selected for planting, and the amount of rain falling in a period also determines the possibility or not of ploughing operations. The harvest time of the principal cane-growing districts is as follows:—

Cuba and the West Indies—December or January to June.
Java—May to November.
Mauritius and Réunion—August to December.
Louisiana—October to January.
Hawaiian Islands—December to September.
Peru—October to February.
Brazil—October to February.
Argentina—June to October.
Egypt—December to March.
Queensland—June to November.
Mexico—December to May.
Philippines—December to March.
British India—January to April.
Spain—March to May.
Formosa—January to May.
Fiji—June to November.
Madeira—February to May.
Natal and Portuguese East Africa—May to November.
British Guiana has two and sometimes three crop seasons; the main harvest is from September to December, with a short season in May and June and an occasional one in March.

The harvest season generally extends over a period of four to six months and exceptionally in the arid localities may be continued over the whole year with such stops only as are required for overhaul and repairs. At the beginning of the crop an unripe cane of lower sugar content is harvested; the percentage of sugar gradually increases and is usually at a maximum in the third and fourth months of harvest, after which it decreases as the cane becomes over-ripe. Taking Cuba as an example, in December the cane will contain from 10 per cent. to 11 per cent. of sugar, the maximum of 14-15 per cent. being obtained in March and April, after which a fall occurs, which is very rapid if the crop is prolonged after the seasonal mid-year rains fall. It is easy to see that the combined questions of factory capacity, capital cost, duration of harvest, and yield per cent. on cane form a most important economic problem, which is usually further complicated by a deficiency in the labour supply.

The ideal distribution of rainfall and temperature for an annual cane crop in the northern hemisphere would be somewhat as follows. During the crop period, for example from December to April, a cold dry season should prevail with showers of sufficient frequency to maintain the vitality of the cane without interfering with the harvest operations. During the next six months, or from May to October, there should be a high temperature combined with a heavy and well distributed precipitation. The rains should fall at the rate of about two to three inches per week with absence of excessive falls or of prolonged periods of drought. For one month prior to harvest the rainfall and temperature should both decrease in order to stop the vegetative growth and allow the cane to ripen, but complete absence of water is not desirable. Finally, it may be mentioned that early rains after harvest give a cane that itself ripens early.

Variety and Climate.—Most varieties of cane attain their maximum growth in the more essentially tropical districts. Some varieties, on the other hand, fail entirely when removed from these latter districts, and others, such as those peculiar to northern India, do not succeed in the tropics.

It seems probable that adaptability to a colder climate is a characteristic of the red and purple canes. In a subsequent chapter it will be shown that the light and dark Cheribon (Transparent, Bamboo, &c.) canes in all probability originated from striped canes. Stubbs[24] states that in the relatively cold climate of Louisiana a plantation of striped canes if not renewed tends to pass into one of all purple canes, and he classes this phenomenon as a case of the "survival of the fittest," attributing to the purple colour a greater capacity to absorb heat.

The cane known as Cavengerie, Port Mackay (in Mauritius), Louzier (in Argentina), Po-a-ole (in the West Indies), is also another instance of a dark-coloured cane being adapted to a cold climate. In the less tropical portions of South America this variety is one of the canes most widely grown.

In the Hawaiian Islands, the Lahaina cane forms the bulk of the crop on the irrigated plantations in the arid districts, chiefly at a low altitude; it is replaced by the Yellow Caledonia on the rainfall plantations situated mainly at a higher level, and hence with a colder climate. A peculiar case of suitability to climate is to be found in the D 74 cane, which has conferred so great a benefit on the Louisiana industry; suitability to the climate of Louisiana is in this case due to the early maturity habit of the variety. The adaptability of a variety to a cold climate does not always imply that it will fail in a hotter one, as the purple cane of Louisiana formed for many years, under the name of Cheribon, the standard cane of tropical Java.

A further instance of the connection between variety and climate is to be found in the success of the Uba cane in extra-tropical Natal and Madeira, localities unsuitable for the growth of the canes of the Otaheite type ; in fact it may be said that every locality is suited for the growth of one or another variety to its best advantage.

REFERENCES IN CHAPTER III

1. Report on the Rainfall of Barbados, and its influence on the Sugar Crops, 1847–1871.
2. The Sugar Industry of Mauritius.
3. Reports of the Juries, Exhibition of 1851, p.63.
4. Handbuch der Climatologie.
5. The World's Cane Sugar Industry.
6. *Loc. cit.*, 5 *sup.*
7. *Loc. cit.*, 5 *sup.*
8. U.S. Dept. of Agric., Records of the Weather Bureau.
9. *Loc. cit.*, 2 *sup.*
10. *Loc. cit.*, 5 *sup.*
11. Stubbs' "Sugar Cane."
12. H.S.P.A. Ex. Sta., Agric. Ser., Bull. 17.
13. *Loc. cit.*, 2 *sup.*
14. *Scientific American* Supplement, 1894, 36, 14,625.
15. *Loc. cit.*, 2 *sup.*
16. *Jour. Agric. Soc.*, 1905, 1, 28.
17. *Annales de Geographie*, 1914, 14, 109.
18. *Bulletin Economique de l'Indo-Chine*, 1909, 12, 31.
19. The Practical Sugar Planter.
20. La Canne à Sucre.
21. Culture de la Canne à Sucre à Guadeloupe.
22. Soils, New York, 1906.
23. U.S. Dept. of Agric., Bull. 90.
24. Stubbs' "Sugar Cane."

CHAPTER IV

VARIATION IN THE CANE AND CANE VARIETIES

IN the various systems of classification, plants are divided and subdivided into related groups.

There hence appear such terms as *Family*, which includes a number of *Orders*, comprising in their turn *Genera*, which are again divided into *Species*. In more detail still a species can be divided into a great number of *Varieties*, each of which can be distinguished and recognised by certain minor characteristics, which are not of sufficient importance to raise the variety to the dignity of a species. Within a variety may be found a *Strain*, a term which is often used to apply to characters fixed by artificial selection. A typical example of a strain is to be found in the beetroot, in which by continually selecting plants rich in sugar as mother beets several very sweet strains have been acquired.

Following Hackel[1] the genus *Saccharum* is divided into four sub-genera: *Eusaccharum*, *Sclerostycha*, *Eriochrysis*, and *Leptosaccharum*. These four genera include in all twelve species which are in their turn subdivided into a number of varieties. The cultivated sugar cane is termed *Saccharum officinarum*, and is divided by Hackel into three groups.

(*a*) *Genuinum*. Stem pale green to yellow, darker yellow near the ground. Leaf grass-green, underside sea-green.

This group is again divided into (1) *Commune*, (2) *Brevipedicellatum*.

(*b*) *Violaceum*. Stem, leaf sheath, lower side of leaves, panicle, violet.

(*c*) *Litteratum*. Stem dirty green or yellow, marked with dark red stripes at equal intervals.

The inclusion of *Litteratum* as a sub-group is to be deprecated. The term was first used by Hasskarl[2] with reference to a striped cane in Java. There are, however, many striped varieties with many combinations of colour. As shown later, these striped canes are to be regarded as chimeras, and arise from self-coloured canes, and in turn themselves afford self-coloured canes as sports or bud mutations.

From the seventeenth century onwards the sugar cane has been frequently described by botanists, and very considerable confusion has arisen. Generally in the older literature three varieties of the sugar cane are referred to:—*S. officinarum*, *S. violaceum* and *S. sinense*. As used by Tussac,[3] *S. violaceum* refers to a cane with a violet stem, the purple Batavian cane, and in this sense it is also used by Humboldt[4] and some other early writers. The term should, however, be confined to a sub-group characterized by the possession of violet leaves. This property is not uncommon, and may be found in a certain degree in the Badilla cane at present cultivated to some extent in Fiji and Australia. It also occurs amongst some canes indigenous to the Hawaiian Islands and still growing there in isolated districts. The cultivation of this variety is now confined to specimens preserved in botanic gardens. The variety *S. sinense* is due to Roxburgh,[5] who, however, did not regard it as a variety, but as a distinct species. He based the distinction as lying in the decompound and super-decompound branches of the panicle, as opposed to the simple and compound branches of *S. officinarum.* A second difference on which he did not lay so much stress is the possession of a small inner scale or valve in the corol. This variety or species was sent from China to Calcutta by Mr. A. Duncan in 1796, and was once grown to some extent in India. It is now apparently lost or merged in other varieties.

Roxburgh's original drawing of *S. sinense,* or a very early copy thereof, is to be seen in the Kew Herbarium.

The term "Chinese cane" has been applied to this variety, and also to the Sorghum, another sugar-producing grass.

In this chapter *variety* is used in the sense of members of the same species, such members being capable of recognition by certain characteristics, which are maintained indefinitely when the variety is propagated asexually.

A variety of any plant, when once established, may be propagated sexually through seed, or asexually through cuttings. When propagated sexually, the seedlings may come true to seed, as is generally the case with many grasses such as wheat, barley, oats and rice. With the cane, however, every seedling is distinguishable from any other and thus forms a new variety. If, however, a variety of the sugar cane is propagated asexually by cuttings, the descendants show very little tendency towards variation. In fact the term *descendant* is barely proper since the life of the plant is continuous, and the millions of stalks that may arise in a few years from a single original cutting may be regarded as obtained by a process of layering.

Sexual Variation in the Cane.—The earliest reference to the flowering of the cane is to be found in Rumph,[6] who writes "Flores semenque nunquam prosert, nisi per aliquot annos stetent in loco saxoso, tumque panicula ingens arundinacea suprius excressit." This statement, however, seems to refer to the tasseling or arrowing of the cane, and not to the fertility of the seed, as is generally stated. Similarly, it has been stated that Bruce,[7] the African explorer, saw seedlings in *Abyssinia,* but his statement reads: "I apprehend that they [i.e., the sugar cane] were originally a plant of the old continent and transplanted to the new upon its first discovery, because here in Egypt they grow from seed." The context shows that this statement was made with reference to Latitude 29°, and he does not state that he had actually seen seedlings, but apparently reports from hearsay.

Not many years later, Cossigny[8] had stated that the cane bore fertile seed, and had recommended to the French Government that experiments be made in Mauritius with the object of obtaining new varieties by seminal variation.

The earliest analysis of the cane flower is perhaps that due to Peterkin[9] (1789), which is, however, very imperfect. He assumed the fertility of the cane without giving any evidence therefor. Later descriptions were given by Dutrône[10] (1790), Tussac[3] (1808), Bonpland[11] (1815), Macfayden[12] (1832) and Schacht[13] (1859), whose description is the most detailed. No one of these writers saw or obtained seedlings, and Tussac, who repeatedly tried to obtain them, surmises that the cane had lost its fertility by having been propagated for many generations asexually. The fertility of the cane was

PLATE III.

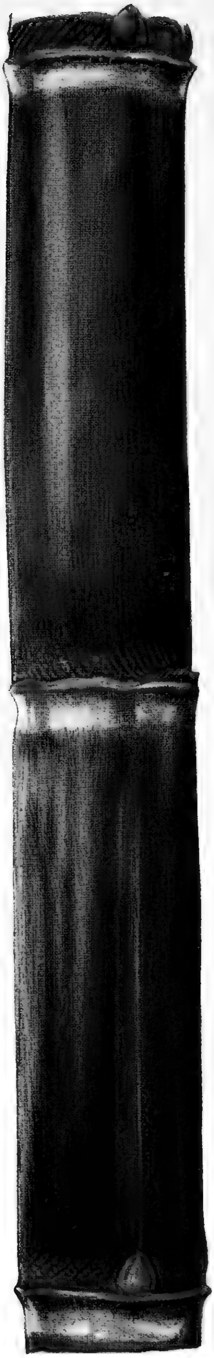

$\frac{1}{2}$ SIZE

PURPLE BAMBOO.

definitely established in May of 1858,* when an overseer at the Highlands Plantation in Barbados saw and recognised seedling canes growing in the field. He reported their presence to Mr. J. W. Parris, the proprietor, who grew these self-sown seedlings to maturity, and afterwards grew four and a half acres of seedling canes. This discovery was put on record in the Barbados *Liberal* of February 12th, 1859, and was confirmed shortly afterwards by several local planters. The question was followed up by Drumm[14] in Barbados, who experimented in hybridization, and devised the method of "bagging" the inflorescence referred to later. It does not appear certain that Drumm ever obtained hybrids, though his communications on the matter in the local Barbados press obtained wide publicity in the *Sugar Cane*, the *Produce Markets Review*, and in Australia.

In 1862 self-sown seedlings were also observed in Java[15]; in 1871 these were obtained of intent by Le Merle[16] in Réunion, and about the same time the Baron da Villa Franca wrote as if the fertility of the cane was a matter of common knowledge in Brazil. All these observations, however, were forgotten, and systematic research work dates from the re-discovery by Soltwedel in Java in 1888 and by Harrison and Bovell in Barbados in 1889.

Long previous to this, however, it is possible that seedling selection had been practised by primitive peoples, and it is almost certain that it was as seedlings that some of the cultivated varieties of cane were originally segregated by some intelligent and observant savage. Mr. Muir has told the writer that he saw, during his travels in search of a parasite for the Hawaiian beetle borer, such a process obtaining amongst the New Guinea natives. A seedling cane, or any newly introduced sexual variant, is then in no wise different from any of the older varieties, the sexual origin of which has been forgotten.

In Java at first the fertility of the cane was regarded as of academic interest only, since it was believed that the Black Cheribon cane had reached commercial perfection. The development of the Sereh disease in the 'nineties was the stimulant to the use of this method of research in order to obtain improved varieties. In the British West Indies research was begun at once, and was mainly undertaken by Harrison, by Bovell, and by Jenman. Peromat in Mauritius was also an early worker. A number of years elapsed before Eckart started his experiments in Hawaii, as here also at first a stimulus was wanting. Other workers in this field have been the Littée brothers in Martinique, the Hambledon Mill in Australia, the Diamond Plantation in Demerara, and more recently the Louisiana State Experiment Station at Audubon Park, and the Experiment Station at Tucumán, Argentina. A large number of seedlings has also been grown at the Soledad Estate of Mr. E. F. Atkins in Cuba by Mr. R. M. Grey, but the results have not been made public. The last cane-growing district to fall into line is also the doyen of all, namely, India, and here Barber and Venkataraman[17] have initiated a series of studies equally valuable from the academic and the utilitarian aspect.

Methods of obtaining Seedlings.—The methods under which seedlings are obtained are:—

---

*A statement in the "Transactions of the Agricultural and Horticultural Society of India" (1838, 2, 393, reads as if cane seedlings had even then been experimentally propagated in that country In Ure's "Dictionary of Arts and Manufactures," of date *c.* 1845, the statement is also made that "in India it grows to seed." I have been unable to confirm or refute these statements.

(*a*) *Self-fertilization.*—This only occurs when the variety in question produces fertile pollen, and is only certain when but one variety is under cultivation, or when the flowering season of different varieties is separated, or when the flower is protected from wind-borne pollen by devices such as muslin bags.

(*b*) *Cross-fertilization or Hybridization.*—Several methods are employed. Drumm in 1869, in Barbados, put the flowers of different varieties together in muslin bags and then sowed the arrows separately. The female parent of any resulting seedling is then known, but the male parent may be either of the two varieties bagged.

To avoid the inconvenience of bagging the inflorescence, canes of different varieties are planted in alternate rows, or in chess-board fashion, when again an uncontrolled cross-fertilization may arise. In this method the number of possible male parents is the number of varieties which possess fertile pollen.

The observation that some varieties do not produce fertile pollen led Kobus to initiate the use of such varieties as the female parent ; and when Drumm's technique is followed, or when only two varieties are grown or are in flower simultaneously, hybrids of ascertained parentage result. Sterility of the pollen is, however, only relative, and in this procedure some element of doubt remains.

The only sure method of obtaining seedlings of controlled parentage is the emasculation of the flowers of one variety before the pollen is ripe, followed by subsequent impregnation with the pollen of a second.

This was first done in 1904 by Lewton-Brain[18] in Barbados, and by Mitchell[19] in Queensland. In performing this operation an immature inflorescence of the variety destined to become the female parent is selected, and during a working day the stamens are dissected out from as many single flowers as is possible. The rest of the inflorescence is then removed and the emasculated flowers protected from adventitious pollination by enclosure in a fine muslin bag. After the stigmatic plumes have become ripe, pollen from the variety selected to be the male parent is dusted on with a fine camel's hair brush.

The skill required, the uncertainty of the results, and the small number of seedlings obtained, have prevented the extended use of this method as a means of obtaining new varieties, though it is being followed up now in Java and in the British West Indies in a study of the application of Mendelian principles to cane breeding.

In obtaining seedlings from naturally fertilized seed, it is customary to collect the inflorescences when the spikelets begin to fall naturally. The tassels are then hung up to dry, and after a few days the spikelets fall off, or can be easily detached. After one or two more days' drying they are ready for sowing. The seeds are sown in boxes. In Hawaii it is customary to use a rich vegetable mould collected from the neighbouring forest ; this is sterilized by boiling to kill seeds of other grasses. In India fine horse-dung is well watered and any seeds present allowed to germinate. It is then stored and when required for use mixed with equal parts of fine river sand. The seeds generally germinate in less than a week, and when about two months old are ready to be transplanted to flower pots or wicker baskets, and eventually are planted out in the field, after which the process of selection begins.

Inheritance in Seedlings.—In attempting to discuss inheritance in cane breeding, it must not be forgotten that the older varieties of canes whence the seedlings themselves are descended are also seedlings and the descendants of seedlings. Accordingly, the study of inheritance from a variety should not begin until the type has become fixed by repeated selection of generations of self-fertilized seedlings. Another difficulty arises, since it is by no means sure that what is considered a variety is by any means a pure strain. Self-fertilized seedlings have a great tendency to resemble the parent, and, as pointed out by Harrison,[20] a plantation originally Bourbon (to mention one example), in the course of time may become, if long periods of ratoonage are allowed, a mixture of Bourbon and Bourbon-descended seedlings.

Apart from these considerations there appears to be much difference of opinion. In the first edition of this book the statement was made: "The factors governing the properties of seedling canes have been studied in great detail by Harrison and Jenman[21] and by Went and Prinsen Geerligs.[22] Briefly it appears from their work that the cane is enormously subject to variation, and that there is but little tendency towards the inheritance of the properties of either parent." This statement does not now appear to be true, looked at in the light of later more detailed study, as is evident from the abstract of Harrison's work given further on. Any confusion which may arise would seem to be due to the differences in results as obtained from hybridized and inbred seedlings.

In Java more definite statements on inheritance have been made, and the standpoint there appears to be as follows:—

> "Pure-bred seedlings always inherit the character of the parent cane to a marked degree. That is to say, the seedlings whose parents are both of one and the same variety will possess the characters of that variety, and if pure breeding is carried on for several or more generations there will be no marked deviation from the characters of the original variety. Pure breeding, therefore, should serve to perpetuate any desired strain.
>
> "The seedlings resulting from a crossing of two varieties of cane may show great variations among themselves, but each of them will show either a combination of the characters of the parent canes or characters intermediately between those of the parent canes, and none of them will show characters foreign to both parents. If, for example, Cheribon and Chunnee are crossed, a great variety of canes may be obtained; but they will all range between the two parents, none will have leaves broader than those of Cheribon or narrower than those of Chunnee, and likewise none will have sticks thicker than those of Cheribon or thinner than those of Chunnee.
>
> "If a hybrid variety is close-bred the resulting canes will all possess the mixed characters of the hybrid parent and there will be no reversions to the unmixed type of either grandparent. A hybrid variety from its very inception, therefore, is considered a fixed strain, which, if bred close, will always come true from seed."

THE WORK OF HARRISON AND HIS COLLEAGUES.

At the West Indian Agricultural Conference, 1912, Harrison, Stockdale and Ward presented a paper—"Sugar Cane Experiments in British Guiana"—which contained an account of the development of the methods used and results obtained by Harrison and his co-workers. The following pages are based on this report.

1. Early in his studies Harrison found that certain canes of little value as sugar producers—the Kara-Kar-awa, the Brekeret—were prolific parents under such conditions as rendered cross-fertilization very improbable, a view afterwards definitely established for the first-named variety. The majority of seedlings obtained (two thirds at least) resembled the parent,

but others presented wide variation. This observation led Harrison to the conclusion that cross-fertilization was unnecessary for the object of the work, and therefore this method has been little used by him.

2. It was soon found that, although the Kara-Kar-awa and Brekeret were prolific parents, there was little probability that any of their progeny would become valuable as sugar producers. This observation was also found to be true of seedlings of these varieties, so that eventually Harrison reduced his parents mainly to D 625, Bourbon, White Transparent, and Red Ribbon.

3. Of these four varieties it is observed :—

> "The following generalizations can be made of certain of the economic characteristics of the progeny of the parent varieties :—
>
> *D 625.*—Vigorous seedlings, juice generally richer than that of the parent, flower and seed sparsely ; ratoon well and resist drought.
>
> *Bourbon.*—Proportion of selected seedlings low ; the seedlings suffer very badly in drought ; liable to fungoid disease ; ratoon only moderately ; some flower and seed freely, others sparsely.
>
> *White Transparent.*—Seedlings generally rich in juice ; grow well as plants, but are poor as ratoons and rapidly deteriorate ; flower and seed very freely.
>
> *Red Ribbon.*—Juice generally rich ; flower sparsely as a rule ; good drought-resisters.
>
> These generalizations are based upon our lengthy experience with large numbers of seedling varieties. Our accumulated evidence as to the several economic characters of the different seedling varieties remains to be analysed."

5. The method of selection of the seedlings is as follows :—

> "*First selection* of parent varieties for seed producers ;
>
> *Second selection* of the more vigorous of the seedlings obtained from them for field propagation ;
>
> *Third selection* of the varieties growing under field conditions by the cultural characteristics ;
>
> *Fourth selection* from these selected sorts by their analytical characters ;
>
> *Fifth selection.* The third and fourth methods are repeated with plants raised from the tops of the varieties selected under the fourth selection, and this is done repeatedly during the cultivation of them from plants to second and third ratoons. As the method of cultivation in British Guiana renders it necessary for canes to have good ratooning powers to be of service as sugar producers, we lay more stress on the selection from ratoons than from plants ;
>
> *Sixth selection.* The varieties which have been selected are next grown on plots of about 1/20 acre, side by side and under identical conditions of cultivation and manuring. Their peculiarities are carefully watched, and out of batches of forty or so selected for this trial, probably not more than a dozen will be retained in cultivation as third or fourth ratoons ;
>
> *Seventh selection.* During the course of the fifth and sixth selections several of the varieties finally retained in cultivation will have been selected by planters for large-scale cultivation. These and others selected by ourselves are next examined by means of manurial experiments. Plots of about 1/2 acre are divided into smaller plots, and upon these the varieties are raised under different systems of manuring. Some of the plots of every kind are manured with phosphates, and perhaps potash, others are not. Some of each are grown without nitrogenous manure, others with increasing quantities of nitrogen applied in the manure. It has been found that the mean results of a kind under the different manurings apparently offer the most reliable figures as to comparative value we can obtain in small scale experiments."

The canes obtained by Harrison and his colleagues that are or have been prominent are described below.

D 74.—A descendant of White Transparent. *Stalk*—Pale green, erect, stout, medium length of joint. *Leaf*—Broad, light green. Arrows profusely, matures early.

PLATE IV.

$\frac{2}{3}$ SIZE.

STRIPED BAMBOO.

D 95.—A descendant of White Transparent. *Stalk*—Dark purple, erect, average girth and length of joints. *Eyes*—Prominent and inclined to sprout. *Leaf*—Light green, narrow, erect. Arrows profusely, matures early.

The above two canes are historical, as they were the first two sent out by Harrison. In Demerara they have not become established, but in Louisiana they have proved of exceptional value owing to their habit of early maturity. D 74 is also grown to some extent in Mauritius.

D 78.—*Stalk*—Greenish-red, erect. *Leaf*—Dark green. Arrows sparsely. This cane, after a few years of promise, developed the habit of producing only tops and leaves, with but little stalk, and forms an example of the degeneracy associated with the newer varieties.

D 109.—A descendant of White Transparent. *Stalk*—Dark purple, erect. *Leaf*—Dark green, narrow. This cane, like D 78, is also markedly atavistic, but it continues in cultivation to some extent in " pegassy " soils, i.e., soils with much vegetable detritus.

D 117.—A descendant of White Transparent. *Stalk*—Yellow, erect. *Leaf*—Narrow, light green. Arrows profusely. This cane does not appear ever to have been selected for plantation work in Demerara. It has found its way to Hawaii, where it has been received with some favour, particularly at higher elevations.

D 145.—A descendant of Red Ribbon. *Stalk*—Greenish purple, erect, stout, very brittle. *Eyes*—Prominent. Arrows sparsely. This cane continues in cultivation in Demerara on moderately heavy but friable soil.

D 625.—A descendant of Dyer, a seedling of Meligeli. This cane has been the most extensively grown of all that Harrison has raised, and occupies the largest individual area in Demerara. It is best suited for heavy and moderately heavy lands, as on the friable soils its vegetative vigour unduly prolongs its period of maturity. It is, however, of lower sugar content. Cowgill[23] thus describes this cane :—

> " *D* 625.—Habit, erect. Length, medium to long. Diameter, large. Shape of stalk, usually straight. Colour, light yellowish-green to yellow ; reddish-brown rings at the upper limit of the nodes, especially on the upper portion of the stalk, the portion of the node below the leaf-scar glaucous. Internodes, medium to long, nearly round in cross-section ; the sides typically nearly straight, but sometimes slightly constructed and sometimes a little tumid on the side opposite the bud, sometimes a little staggered ; furrow, broad but shallow. Nodes, medium to large ; the portion above the leaf-scar long, and usually as large, or larger, in diameter than the internode above ; rudimentary roots rather far apart, in two or three rows ; the depressed ring forming the portion below very shallow. Buds, large and quite uniform in shape ; typically plump and broadly triangular to ovate in outline ; margin, medium to narrow and conforming to the shape of the bud, often bearded at the apex and barbellate on the sides of the margin. Foliage, medium to scant ; colour, medium green. Leaf, medium width, medium length, sub-erect, tapering into a fine point medium abruptly. Leaf-sheath, nearly round at the throat ; auricles small ; ligula medium length, with the upper edge usually rounded, but sometimes slightly pointed, and sometimes slightly depressed in the centre. Vestiture of leaf sheath, many soft setæ. Vestiture of throat of sheath, medium fine hairs on the auricles and adjacent edges of the leaf, and sometimes behind the ligula ; sometimes finely pubescent on the face of the base of the leaf. Most important distinguishing characteristics, form and size of the internodes and buds, and the brown ring on the node."

D 1135.—*Stalk*—Erect, red to purple, small girth. *Leaf*—Light green. *Eyes*—Prominent. Very large number of canes in a stool. There appears to be some doubt about the origin of this cane, and perhaps the number has been changed. It is very extensively grown in Australia and also on the estate scale in Hawaii, particularly in the colder and wetter districts. While it is an exceptionally heavy cropper, its juice is of less than average value.

WORK OF BOVELL AND HIS COLLEAGUES IN BARBADOS.

Simultaneously with the experiments of Harrison in British Guiana, the Imperial Department of Agriculture for the West Indies under the superintendence of Bovell was engaged in raising seedlings in Barbados. At least two canes of value have resulted :—

B 147.—*Stalk*—Yellow, recumbent, average girth and very long-jointed, with a well marked channel. Arrows sparsely.

B 208.—This cane is thus described by Cowgill :—

> " Habit, inclining to reclining. Length, medium to short. Diameter, medium to large. Shape of the stalk, usually curved. Colour, medium green, more or less glaucous. Internodes, nearly round in cross-section, typically short and tumid, and with a prominent shoulder on the side opposite the one on which the bud occurs ; furrow, very shallow. Nodes small ; the portion above the leaf-scar a little longer, and larger in circumference than that below ; the depressed ring forming the portion below the leaf-scar, medium depth but narrow, deepest below the bud. Two or three rows of rudimentary roots. Buds typically having started through the scales and projecting out from the stalk in a globoid to conical point ; before starting short and swollen ; when very young typically flat, very broad and ovate-cuspidate in outline, with the margin extending across the top rather than on the sides ; lobes typically well-marked. Foliage, medium in amount, rather dark in colour. Leaf, medium to short, broad, growing semi-erect, tapering medium abruptly into a point. Leaf-sheath broad, almost round at the throat, light green to reddish green in colour ; auricles medium to small ; ligula, medium length, with the upper edge slightly depressed in the centre. Vestiture of leaf-sheath, many long, medium stiff setæ, not closely appressed. Vestiture of throat of sheath medium, soft hairs on the auricles and edges of the base of the leaf, and more or less on the adjacent area of the face of the leaf. Most important distinguishing characteristics, form of the internodes and buds."

This cane is very susceptible to environment, and is also subject to variation.* It is suited only for lighter, friable soils, is drought-resistant, but fails on heavy clays. It is grown extensively in the British West Indies and British Guiana. It fails entirely in Hawaii.

Work in Barbados continues, and, as in Java, new canes are continually being produced. The later varieties are referred to as BH, BNH, and BSF, denoting Barbados artificial hybrid, Barbados natural hybrid and Barbados self-fertilized seedling. The year in which obtained is placed in brackets, followed by the identifying numeral, e.g., BH ('07) 4.

WORK OF ECKART IN HAWAII.

It was not till nearly twenty years after the inception of work in the West Indies and in Java that the necessity of similar work was felt in Hawaii. The method pursued by Eckart has been essentially that developed by Harrison.

Adventitious fertilization has been used, and the seedlings obtained are known only as regards the female parent, though probably most were self-

---

*A fine series of coloured drawings prepared under the direction of Harrison, and showing the extreme variation exhibited by this cane, is to be found in the Kew Herbarium.

fertilized. The most prolific parents have been Lahaina, White Mexican, D 116, D 117, D 1135, and a variety called locally Yellow Bamboo. No inheritance of the colour of the parent was noted by Eckart. So far only two canes of Eckart's breeding have become prominent—H 109, a descendant of Lahaina, and H 146. The former is a yellow upright cane of the Otaheite type, of early maturity and high sugar content.

SEEDLING CANES IN JAVA.

Very soon after the recognition of the fertility of the cane, and stimulated by the appearance of the sereh disease in Java, extensive breeding experiments were made in Java. The earlier work, dating from the early 'nineties, seems to have been mainly carried out by Kobus and Wakker at the Oost Java Proefstation, and by Bouricius and Moquette at the Kelegan estate. After an hiatus new work appears to have been undertaken by individuals and interested firms. The Java seedlings appear classified under the letters P.O.J. (Proefstation, Oost Java), B (Bouricius), E.K. (E. Karthaus), S.W. (Sempal Wadak), D.I. (Demak Idjo), and Fabri, the name of a mill.

The earlier breeding work at the Oost Java Station was conducted with the Indian cane Chunnee (one of the Ukh class) as male parent, and with the Black Cheribon and Striped Preanger as female parent. This selection was made with the object of establishing as a hybrid a cane with the sereh-resistant qualities of Chunnee and desirable cultural properties of the female parent. The many canes thus produced mainly show the following features: 1. Narrow leaves; 2. Long, thin joints; 3. Hard rind; 4. A modified central fistula; 5. Sereh resistance. These characters are to be attributed to inheritance from the male parent.

Bouricius made his crossings mainly with the Red Fiji or Canne Morte as father, and the Cheribon cane as mother. The E.K. series results from crossing with the Black Borneo or Bandjermassim Hitam as mother and Red Fiji as father. The S.W. series results from the Batjan cane as father and the Cheribon cane as mother.

Of all the numerous canes bred in Java, two stand out pre-eminent. P.O.J. 100 and B 247, and for a number of years about 90% of the Java crop has come from these canes. Of the other earlier seedlings P.O.J. 33, P.O.J. 36, P.O.J. 213, P.O.J. 228, 36 M(*oquette*) and 66 B have been grown. Of the later ones E.K. 2 seems to be under most extensive cultivation. The Black Cheribon in 1917 was reported as covering 8 per cent. of the acreage in Java, and in that year as many as 56 varieties, mostly in very small quantities, were reported as being under cultivation. A number of Java seedlings, especially the earlier ones of Chunnee blood, have travelled to other districts, and in doing so have repeated the earlier confusions of misplaced labels, etc.; and to this confusion the writer has contributed by misdescribing P.O.J. 36 in the earlier issue of this book, whereby it became confounded with P.O.J. 234. In addition, in Porto Rico, P.O.J. 36 has mutated itself to P.O.J. 56, and in Argentina P.O.J. 228 in parts has become known as P.O.J. 139.

Short descriptions of these canes based on those of Jeswiet and of Fawcett are given with the view of preventing future confusion. For those canes yet confined to Java see Jeswiet in the Java *Archief* for the years 1916 and 1917.

The colours mentioned below refer to the mature cane, and the male parent is given first.

P.O.J. 33.—Otherwise 33A, Java 33. Chunnee × Striped Preanger. Stalk, light green with red patches. No rind or growth fissures. Wax layer, thick and smooth, later black in parts. Wax ring indistinct. Joints, straight, cylindrical to faintly conical, lower ones distinctly inverted conical, 11·5–17·2 × 2·3–2·8 cms. Pith, smooth, firm, juicy, with fistula. Rind, very thick and hard, with coloured bundles. Growth ring, horizontal, bulging above eye, smooth, brown green, often bordered with red. Root ring, somewhat swollen, lower part conical, upper cylindrical, conspicuous light green, 2-3 rows of roots. Eye channel, visible as a flattening above the eye. Eye, very small, oblong elliptical, germinating point more or less central, nervature radial, hem of overlying flap very wide. Group hairs, 1, 2, 4, 10, 12, 13, 14, 19, 21 constant; 6 very seldom. Leaf sheath 27 cms. long, both auricles present, outer small triangular, obtuse, inner large, pointed arrow shaped. Leaves, dark green, 3·2–4·6 cms. wide. Group hairs, 51, 52, 53 54, 58, 59, 61, 70.

P.O.J. 36.—Chunnee × Striped Preanger. Stalk, light green-yellow, overlaid with red, later with red splashes. Numerous rind fissures visible as red stripes, no growth fissures. Wax layer distinct in younger joints, later remaining as black patches. Joints very zigzag, cylindrical concave on eye side, convex on opposite, 12 × 2·5 cms. Pith, dense, coarse with small fistula. Rind very thick and hard. Growth ring very wide, horizontal, bulging slightly above eye, often with a red border. Root ring inverted cone or cylinder, 2-3 rows of roots, dark yellow, often tinged purple. No eye channel. Eyes, broad, almost elliptical, compressed, upper part wide, lying close to the stalk. Germinating point nearly central, nervature almost radial. Group hairs, 1, 2, 3, 4, 7, 8, 10, 12, 14, 18, 19, 21, constant; 5, 6, 11, 22, 25, variable. Leaf sheath, 28·5–31 cms. long, with small, inconspicuous ridge. Inner auricle always and outer sometimes present. Ligule, broad, bow-shaped over eye. Leaf dark green, 3·9–4·1 cms. wide, leaf callus olive-green, with yellow margin. Group hairs, 51, 52, 53, 54, 57, 58, 60, 61, 64, 66, 70, 71.

P.O.J. 100.—Loethers (putative) × Black Borneo = Hitam Bandjermassin. Stalk, gold-yellow to green-yellow, with red sun splashes, olive brown to green, with red striping, where protected. Rind fissures infrequent. Wax layer thin and smooth, wax ring plain. Joints slightly zigzag, cylindrical to rather conical, eyeside concave, convex on opposite, 14-20 × 2·75–3 cms. Pith delicate, juicy, with small fistula. Rind soft. Growth ring, light brown to gold yellow. Root ring, yellow to yellow-green, some green and brown, 2-3 and sometimes 4 rows of roots. Eye channel on two-thirds of joints. Eye lozenge-shaped to round, wide wing, obtuse top, pressed to stem. Germinating point, apical, with nervature converging to top. Group hairs, 1, 2, 4, 6, 10, 12, 21, 26 and 11 sometimes. Leaf sheath 24-34 cms. long with conspicuous ridge. Inner auricle always present, half pipe-shaped, pointed, or half halbert-shaped, blunt; outer auricle when present small. Ligule, bow-shaped, smooth. Leaf, 5-6 cms. long, light green, outer edge of callus with long fringe of hairs.

P.O.J. 139.—Chunnee × Striped Preanger. Stalk, yellow-green to yellow, frequently with a purple tint. No rind or growth fissures. Joints, feebly zigzag, cylindrical to conical, concave on eye side, convex on other, sometimes showing under the bud a very distinct knot, 8–12 × 2·5 cms. Pith, smooth, firm, with fistula. Rind, hard. Growth ring wide, smooth, bronze-green to light orange. Root ring, strongly developed, cylindrical, waxy, 2-3 rows of roots. Eye channel visible as a flattening in upper joints. Eyes, small, egg-shaped to elongated egg-shaped, with obtuse top and wide wing, germinating point apical, with radial nervature. Hair groups, 1, 2, 12, 13, 14, 21, 26, constant, and 10, 15, 19 occasional. Leaf sheath, 24 cms. long, light green, enveloping eye. Inner auricle present, long triangular, outer one usually absent, of same shape, but smaller. Ligule very wide. Leaf 3·5–4 cms. wide, callus brown-yellow to yellow-green. Hair groups, 51, 52, 53, 58, 61.

P.O.J. 213.—Chunnee × Black Cheribon. Stalk, dark purple to brown-red. Rind fissures in older joints, no growth fissures. Wax layer at first plain and thick, diminishing with age, wax ring sharply defined. Joints slightly zigzag, cylindrical, slightly concave on eye side, convex on opposite, 15–23 × 2–2·5 cms. Pith smooth, often with a fistula, rind hard. Growth ring horizontal, wide, smooth, yellow splashed with red. Root ring cylindrical, more or less concave, broader than stalk, dark brown, 2 rows of roots. Eye channel almost always absent, distinguishable in older cane as a flattening. Eye, elongated egg-shaped, triangular point, broad wing, very flat, germinating point apical, nervation converging to top. Hair groups, 1, 2, 12, 19, 21, 26, constant, 10 11 variable. Leaf sheath, 27 cms. long, with fissures 1·5 cms. long. Auricle almost always absent, small and stumpy. Ligule very wide and smooth. Leaf 3·5 cms. wide, callus yellow-green, waxy. Hair groups, 51, 52, 53, 54, 57, 60, 61, 62.

P.O.J. 228.—Chunnee × Black Cheribon. Stalk, rose-brown, splashed dark brown. Rind fissures present, no growth fissures. Wax layer, distinct and smooth, later becoming black. Wax ring in young joints. Joints straight, inverted cone below, cylindrical above, concave on eye side, very convex on opposite, 9-15 × 2·2–2·7 cms. Pith smooth and massive, small fistula; rind thin and tough. Growth ring horizontal, bronze to brown-yellow. Root ring wide, slightly concave, 2-3 and sometimes 4 rows of roots. Eye channel scarcely noticeable. Eye very large and wide with basal wing, obtuse above with small indentation at top, lying close to stalk. Germinating point central, nervation more or less radial. Hair groups 1, 2, 4, 6, 10, 11, 12, 13, 14, 16, 19, 21, 26; 20 occasionally, 25 seldom. Leaf sheath 27-31 cms. long, light green with some purple, striped with wax. Inner auricle always present, very large half pipe-shaped, outer auricle when present same shape. Ligule nearly horizontal bow-shaped above. Leaf 3.5 cms. wide. Hair groups 51, 52, 53, 57, 58, 61, 66.

P.O J. 234.—Lower joints green tinged with purple upper yellow-green with thin brown striping, wax layer thick. Rind thinner than in other Java canes. Growth ring, bronze where exposed and pale green or yellow in upper joints. Two or three rows of roots. Wax ring narrow and in lower joints thickly covered with wax. Eye channel conspicuous in middle joints. Eye narrow semicircular below upper part making an angle a little less than 90°. Germinating point almost apical, nerves fine and numerous. Hair groups 1, 3, 12, 21, 23, 26 constant; 2, 10, 16, 18, 19 variable. Inner auricle when present is 1-2 mms. long. The outer auricle is 5-10 mms. long and always present. Leaf is long, narrow dark green, callus pale yellowish green.

B. 247.—Canne Morte or Red Fiji × Black Cheribon. Stalk, brown red to reddish purple, flesh rose where protected. Rind and growth fissures present. Wax layer distinct and very thick on young cane, decreasing with age, wax ring conspicuous. Joints zigzag, somewhat conical, bobbin-shaped in quick-growing cane, slightly concave on eye side, convex on other, 12-14 × 3.25 cms. Pith very smooth, often shrivelled in the older central parts. Rind hard, growth ring green, brown to red. Root ring green, brown red splashed, 2-3 rows of roots and sometimes 4 on eye side. Eye channel rather often absent and only conspicuous on younger joints. Eye, broad egg-shaped with lozenge-shaped top, flat and close to stem. Germinating point apical, and nervation converging to top. Hair groups 1, 2, 4, 11, 12, 19, 21 constant, 10 sometimes, 5 seldom. Leaf sheath 30 cms. long with ridge 15-17 cms. long, 2 mm. high. Auricles absent. Ligule bow-shaped, smooth, very small. Leaf 5·5–6 cms. wide, upright with tops overhanging.

WORK OF PERROMAT IN MAURITIUS.

In 1891 the individual enterprise of Perromat obtained a number of seedlings, some of which have become cultivated to some extent there. Amongst these are:—

MP 33.—A green recumbent cane, often with some peculiar abortive joints, medium girth, long internodes, a descendant of the Penang or Salangore cane.

MP 55.—A dark purple medium-sized cane. A descendant of the Penang or Salangore cane. In the previous edition this cane was referred to as 53.

MP 131.—A small, upright, purple cane, extremely prolific in the number of canes to a stool.

WORK OF BARBER AND VENKATARAMAN.

Work in India has only started within the last few years. The task here is different from elsewhere and lies in the problem of combining in a hybrid the valuable characters of the indigenous Indian canes with those of the richer tropical kinds, so as to obtain varieties suited to the extensive subtropical areas of northern India. The preliminary studies so far published indicate that a valuable research from the ground up is in process, but so far the establishment of a new variety is not on record.

OTHER LOCALITIES.

Seedlings have also been raised in Louisiana, L 511 being of promise, in Porto Rico at the Insular Station, at Guanica Central, and at Fajardo Central. Seedlings have been put out from these stations identified by the initials P.R., G.C., and F.C. Of these, G.C. 493 and G.C. 701 have reached the plantation scale. The Argentine station at Tucumán under the direction of Cross has also recently entered this field of research.

Asexual Variation.—In addition to sexual variation the cane is subject to *per saltum* variation or sporting, whereby varieties are obtained asexually. The first definitely recorded observation of this phenomenon is as follows* :—

In 1868 or 1869 a M. Lavignac[24] caused canes to be brought to Mauritius from New Caledonia. Amongst these was a striped cane which was named Mignonne. A few years later M. Louzier observed a self-coloured yellow cane in a stool of this striped cane. He segregated this cane, which he succeeded in establishing into a variety—the Louzier—which for a generation formed the bulk of the cultivation in Mauritius. A few years later Mr. J. F. Horne[25] in the same island noticed that the Louzier cane threw a striped sport, which has also been cultivated separately under the name of Horne cane or Louzier rayée. Another, or possibly the same sport from the Louzier, has been cultivated in Australia under the names of Green Rose Ribbon, Brisbane, Malay, and White Striped Bourbon.

Simultaneously Melmoth Hall[26] in Australia observed the same phenomenon to occur with the "Ribbon" cane, an observation repeated by J. F. Clarke[25] in Queensland with the Striped Singapore. In this case he records that the sports thrown were apparently identical with the Rappoe: as will be shown later, this is the cane described under the name of "Cheribon."

A third instance of importance is the sporting habit of the Tanna canes, from the striped variety of which the White and Black Tannas were segregated in Mauritius. As other instances, may be cited that of the Yellow Tip which was obtained in Hawaii from the Striped Tip ; and the Port Mackay Noir, from the Port Mackay in Mauritius.

In this habit of sporting a complete cycle obtains : striped cane—self-coloured cane—striped cane ; but it is impossible to say which was the original type. Possibly the habit reflects a hybrid sexual origin between a coloured and a white cane.

When sporting occurs from a cane striped in a dark and a light colour, a dark-coloured sport and a light-coloured sport may be obtained. In the Tanna and Cheribon canes the two sports have many characters in common, an observation which would tend to discredit the hypothetical white and coloured parents.

It is a matter of very considerable interest to note that almost all the light-coloured sports are indistinguishable, as are also the dark-coloured sports ; thus nearly every sport from a striped Tanna is either a White or a Black Tanna, and only two varieties thus arise. An exception to this rule was found by Mr. E. W. Broadbent in the Hawaiian Islands, who observed a green and yellow-striped cane, quite distinct from the striped

---

*A report on the sugar industry of Louisiana appearing in the Report of the U.S. Commissioner of Patents for 1848 shows that the phenomenon was well known to Louisiana planters at that time.

Tanna, as sporting from a White Tanna. In addition, during the writer's residence in Mauritius he was shown a number of "varieties"—possibly identical and certainly closely allied to which the name Louzier rayée was applied. In such a case a cane variety may be regarded as throwing a limited number of distinct sports, or the observation may be indicative of a mixed cultivation of barely distinguishable varieties.

Asexual variation or sporting is recognised only when some prominent characteristic, such as colour, varies. Sporting however may very well occur in the absence of means of ready identification, and possibly valuable strains or varieties have thus arisen, and continue to arise, but have been lost for lack of means of recognition. Correlated with the colour change, other characters also vary. Thus the White Tanna has become cultivated as a valuable cane, the Black Tanna being rarely found in extensive cultivation. Local conditions also seem to determine the economic value of the twin sports; thus the dark-coloured sport from the Cheribon, Java, etc., cane has been established in Java and Louisiana, while in Cuba and the West Indies generally it is the light-coloured sport which is favoured.

A sporting habit would account, too, for the minor differences, such as absence of setæ on the leaf base, to be found on individual canes in fields of supposedly pure cultivation. Further, as already mentioned, sexual descendants of a variety generally resemble the parent or parents; accordingly, as has been suggested by Harrison[20], a plantation grown from a pure stock may in time become made up of the original stock, and of those sexual descendants which resemble the parent. Such a state of affairs, due to the combined influence of sporting and the presence of seedlings, may account for the different results obtained in different districts from what is thought to be one and the same variety.

In the instances discussed at length above, and which have afforded very valuable varieties of cane, a distinct and easily recognised variation serves to establish and to fix the variety. Variation, however, may and probably does occur without any easily recognized sign whereby it may be identified. Attempts, almost entirely confined to Java, have been made to correlate certain features of the cane with valuable characteristics, and in this way to obtain new varieties or rather strains. These attempts include the following features:—

Disease immunity and inheritance.—As regards inheritance of sereh and yellow-stripe disease it has been found that the incidence of the disease tends to decrease when disease-free cuttings are used for seed, the reverse action obtaining when unselected tops or tops from diseased stalks are used. This observation has been of great value in Java.

Sugar content.—Based on the knowledge that the seed from sugar-rich beets afford a rich strain, attempts have been made to obtain sweet strains of cane by selecting for use as tops cuttings from sweet canes. Early results in the West Indies gave no promise of success, but Kobus[27] in Java obtained in experiments definite results, and further observed that the heaviest canes were the sweetest, so that the routine of the selection was much simplified. Following on his work, Nash[28] and others in Java selected tops on a specific-gravity basis, believing that the descendants of such tops would maintain that characteristic combined with a high sugar content. The whole question has been the subject of further detailed studies, and of much controversy in Java, with the unhappy finding that this means of improving the cane is not well founded. The original experiments in Java seem to have ignored the root branching system of the cane, later studied by Barber. Other characteristics that have been examined in the hope of finding a correlation with desirable features are :—Tillering, long joints *versus* short joints, thick stalks *versus* thin stalks, conical joints *versus* cylindrical joints, flowering and not flowering. No amelioration of the cane and the establishment of no permanent strain has resulted from these experiments and, generally, it was found that the characteristics themselves were not inherited ; thus the asexual descendants of canes that had flowered showed no greater tendency to flower than did the progeny of canes that had not flowered.

The Classification and Identification of Canes.—This section is to be read as dealing only with the thick tropical canes which form almost the entire mass of the cultivation outside of India, where canes of a different type produce upwards of 2,000,000 tons of sugar annually. These last varieties are discussed elsewhere.

The older writers, who frequently were not systematic botanists, generally adopted colour of the stalk as the criterion of classification. This system is used by Vieillard[29], Fawcett[30], Harrison and Jenman[31], Soltwedel[32], Krüger[33], Stubbs[34], Dahl and Arendrup.[35] Bouton[36], however, based his classification of Mauritius canes on length of internode, and Debassyns[37] in Réunion as long ago as 1848 divided canes into such as flowered and did not flower. The divisions adopted by Harrison and Jenman are (1) yellowish green and green canes often blotched with red ; (2) white, vinous and brown canes ; (3) grey or pink-tinged canes ; (4) ribbon canes ; (5) claret and purple canes. Stubbs and also Krüger only employ three classes :—(1) yellow and green canes ; (2) ribbon canes ; (3) solid colours other than yellow and green. While the colour of the stalk is at once seen to be a ready aid to identification, it manifestly breaks down as a criterion of classification as it would necessarily separate those closely allied sports where colour alone forms the distinguishing feature.

In addition to colour Krüger[33] uses as means of identification the following characteristics :—Presence or absence of wax, shape and arrangement of internodes, shape of eye, presence or absence of channel above eye, rows of roots, colour of pith, colour of leaf sheath, pilosity of sheath, colour of leaf blade, shape of lobes at junction of sheath and blade, general characters.

Cowgill[23] uses all these characters and places most reliance on variations in parts of the stalk. Sahasrabuddhe[38] suggests the use of the eye of the cane as a means of identification, and distinguishes five types :—(1) White Trans parent type—flat, broad, pointed, with point extending beyond ring with a distinct channel ; (2) Bourbon type—flat triangular buds, more or less pointed with an indistinct channel ; (3) White Tanna type—as in (2) but more or less circular ; (4) Meligeli type—long, narrow pointed, extending well beyond the ring with distinct narrow channel ; (5) Mammary type—circular buds with no channel.

Very recently Barber[39] in India, Jeswiet[40] in Java, and Fawcett[41] in Argentina have made detailed morphological studies of canes, including such points as the venation of the leaf and the arrangement of the groups of hairs on the eye and leaf sheaf. The groupings recognized by Jeswiet are indicated in *Figs.* 14, 15, 16, 17 and 18 ; 14 is the upper side of an eye with apical growing point ; 15 is the corresponding underside ; 16 is the upper side of a

PLATE V.

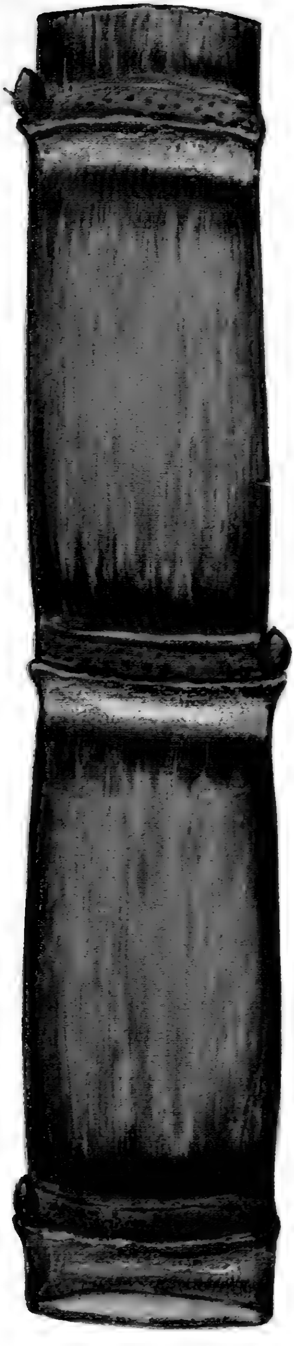

$\frac{3}{4}$
SIZE

WHITE TANNA.

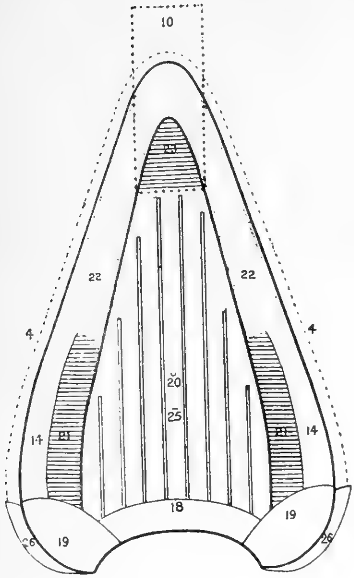

FIG. 14

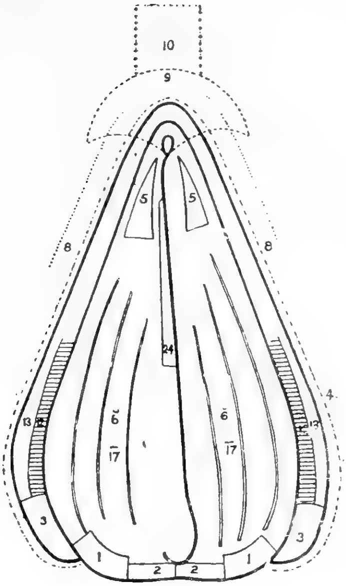

FIG. 15

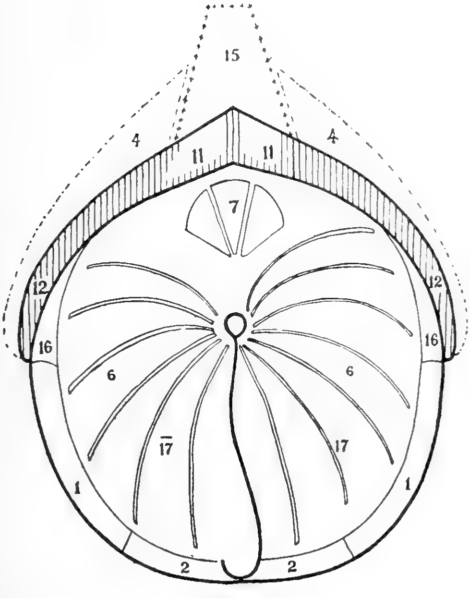

FIG. 16

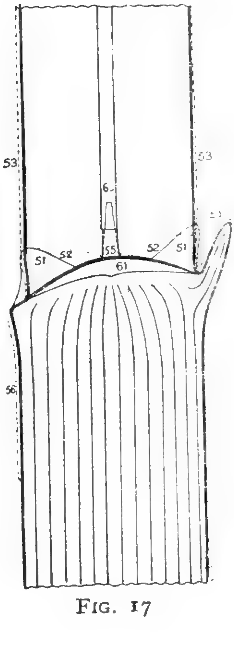

FIG. 17

round eye with central growing point ; 17 is the inner surface of a leaf sheath, 18 being the outer surface of the same.

Without in the smallest degree deprecating the very great value of these studies, familiarity with the cane growing in the field in combination with coloured drawings made by a skilled artist under the direction of a competent botanist, will not fail to have its uses.

THE HISTORY, INTRODUCTION, NOMENCLATURE AND IDENTITY OF THE TRADITIONAL VARIETIES.

A study of the sugar cane literature of a generation back would have led to the idea that hundreds of varieties were in cultivation ; actually the older varieties reduce to two of major importance, to one of importance, and to a few of interest. The confusion has been due to the decentralized position of, and lack of co-ordination between, different cane-growing districts. In this way the same variety was repeatedly introduced and exchanged, each time acquiring a new name, and forming a new local variety. In addition, great confusion has often arisen from misplaced or misread labels. The absence of system has included the following methods of naming :—

1. Country of origin. 2. Country whence obtained. 3. Plantation where first grown. 4. Name of introducer or of prominent local individual. 5. Some pronounced characteristic of the cane. 6. Native name. 7. Confusion of names in exchange.

The great state of uncertainty has been ended through the detailed descriptions of collections published by Fawcett,[29] Harrison and Jenman,[31] Stubbs,[34] Dahl and Arendrup,[35] Bouton,[36] Soltwedel[31] and others. To appreciate the matter thoroughly, it is necessary to give a résumé of the history of the introduction of varieties.

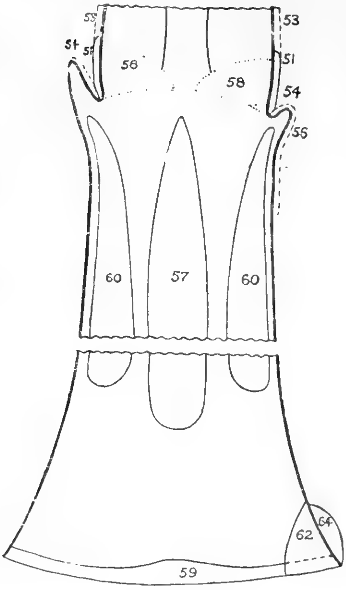

FIG. 18

In the old-world tropics the cane had been growing from ancient times, especially in southern China and in India. It was seen in the Philippines by Magellan in 1570, and the use of sugar is recorded as common in Java in Pretty's account of Drake's circumnavigation. The cane was found established in the islands of the South Pacific by all the early voyagers, and is also recorded in Hawaii by Captain Cook.

The cane travelled westwards from India (and north to China). It was established in 600 A.D. at Gondeshapur at the mouth of the Euphrates, where Christian monks were the first to make white sugar. Arabic civilization carried the cane to the Levant, through the Mediterranean and to Spain, where well before 1,000 A.D. a flourishing industry was established. The Crusades served to develop the western appetite for sugar, and to still further secure the Mediterranean and Levantine industry. In 1420, Henry the Navigator sent the cane to Madeira, and later it reached the Azores, the Canaries, and the Portuguese West African settlements. From this time dates the declension of the Mediterranean industry, its disappearance from the Levant following on the advent of the Turk with the fall of Constantinople in 1453. Forty years later marks Columbus's second voyage and the introduction of the cane to Hispaniola, now Santo Domingo. In 1520 it reached Mexico, 1532 and 1533 seeing its arrival in Brazil and Peru; 1620 and 1751 are the dates of introduction to Argentina and Louisiana, Jesuit fathers in both cases being responsible. The introduction to the French and British Antilles dates from about 1630, that at Barbados being known with assurance as 1641. The Mauritian industry was founded by Mahé de la Bourdonnais in 1737; 1817 is the date of the first Australian introduction, 1850 being that of Natal, in which year also Ismail Pasha restored the Egyptian industry.

Up to the end of the eighteenth century the New World knew only one cane, the descendant of that due to Moslem civilization. When, owing to later introductions, it was necessary to find a distinctive name for the variety, the term Creole was adopted.

In most sugar-growing countries of the New World this cane appears to have been almost lost, and it was not till 1920 that the writer through enquiring diligently was able to locate a specimen apparently authentic. This he obtained through the good services of Sr. E. L. Colon and Dr. F. S. Earle, of the Porto Rico Insular Experiment Station. *Plate* I (page 1) shows this cane as it appears before the yellow colour of maturity is established. Contemporary literature shows, however, that the Creole cane is yet planted in Brazil, the context of many passages serving to connect the cane with the one under discussion. The caña blanca of the south of Spain still grown there is currently believed to be that brought by the Arabs, and should then without doubt be this very cane. In Louisiana the term Creole cane has now become attached to the purple Java cane (*q.v*), to which in earlier years the name Bourbon had also been misapplied, and finally in Argentina the term Criolla morada, blanca and rayada are also connected with the same cane and its sports.

The Creole cane was of a yellow colour when ripe, and of a more slender habit than the canes of later introduction. An analysis by Casaseca[42] gives the fibre as high as 16·4 per cent. It is perhaps to be associated with the Pooree cane of India, since in a report to the East India Company of date 1792 there is found the remark: "West Indian planters say the same sort which grows in the West Indian Islands."

The credit of making the first deliberate introduction of a new variety is probably to be given to Bougainville, who sailed round the world in 1766-68. He touched at Otaheite, and to this voyage is ascribed the introduction of the Otaheite cane to Mauritius and Bourbon.*

In 1782 Cossigny[8] imported to Mauritius direct from Java a number of varieties, which he carefully cultivated and distributed locally in 1789. Through his influence the French Government imported these canes to their West Indian colonies, including Cayenne, and along with these canes there was at the same time taken the Otaheite cane, which on arrival also received the name of Bourbon. A Martinique planter by the name of Pinel gave some cuttings of this cane to a Montserrat planter in 1793, and in the same

---

*Bougainville's account of his voyage makes no mention of the introduction, which seems remarkable. The authorities for this statement are Humboldt, who received his information in the West Indies about 1800, Loret quoted by Légier, and Bouton, a resident of Mauritius. The statement of Cuzent that Bougainville brought a violet cane from Java to Otaheite in 1782 is evidently a confusion of the dates and introductions recorded in this section.

year Admiral Sir John Laforey brought these varieties to his estate in Antigua.[40]

In 1791, Captain Bligh made his second voyage to the South Pacific for the purpose of introducing the bread fruit to the West Indies. Incidentally, he brought a number of varieties of canes from Otaheite. He reached St. Vincent in the ship " Providence " in January, 1793, but the introduction of the canes seems to have been to Jamaica. Four of the varieties that he brought have been placed on record in illustrations of remarkable beauty by Tussac.[3] These are :—1. A green cane with prominent eyes and slightly staggered joints. 2. A yellow cane, which as represented is a typical Otaheite, Bourbon, Lahaina or Louzier (*q.v.*). 3. A very stout purple cane. 4. A violet and yellow-striped cane. Of these canes the second is that which has survived as a standard variety. Canes apparently identical with the first and fourth can still be found in the West Indies as strays.

At the very time of their introduction confusion regarding the origin of these canes seems to have arisen. Thus Sir John Laforey[43] writes :— " One sort brought from the Island of Bourbon, reported by the French to be the growth of the coast of Malabar. Another sort from the island of Otaheite. Another sort from Batavia. The two former are much alike, both in appearance and growth, but that from Otaheite is said to make the best sugar. The Batavian cane is deep purple on the outside."

This confusion was noted by Tussac, who, in 1801, was preparing his *Flora Antillarum* in Jamaica. He quotes the opinion of Mr. Wouels, Director of the East Botanic Garden, that the Otaheite and Bourbon canes are the same. Mr. Wouels had been several times to Otaheite, and he is probably the gardener who accompanied Captain Bligh, and who stayed in Jamaica to take care of the products introduced. Another cane mentioned by Tussac as already established in Jamaica is the Ribbon cane, or " guinguan " cane of Java. This cane has survived as a well-known variety, and Wray[44] thirty years later particularly distinguishes between it and the Otaheite ribbon cane, calling attention to the different coloration, which is well illustrated in Tussac's drawing. The native name of this cane seems to be To Oura.

There seems to be no evidence whatever connecting the Bourbon cane with the coast of Malabar beyond the qualified statement made to Sir John Laforey. On the other hand, the Creole cane is frequently referred to in the older literature as coming therefrom, and possibly the supposed connection arose in this way.

At the time the introduction of the Otaheite cane was considered a feat of first-rate economic importance, as indeed it was, and its connection with Bligh and the mutiny of the " Bounty " added largely to the romantic interest of the introduction. The increased yield obtained from it is said to have doubled the value of the Jamaica plantations, which at that time were enjoying their period of greatest prosperity.

The variety spread rapidly to other districts, being brought to Cuba by Arango[45] in 1795, to Trinidad by Begorrat[46] in 1792, to Barbados by Firebrace[47] in 1796, to Demerara in the same year, to Louisiana in 1797, and to Spain in 1816. Shortly after the French introduction to Martinique it was brought to Cayenne by Martin, and in 1810 it was sent from "Guyana" to Brazil by Brigadeiro Manuel Marques, where, after cultivation in the Botanical Gardens, it was distributed. An independent introduction was due to Manuel Lima da Pereira, also in 1810, and he was the first to grow it exten-

STRIPED TANNA.

sively in Brazil. The fame of the cane spread to the Dutch East Indies, and Crawfurd[48] records that in 1820 it was the variety most cultivated; by 1840, however, its cultivation there had almost ceased. It did not reach Mexico till 1840, when it was introduced by Hermenegildo Felix,[49] being first planted at Chiconcuac.

The Otaheite canes as existing in that island have been briefly described under their native names by Cuzent.[50] It seems likely that the cane he describes as *To Oura* is the Otaheite Ribbon cane referred to above, and that the native name of the yellow Otaheite cane is *Vaihi*, or *Uouo*.

About 1780 the Dutch also introduced canes from Java to St. Eustatius and to Surinam.[32] These canes included a purple cane and a ribbon cane and duplicated those introduced by Cossigny. There was also then probably introduced the cane known at an early period as the Java Yellow Violet, and which is the same as the White Transparent. These canes also travelled through the West Indies and reached Louisiana in 1825, through the agency of Coiron, where they eventually became known as the Home Ribbon and Home Purple. From Louisiana they were brought to Hawaii, becoming known there as Louisiana Striped and Louisiana Purple. In 1840 the light-coloured variety was taken to Mexico by Manuel Maria, and grown at the St. Nicholas plantation.[49] The Java Yellow Violet may perhaps be that mentioned by Tussac under the name of "bonne blanche," or "good white," which he describes as having a green stalk washed with violet.

A very interesting reference to the canes grown at the beginning of the nineteenth century is made by Humboldt. He mentions three varieties as under cultivation in the West Indies and Venezuela:—the Otaheite cane, the Violet cane, and the old Creole cane. He mentions the fears of the Cuban planters that the newly introduced Otaheite would not ratoon as long as the Creole, and actually the cane that has survived as the fittest under Cuban conditions is the Transparent or Yellow Violet of Wray, known in Cuba as the Crystalina.

The introductions referred to above have a most important bearing on the cane sugar industry. Some later introductions are referred to below.

In 1848, after the Otaheite cane in Mauritius had suffered from an epidemic, Sir William Gomm, then Governor of Mauritius, caused canes to be introduced from Java.[35] One of these became widely planted under the name of Bellouguet; this cane is none other than the Purple Java cane already referred to. Two other canes introduced at the same time were also cultivated under the names of Diard rose and Diard rayée. The first of these was at that time known in Java as Japara. These canes are probably to be identified with the Java Yellow Violet, White Transparent, Crystalina, etc., and with the Red Ribbon, Guingham, Striped Cheribon, etc.

In 1854 two varieties of cane arrived at the Hawaiian Islands direct from Otaheite in the ship "George Washington," Captain Pardon Edwards.[51] One of these became the standard cane of those islands, and received the name of Lahaina from the district where it was first cultivated.

In 1857 the original Otaheite (Cayenne) stock in Brazil had become infected with disease, and introductions were made from Mauritius, Herman Herbst, an intelligent German gardener, being sent there. He returned with the Penang, the Diard, and a cane rechristened Vermehla or Rouxada, the descendants of which are still cultivated in Brazil.

A little before 1870 many introductions were made to Mauritius from Java, Brazil, and New Caledonia, the last-named introductions being due to Lavignac.[52] The origin of the Louzier cane from this introduction has already been discussed. Amongst the Brazilian canes was the Uba, which since then has travelled to, and become a standard cane in, Natal, Mozambique and Madeira.

In 1827 an introduction of Mauritius canes was made to British India by Captain Dick, acting on behalf of Captain Sleeman.[53] These canes constitute the Paunda canes of India, and are also known as Mauritius canes.

About 1880, Mr. W. G. Irwin introduced to the Hawaiian Islands canes from New Caledonia. Amongst these was that since known as Yellow Caledonia, and which is the same as that extensively grown in Mauritius as White Tanna.

The Australian sugar industry is based on canes introduced in 1817 by Scott from the South Pacific. One of these which received the name of Yellow Tahiti is stated by Melmoth Hall not to be the Otaheite of the West Indies.[54] Since then there have been numerous introductions from Java and Mauritius, and much confusion in nomenclature has arisen. A late introduction early in the twentieth century under the direction of Maxwell[55] brought in New Guinea canes, of which the Badilla and Goru varieties are of merit.

In addition there have been numerous unrecorded introductions and exchanges between botanical stations and private individuals.

Amongst all these introductions, with their multiplicity of names, there are only a few that have ever been extensively cultivated. These are discussed below, and, in reading this discussion, what the writer means by an identity must be explained. In any extended area of pure cultivation, that is to say of canes asexually descended from one definite parent, canes can be found differing morphologically from each other, although outwardly similar in appearance, habit and general behaviour. These differences, which may or may not be permanent, are often sufficient to persuade a systematic botanist to separate the pure cultivation into a number of varieties. With these differences, which may arise from climatic and cultural conditions, this section is not concerned, and identity is broadly considered, implying rather the possession of similar outward appearance, habit, and mode of growth, with the absence of any readily distinctive and permanent feature not shared equally by all specimens.

The Otaheite Cane.—Under this title the writer refers to the Bourbon (British West Indies), Lahaina (Hawaii) and Louzier (Mauritius). The origin of these has been given and the writer regards them as identical, or so nearly allied as to be not readily distinguishable ; he has seen the Bourbon in Demerara, the Louzier in Mauritius and the Lahaina in Hawaii. In addition, he has compared in Mauritius Lahaina imported direct from Hawaii with local Louzier and Caña Blanca imported direct from Cuba with Lahaina in Hawaii. Nevertheless, these identifications were made without knowledge of the morphological characteristics studied of later years by Barber[39], Jeswiet[40] and Fawcett[41] ; and in addition in this connection the questions of sporting in regard to not easily recognizable characters and the presence of self-sown, inbred adventitious seedlings are to be considered. A study of the literature also affords some reason for thinking that two almost identical varieties are included. Thus Stubbs[34] equates Yellow Otaheite, Louzier, but separates them from Portii, Lahaina, Keni-Keni, which he considers identical ; Harrison and Jenman identify as the same, Bourbon, Cuban, Lahaina, Otaheite, but separate Keni-Keni. The late Mr. D. D. Baldwin, in a letter appearing in the *Hawaiian Planters' Gazette*, May, 1882, states that Capt. Edwards brought two varieties, which became known as Cuban and Lahaina; to the former the names Oudinot and Keni-Keni (Haw. *Kini-Kini*, numerous, in allusion to its prolific nature) being also applied.

He distinguishes them :—

Lahaina.—Long straight leaves of light colour heavily aculeated or covered with prickles at the base, with small round prominent buds.

Cuban.—Leaves of darker green bending down in graceful curves, with no prickles and large triangular buds located in little cavities on the side of the cane stalk.

The following irregularities in nomenclature may be noted :—

1. In Réunion a purple cane (the Black Cheribon) is called Otaheite.

2. The Bourbon, described by Stubbs as so called at Audubon Park, is the White Cheribon, Crystalina, etc., but previously and at an early date the term Bourbon had been attached in Louisiana to a purple cane, probably that imported indirectly from Java.

3. Following Cousins,[56] the Otaheite in Jamaica is the White Transparent or White Cheribon.

4. The name Portii first appears as Teboe Portii imported to Mauritius from Java, 1869, and described as a chalky white cane of high reputation in the Straits, and hence was not originally the Otaheite cane, but probably the Salangore (*q.v.*).

5. Owing to the confusion in transport, the name Louzier has been applied to the Cavengerie (*q.v.*) in the Argentine.

6. A similar confusion is responsible for the naming of a certain variety Loethers in Java under the impression that the Louzier of Mauritius was being dealt with. The cane of this name figured by Soltwedel[31] and Krüger[32] is a brown cane, quite distinct from the Louzier and not dissimilar from a cane known in Mauritius as "Tamarind."

7. A purple cane was introduced in 1890 into Java from the Straits under the name of Bourbon, and is stated by Geerligs to be very similar to the Cheribon. Van Deventer, however, describes the Bourbon of Java as very similar to the Striped Preanger.

This cane is shown in the *Frontispiece*; the illustration was prepared from a ripe Louzier cane in Mauritius. It combines the characteristics of heavy tonnage, long ratoonage, sweet and pure juice, and fibre content of 11·5–12·5 per cent. when grown under normal conditions. It mills easily and the bagasse steams well. In the Hawaiian Islands, under irrigation and with 20 months' period of growth, it has frequently in individual fields given over 100 tons of cane and over 12 tons of sugar per acre, with a purity in the mixed juice of over 90. On occasion large areas have produced a crop with over 18 per cent. of sugar in cane; and with individual canes containing over 20 per cent., the average over the whole of the Hawaiian Islands is rather over 15 per cent. It is, however, a shallow rooter, and hence susceptible to drought ; it responds very quickly to untoward soil conditions and possesses a very low degree of immunity to various fungus diseases. In fact most of the historic epidemics (*cf.* Chapter IX) have been connected with this variety.

From 1800 to 1900 it was the standard cane of the British West Indies, but never succeeded in establishing itself in Cuba in competition with the Crystalina. From 1760 to 1848 as the Jaune de Otaheite, and again from

1870 to 1900 as the Louzier it was the dominant cane of Mauritius. From 1854 up to 1914 it was the only cane grown on the irrigated plantations of the Hawaiian Islands, but began to fail about 1910. Up to the last century it was cultivated in Java and it has been a standard cane in Brazil

The various names attached to this variety (or very closely allied varieties) are :—

> Otaheite, Bourbon, Louzier, Portii, Tibboo Leeut, Keni-Keni, Cuban, Bamboo II, China II, Colony, Lahaina, Singapore, White Mexican, Solera, Ardjuno, Caña blanca, Cayenne (in Brazil), Caña verde de Jujuy and Bambu blanca (in Argentina).

Cowgill[22] has given the following detailed technical description :—

> " *Otaheite.*—Habit, erect to reclining. Length, medium. Diameter, medium to large. Shape of stalk, curved. Colour, greenish-yellow, a glaucous ring on the lower half of the node. Internodes varying much in shape ; typically rather tumid, but sometimes with sides straight, and when tumid most so on the side opposite to the one which bears the bud ; somewhat flattened, usually more or less staggered ; furrows, medium to shallow. Nodes, medium size, longest on the bud side ; leaf-scar set more or less oblique, and projecting somewhat prominently from beneath the bud ; the portion above the leaf-scar about the same diameter as the internode above, except when the latter is tumid ; the depressed ring, forming the portion below shallow ; rudimentary roots in two or three rows. Buds typically sub-elliptical to ovate in outline, but varying in size and in relative length and width ; apex, semi-elliptical to acute ; margin, narrow and conforming to the shape of the bud ; no prominent lobes ; sometimes hairy on, and bearded near, the apex. Foliage, medium abundant, light green in colour. Leaf of medium width and length, tapering into a long and fine point. Leaf sheath rather flattened at the throat ; auricles medium to large, often long and acute, pointed on one or both sides of the stalk ; ligule medium length, with the upper edge depressed in the centre. Vestiture of leaf sheath : many setæ which are stiff and not closely appressed. Vestiture of throat of sheath : a small amount of medium or of fine hairs on or adjacent to the auricles. Most important distinguishing features : shape of the buds and of the internodes."

Very recently, and after the above section was in the printers' hands, Fawcett[57] in Argentina analysed certain canes of this type in Argentina. He finds that the Lahaina (presumably an authentic and recent importation from Hawaii) is identical with the local Bambu blanca, and very close to the Caña verde de Jujuy, but distinct from the Cayenne of Brazil (for the origin of which *v. sup.*) and the local Louzier. These observations are to be correlated with the subject matter of this section, dealing with the introduction of the Otaheite canes and the differences of opinion which have existed now for over 100 years. The influence of sporting in so far as regards the morphological distinction observed, their permanence, the adventitious presence of self-sown self-fertilized seedlings closely resembling the parent, all bear on this matter, as well as the distinction between and definition of the terms " variety," " group," " type," etc., etc. ; and indeed when the writer equates Otaheite, Cayenne, etc., he only strictly says that a cane from Otaheite travelled via Mauritius, the West Indies, and Cayenne to Brazil, where it received the name of the district whence introduced.

Still later, the writer obtained access to Burlamaqui's " Monographia de Canna de Assucar," 1862. He there distinctly notes the existence in Brazil of a green, a yellow, and a striped Otaheite. The bearing of this observation of record on the above section specially, and on the subject matter of this chapter generally, will be apparent.

The Batavian, Java, or Cheribon Canes.—The earliest reference to varieties of canes in Java, or indeed anywhere, is to be found in Rumpf's

Plate VII.

BLACK TANNA.

"Herbarium Amboinense." He describes three canes, one yellow, a second purple, and a third striped, and it is very possible that these may be those forming the subject of this section. The canes referred to by the writer under this heading are frequently mentioned in the early literature as Batavian canes, and there seems to be little doubt but that they are indigenous to Java. In the British West Indies these canes have become generally known as Transparent canes; in Cuba the light-coloured variety is known as the Crystalina*; elsewhere the term Bamboo canes has been applied to them. Three varieties are known, a light coloured, a dark coloured, and a striped variety. These are connected with each other by a complete cycle of *per saltum* variation.

The variety has been the subject of many exchanges and introductions. It has probably produced more sugar that all other varieties combined. As Crystalina it has been and remains almost the only cane cultivated in Cuba. For over forty years the dark-coloured variety was the principal cane grown in Java, where its extended cultivation was established by Gonsalves[58] in 1850. After the epidemic of the 'forties which affected the original Otaheite stock in Mauritius, resource was had also to the dark-coloured variety known as Belouguet.

In Mexico it is also a standard variety. As White Transparent it has been largely grown in the British West Indies, and as Home Purple has formed the bulk of the Louisiana crop. Grown under normal conditions it has from 10 to 11 per cent. of fibre, and the bagasse afforded appears to "steam" badly. The percentage of sucrose and the purity are very high, but inferior to that afforded by the Otaheite when the latter is grown under the best conditions. Similarly, under the same conditions, it is not such a heavy cropper, but is more resistant to fungus diseases and is of a "hardy" nature; that is to say, it is not so readily affected by untoward conditions and careless cultivation. Like the Otaheite it does not deteriorate rapidly after maturity, and affords a long period of ratoonage.

The following irregularities in nomenclature may be noted:—

1. The dark-coloured variety is termed Otaheite in Bourbon.

2. In the collection at Audubon Park, New Orleans, the term Bourbon is applied to the light-coloured variety.

3. In Jamaica, the light-coloured variety is, according to Cousins,[56] the Otaheite cane brought by Bligh.

4. Stubbs[33] states that the striped variety came originally from Tahiti and is generally known as the Otaheite Ribbon cane, but he does not give references, and this statement is in opposition to the earlier references already quoted.

5. In Demerara a cane introduced under the name of Meera is identical with the dark-coloured variety: *Meera* is a Malay term meaning red, but the Tibboo Meera of Soltwedel is quite distinct.

6. Rappoh is a Javanese term applied to a number of canes. In Queensland the term Rappoe or Rappoh is well established in connection with the light-coloured variety. The Tibboo Rappoh of Soltwedel is a greenish-brown cane with a well-marked bluish-white layer of wax at the node; the terms R. Kiang, R. Malda, R. Koenig and White Rappoh also occur.

8. The name Seete is applied by Fawcett[28] and by Dahl and Arendrup[34] to a greenish-yellow or white cane.

---

*Crystalina may be the literal translation of Transparent or *vice versa.*

9. The term Crystalina has been given to the Salangore cane.

10. The Tibboo Soerat Mauritius of Soltwedel is an entirely different cane. (*Soerat* is a Malay term meaning "ribbon," and *Tibboo, Tebu* or *Tabor,* merely means "cane.")

The nomenclature of this very important cane has been more confused than that of any other. This is due to its introductions and re-introductions, to its profound sporting habits, and to its appearance varying with conditions of growth. A number of coloured drawings of canes accepted by the writer as illustrative of the variation in this variety are preserved in the Kew Herbarium. They were made under the direction of Sir Daniel Morris. The names attached to this variety are :—

> *Light-Coloured Variety.* La Pice, Le Sassier, Panachee, Tibboo Mird, Light Java (Louisiana); White Transparent, Caledonian Queen, Mont Blanc, Burke (British West Indies); Rose Bamboo (Hawaii, Mauritius, Australia). Rappoe (Australia); Diard Rose, (Mauritius); Crystalina, Cineza (Cuba and Mexico); Japara (Java); White Cheribon, Mexican Bamboo, Naga B. Blue, Hope, Green; Mamuri, Yellow Singapore; Yellow Violet, Criolla blanca and Caña India de Jujuy (Argentina).
>
> *Dark-Coloured Variety.* Purple Transparent (British West Indies); Louisiana Purple, Home Purple (Louisiana); Belouguet, Diard, (Mauritius); Black Cheribon, Tibboo Etam, Gonsalves (Java); Queensland Creole (Australia); Caña Morada (Latin America); Black Java, Purple Violet, Tabor Numa, Purple Mauritius, Purple Bamboo, Moore's Purple, Dark Coloured Bamboo, Meera.
>
> *Striped Variety.* Red Ribbon (British West Indies); Home Ribbon (Louisiana); Striped Mexican, Striped Louisiana (Hawaii); Striped Cheribon, Striped Preanger (Java); Diard Rayée Guinguam (Mauritius); San Salvador, Seete, Striped Bamboo, Mauritius Bamboo, Transparent; Criolla rayada (Argentina).

Cowgill[22] has given the following technical description of the striped (Rayada) and the light-coloured (Crystalina) varieties.

> *Rayada.*—Habit, erect to recumbent. Length, medium. Diameter, variable but averaging about medium. Shape of stalk, more or less curved. Colour, longitudinally striped with reddish-purple and light green, the stripes varying in width with different stalks and different internodes; more or less glaucous. Internodes, medium to short, slightly flattened, typically plump, and more or less tumid on the side opposite the one on which the bud occurs, sometimes straight-sided, often staggered; furrow, medium to shallow but usually broad. Nodes, medium size; the portion above the leaf-scar often a little smaller in circumference than the internode and usually a slightly projecting ring at the dividing line of the node and the internode above; the depressed ring forming the portion below typically deep, especially below the bud; the leaf-scar projecting from beneath the bud; rudimentary roots in about three rows. Buds, varying in size and in relative length and width, typically broadly ovate-accuminate to broadly ovate in outline, sometimes obtuse-angular; usually plump; point, rounded to medium acute; margin, medium to wide, typically with medium to large lobes on the sides, often bearded at the point. Foliage abundant, the dry leaves also retained far down on the stalk, medium green in colour. Leaf, medium width, medium length, tapering into a long point. Leaf sheath flattened laterally; auricles, medium to small, sometimes pointed on one side of the stalk; ligule, medium length, with the upper edge rounded in outline. Vestiture of leaf sheath, a few short setæ in a line on the back. Vestiture of throat of sheath, medium coarse hairs on, or adjacent to the auricles and on the edges of the base of the leaf, also sometimes pubescent on the surface of the base of the leaf. Most important distinguishing characteristics, colour and the shape of the buds.
>
> This is the striped cane which is widely cultivated on this island. It is apparently closely related to the Crystalina variety.
>
> *Crystalina.*—Habit, erect to recumbent. Diameter, medium. Shape of stalk, usually curved. Colour, varying from shades of greenish-red to straw colour, sometimes tinted with violet or purple; very glaucous. Internodes, varying in length, but averaging about medium; varying also in shape, often tumid on the side opposite the one on which the bud occurs, typically plump, and flattened laterally; furrow, medium depth. Nodes, medium size, typically larger in the

upper part; the lower portion a distinctly depressed ring which is deepest below the bud; the leaf-scar projecting prominently from beneath the bud, but adhering closely to the stalk on the opposite side; rudimentary roots in three or four rows. Buds, varying in length and width, usually plump; typically broadly ovate-acuminate to triangular, with a margin medium to wide; sometimes broadly ovate or semi-elliptical; lobes typically distinct; may or may not start to expand on the standing cane. Foliage abundant, some of the dry leaves also adhere to the stalk, medium green in colour. Leaf, medium width, medium length, tapering into a long, acute point. Leaf sheath somewhat flattened laterally at the throat; auricles medium size; ligule, medium length, with the upper edge rounded in outline, or occasionally slightly depressed in the centre. Vestiture of leaf sheath, a few setæ in a line on the back. Vestiture of throat of sheath, medium coarse hairs on auricles, adjacent edges, and face of the leaf, and sometimes fine hairs on the surface of the base of the leaf. Most important distinguishing characteristics, colour and the form of the internodes and buds.

The following technical description of the Black Cheribon was given the writer by Dr. Kobus:—

> Colour, dark violet-red; internodes, cylindrical, arranged in a faint zigzag line; eye, cordiform; rows of roots, three to four; channel above the eye, distinct on two-thirds of the internodes; colour of the pith, white; leaf sheath, green-pink when sun-exposed; few hairs on back; blade of leaf, dark green, broad and long, top bending over, slightly lobed on one side at junction of sheath and blade; arrows occasionally, female fertile, male sterile.

These varieties are illustrated in *Plates* II, III, IV (pages 16, 33, 37). The light and striped varieties were drawn from canes grown in Mauritius as Rose and Striped Bamboo. The dark-coloured variety was drawn in Hawaii from an imported Louisiana Purple.

A number of other varieties have been grown in Java, and as mention of them occurs in the literature, and as they too have been introduced to other countries, their names are placed on record. Of such there are Tibboo Meerah or red cane, Tibboo Itam or black cane, this term being also applied to the dark-coloured variety described above, Tibboo Soerat or striped cane, the term *Soerat* appearing in many combinations, Assep, Njamplong, Awo de Passeroan, Awo de Teloek Djambo.

Van Deventer[52] describes a number of canes of interest in Java. Of these the description of the Japara cane and of the Striped Preanger coincides remarkably with the characteristics of the light-coloured and striped variety forming the subject of this section. It is, however, remarkable that the Java literature does not, as far as the writer has been able to find, contain any discussion of bud variation and the relationships between striped and self-coloured canes. Other canes imported into Java in recent times and which have been used in breeding and similar work are the green-striped and black Borneo canes; the Fiji cane or Canne Morte, the White and Black Manila canes and the Batjan canes in striped and self-coloured varieties. The White and Black Manila canes may be synonymous with other canes here described.

The Tanna or Caledonia Canes.—The canes referred to under this heading, like the Batavian canes, are found in a dark, light and striped variety, and are also connected by a complete cycle.

The cultivation, which is almost entirely confined to the light-coloured variety, began only in the last quarter of the nineteenth century and is confined to Mauritius, Hawaii, Fiji, and Australia. It is interesting to note that Captain Cook records that the canes that he saw on the island of Tanna were much larger than those that he saw on the island of Otaheite, and such a difference still obtains between the varieties now cultivated under those names. The island of Tanna lies very close to that of New Caledonia, and this may account for their presence in both islands, and for the double name.

All these varieties are very stout canes with internodes short in proportion to length; the percentage of fibre lies between 13 per cent. and 14 per cent., and the percentage of sugar seldom rises above 14 per cent. Under the most favourable conditions of cultivation they are distinctly inferior to the Otaheite and Batavian canes but succeed under climatic conditions unfavourable to these. They are deep-rooting and hence drought-resistant, and are also of a fungus-resistant type. Their high percentage of fibre makes a crusher or other device necessary for successful milling, and their bagasse is of such a nature as to steam well.

Owing to their later period of introduction, the confusion in nomenclature found with the older varieties is not so intense; the synonyms found are:—

Light-Coloured Variety.—White Tanna (Mauritius), Yellow Caledonia (Hawaii), Malabar (Fiji), Daniel Dupont (Clarence River district of Australia),
Striped Variety.—Striped Tanna, Big Ribbon, Maillard.*
Dark-Coloured Variety.—Black Tanna.

These three varieties are shown in *Figs.* V, VI, VII (pages 44, 48, 53), which were prepared from Mauritius-grown canes. The following description is due to Cowgill[20]:

> " *Yellow Caledonia.*—Habit, erect. Length, long. Diameter, above medium. Shape of stalk, straight. Colour, greenish-yellow, tinged with red on the upper internodes and where exposed to the sun; with fine dark-coloured cracks in the epidermis; more or less glaucous on the lower part of the node. Internodes, long and quite uniform; typically straight-sided, but sometimes slightly constricted and sometimes slightly sub-conical; no furrow. Nodes, rather large; the portion above the leaf-scar long and about the same diameter as the internodes; about four rows of rudimentary roots; leaf-scar projecting prominently from beneath the bud. Buds, usually small but uniform, about as broad as long, typically ovate to sub-elliptical in outline, plump and with a margin narrow but uniform as to width, and following the shape of the bud; scales, of fine texture; bearded at the tip and sometimes pubescent on the sides. Foliage, abundant, green leaves inclined to adhere to the stalk rather far down, but the dry leaves are shed; medium dark in colour. Leaf broad, long, tapering medium abruptly into a point. Leaf sheath, large in circumference at the throat, colour light green with sometimes a pinkish tinge; auricles, small; ligule, medium length, with the upper edge depressed in the centre. Vestiture of leaf sheath, a few setæ in a line on the back. Vestiture of throat of sheath, short hairs on the auricles, adjacent edges and face of the base of the leaf, and sometimes back of the ligule; also sometimes finely pubescent on the base of the leaf. Most important distinguishing characters, colour, cracks in the epidermis, and form of the internodes."

The Salangore Cane.—This cane has a very peculiar history. Wray[14] writing in 1848 from experience in the Straits Settlements, describes it as the finest in the world, and to his description is to be attributed the long sustained interest in this variety. The most general experience on this cane is however thus given by Harrison:—" Some of us will doubtless recollect the time when Mr. A. would plant a few acres of Salangore cane in the hopes of getting better field returns and richer cane juice; how these Salangores in some years flourished and raised hopes of heavy returns of sugar, how in others they unaccountably languished; but how, whether they flourished or languished, one thing invariably characterized them—miserably poor juice and consequent loss of money."

---

*In the previous edition " Guingham " was given as a synonym of this cane; this term, due to a once popular striped cotton fabric, was applied to the striped Java as early as 1800 in Jamaica. There has been some confusion, however, and in some references the name seems to refer to the striped Otaheite. The term " False Guingham " also appears and may refer to either of these canes.

Wray, however, is not solely responsible for whatever of extension has been granted to this cane. About 1843 it was, according to Bouton,[38] brought to Mauritius by Giquel, and it was established as a cultivated variety by Noel; but also in Mauritius, where it remained for many years in somewhat extended cultivation, there was the same irregularity in its behaviour as was later observed by Harrison. It has also been grown to some extent in Brazil and Porto Rico, and under the name of Green Transparent still survives in Demerara. Harrison and Jenman[31] thus describe this cane :

"Cane numerous, erect, rather under average height, of nearly average girth, much under average length of internodes, nodes slightly contracted ; colour, whitish or greyish, suffused often with a grey hue, and touched with carmine where sun-exposed. (Rarely arrows). Panicles large, copiously bunched and flowered and well projected."

In addition, Wray records the presence of numerous setæ, of much wax on the stem, and the adherent nature of the dry leaves.

The names found attached to this cane are :—

Salangore, Portii, Tibboo biltong beraboo, Tibboo cappor, Pinang (Mauritius, Brazil) ; Chinese (Bourbon) ; White Mauritius, Green Transparent, Chalk Cane. In certain Spanish writings the term Caña Rocha or Waxy Cane seems to refer to this variety.

Two canes introduced to Trinidad and named by Purdie, Green and Violet Salangore, do not seem to be connected with this variety. *Plate* VIII (page 60) shows this variety drawn from a specimen obtained in Porto Rico.

The Cavengerie Cane.—The cane which the writer has met under this name, and which is referred to here, is a claret-coloured cane with an inconspicuous yet clearly defined bronze green, almost black, stripe. It possesses the peculiarity of not infrequently throwing variegated or albino leaves. An almost black sport, called Port Mackay Noir, is known in Mauritius.

This cane is probably of New Caledonian origin, for, amongst those imported to Mauritius about 1869 by Lavignac, appears the name Kanangari, following the spelling in the *Sugar Cane*, 1870, 2, 674.

A very recent communication from Mr. Alfred Watts[61], however, states that a cane received in Brazil from Mauritius about 1884 is a self-coloured claret cane, so that some confusion is indicated. The same communication states that a red cane with black stripe (the subject of this section) received in Brazil, owing to misplaced labels, the name Louzier (*q.v.*), the real cane of that name becoming known in Brazil as Port Mackay, the name usually attached in Mauritius to the cane under discussion. This double confusion has spread with cane importations from Brazil to Argentina and very recently the Uba cane (*q.v.*), also from Brazil, has in Argentina become established as Kavengire. Yet another confusion has obtained in Java, where Krüger describes as Port Mackay a yellow-green cane with handsome prominent brown blotches where sun-exposed.

In Sagot and Raoul's "Manuel pratique des Cultures Tropicales" appears a list of New Caledonia canes transcribed from a manuscript of M. Greslan of date 1884. Amongst these appears the Kavarangi canes, described as dark red splashed with carmine. This description corresponds with the statement of Mr. Alfred Watts quoted above. In Porto Rico three canes probably of this identity are recognised—a black, a red, and a striped. The writer found Cavengerie in Mauritius as applied to the striped variety; and under the spelling Scavenjerie Delteil also classed a striped cane, presumably the one in question.

The names under which this cane appears are:—Cavengerie, Po-a-ole, Altamattie, Port Mackay (Mauritius), Caña Francesca (Porto Rico), Santo Domingo (Cuba). It is illustrated in *Plate* IX (page 65) from a Port Mackay as grown in Mauritius.

This cane affords a less pure juice than the Otaheite. Cheribon and Tanna canes, but seems to be adapted for extra-tropical localities. It has been cultivated to some extent in Mauritius, Australia, Argentina and Porto Rico, where it was introduced from Mauritius after a disease epidemic in 1872.

The detailed description by Cowgill[22] follows:—

> *Cavengerie.*—Habit erect to reclining. Length medium. Diameter medium. Shape of stalk more or less curved. Colour dark wine or greenish-red, with faint greenish to bronze longitudinal stripes; the lower part of the node more or less glaucous. Internodes nearly round in cross-section, medium to long, typically almost straight-sided, but sometimes inclined to be tumid in the lower half; often more or less staggered; furrow very shallow. Nodes small; the leaf-scar often oblique, usually a slightly prominent ring at the upper limit of the node; the depressed ring forming the portion of the node below narrow and shallow; two, to occasionally three, rows of rudimentary roots. Buds usually dark in colour, typically plump and very short, with the margin scarcely perceptible, and the point round and obtuse, set in a cavity of the stalk; but sometimes longer and the point more acute. Foliage abundant, medium green in colour. Leaf medium width, medium to short, semi-erect, tapering to a fine point rather abruptly. Leaf sheath slightly flattened at the throat; colour reddish green, striped with light, longitudinal stripes; auricles small; ligule medium to narrow, turned in toward the stalk, and with the upper edge depressed in the centre. Vestiture of the leaf sheath many sharp stiff setæ. Vestiture of throat of sheath straight, rather short hairs on the auricles, adjacent edges of the leaf and leaf sheath, and sometimes on the face of the base of the leaf. Most important distinguishing characters, colour, striped leaf sheath, and form of the buds.

Bamboo Canes.—This term frequently appears in the older literature, and is very generally applied to the varieties described under the term Java or Batavian canes. In the Hawaiian Islands a cane still grown on higher elevations is called Yellow Bamboo, and was originally brought forward as a graft; it is probably an introduced cane of uncertain origin. It is a rather small yellow cane, with a narrow rich green leaf, the sheath of which is thickly covered with prickles; the internodes are slightly convex, and the eye is small and round.

The term Bamboo is also at a very early date attached to the Kullore, Cullerah or Kulloa cane of India. This is described by Roxburgh[5] as a light-coloured cane, growing to a great height, and to be found on swampy land. Delteil[62] describes it of a yellow, pale green, and pink colour. Stubbs[21] calls attention to its enlarged nodes and prominent eyes.

The Tip Canes.—The Striped Tip, and its *per saltum* variant the Yellow Tip, are grown at higher altitudes in the Hawaiian Islands. The striped variety is a small, thickly stooling cane striped dark red and pinkish green, changing at maturity to yellowish red and yellow. The sheaths of the young leaves have light-purplish margins and are covered with long prickles which rub off easily and disappear as the leaf dies. The eye is large, long, and pointed; the nodes are prominent, and the internodes concave and channelled from the eye upwards. The self-coloured variety is similar, but with absence of the purple leaf margin.

These canes are very similar to certain canes found in Mauritius, under the names Branchu rayée and Branchu blanche.

The Uba Cane.—This cane is of peculiar interest and history. It first appears in the more recent history of the cane as one of a number imported to Mauritius from Brazil in 1869[3], and it is mentioned as a well-established variety in Brazil in a report appearing in the *Sugar Cane* for June, July and August, 1879.

In 1882 and 1883 Messrs. Daniel de Pass & Co., of Réunion, Natal, imported canes from both Mauritius and India. Among these was one bag with a damaged label on which was to be read the letters "Uba," and these letters were taken to be but a part of the name of the cane, and hence arose a legend that the Uba cane represented another with a longer name containing these letters, whereas actually the correct name had been deciphered from the damaged label.

More lately Barber has recognised this cane as one of the Pansahi group indigenous to Northern India; and its presence in Brazil, evidently from early times, is unexplained. The most reasonable supposition is that it was brought by the Portuguese from India, and not as the writer once suggested that it is the original Creole cane which travelled from India via the Mediterranean to the West Indies.

The origin of the word Uba is to be found in Piso's[65] description of Brazil (1658) where *Viba* (and elsewhere *Vuba*) is given as the native Brazilian term for a reed, and was used at that time as a synonym of the sugar cane. To this cane is also attached the terms "Japanese Cane," "Kavengire" (evidently a corruption and misapplication of Cavengerie), and in Argentina "Bambou de Tabandi" and "Sin Nombre 54."

This cane is very different from other cultivated varieties. It is only about half an inch in diameter, with internodes up to six inches long. It is of a green colour, with a very heavy coating of wax, giving it a bluish bloom, and it contains an exceptional quantity of fibre, reaching up to 17 per cent. The juice afforded by it is of reasonable density and purity.

The Zwinga cane, also in some cases called Japanese Cane, is similar, with the exception of a swollen node, that of the Uba being equidiametrical with the internode. The application of the term "Japanese" merely implies that at some time these canes travelled from India to Japan, and thence to other parts of the world.

Plate X (page 80) shows the cane, as drawn from a specimen obtained in Porto Rico, with ascertained pedigree from Brazil, via Argentina.

The Elephant Cane.—This cane was originally described by Loureiro[66] as growing in Cochin China, and it has acquired a certain celebrity in the literature of the cane. It is stated that it is allowed to grow undisturbed for five or six years as an ornamental plant, when it reaches a height of thirty feet. It is of no importance as a sugar producer, although it has not infrequently been tried on the large scale. The Elephant cane is figured by Soltwedel[29] under the name of Teboe Gadjah as of a very dark greenish-grey, almost black colour, irregularly blotched with greenish-yellow patches. The name does not apparently refer to its size but to its use as a food for elephants.

Indian Canes.—Although India is the oldest of all cane-growing countries, it is only of quite recent years that detailed studies of the numerous varieties indigenous to that peninsula have been made. This neglect is all the more unfortunate since these Indian canes are radically distinct from the varieties grown elsewhere, the origin of most of which is the South Pacific. In the first edition of this book the writer commented on this difference, and suggested a quite independent origin of the Indian and South Pacific canes. The difference has also attracted the notice of Barber[67], who has discussed it at length, and comes to the conclusion that these types of canes are to be separated.

From the older literature of the cane, the following excerpts may be made: Roxburgh[68] mentions the Kujooli a purple cane, the Poorea a light-coloured cane, and the Kulloor a white cane grown on swampy land. The two first are illustrated in a report dated 1824, and due to the Hon. East India Co. Drury[69] mentions the following canes as grown in Mysore :—Restali, Puttaputti, Maracabo, and Cuttaycabo.

The more modern studies commence with Hadi[70], who classifies the Indian canes as they occur in the United Provinces of Agra and Oude into Ukh, Ganna, and Paunda canes. The first class is a very narrow reed-like cane with short internodes, slightly constricted at the node; within the stalk is a well-defined central fistula. The surface colour may be green, yellow or red, or yellow blotched with red. The leaves are small, narrow, and dark green. These canes are avowedly very close to *Saccharum spontaneum.* The one which has become best known outside of India is the Chin or Chunnee cane, used by Kobus as the male parent in his hybridization work in Java.

The Ganna canes are taller and thicker than those in the Ukh class, have no fistula, and their leaves are longer and broader. Of these canes that which has become most known outside of India is the Uba (*q.v.*)

The Paunda canes are the introduced thick tropical canes. One at least, as the Samsara, has travelled as an Indian cane. Mollison and Leather[71] suggest division of Indian canes into five classes. Apparently their A and C classes would correspond with Hadi's Paunda and Ganna canes; their B and D classes including the yellow and green Ukh canes; the red Ukh canes forming their E class.

Barber,[72] in the most recent work, adopts tentatively five classes for canes strictly indigenous to India. These are (1) Mungo group, containing 24 varieties; (2) Saretha group, with 17 varieties, including therein the Chunnee cane; (3) Sunnabile group, with 15 varieties; (4) Pansahi group, with 12 varieties, including the Uba cane; (5) Nargori group, with 12 varieties. The Samsara cane of India is a Paunda cane, which has travelled out again from India as a cane connected therewith.

Mauritius Canes.—The planters of Mauritius have always been industrious in the introduction of new varieties. Occasionally in the literature the names of canes thus introduced appear, and, as a matter of record, some of these names are given :—Branchu, Chigaca, Boisrouge, Canne morte, Mappou perlé, Poudre d'Or, Tamarin, Iscambine. No one of them has ever become important.

Brazilian Canes.—The canes common in Brazil are described by Sawyer.[73] Many of these canes have also been sent to Argentina and appear in the recent literature of that country.

The *Cayanna* or *Antiga* is evidently the Otaheite cane.
The *Black cane* is believed by Sawyer to be the Cheribon cane.
The *Imperial* is a green and yellow-striped cane.
The *Manteiga, Envernizada, Calvacante, Flor de Cuba, San Pello,* are names applied to a butter-coloured cane.

SALANGORE.

The *Aleijada* is a seedling cane destitute of hairs, with one or more abortive internodes on every stalk.

The *Crystalina*, the description of which fits the White Transparent, etc.

The *Roxa Louzier*, introduced from Mauritius.

The *Salangore*, the description of which fits that of this cane already given.

The *Cinzenta* or *Grossona*, similar to the Salangore when young, and at maturity approaching the Cayanna Antiga, and referred to as being of merit.

The *Ferrea* or *Cavengerie*, a bright-purple cane, and hence distinct from the Cavengerie already described.

The *Bois rouge* or *Vermehla*, introduced from Mauritius, and of a ruby-red colour, is regarded as an inferior variety.

The *Bronzeada* or *Roxinha*, resembling the Crystalina when young, and the Antiga at maturity.

The *Cayanninha*, much resembling the Antiga.

New Guinea Canes.—Of late years canes have been introduced from New Guinea to Queensland, the Badilla and Goru canes being of some importance. The following descriptions are due to Maxwell.[55]

N. G. 8*a*, or *Gogari*—Dull, deep-green cane, of moderately stout habit, turning red on exposure ; internodes, 4-6 inches ; occasionally grooved, flesh yellow.

N. G. 15, or *Badilla.*—A dark purple to black cane, stout, with white waxy rings at the nodes, internodes 2-3 inches, often longer in ratoons, of erect habit, foliage somewhat erect, very green and in young cane often of a reddish tinge, flesh white, of high sugar content, often weighs up to 1 lb. per foot.

N. G. 24, or *Goru* or *Goru possi possana.*—A moderately stout greenish-brown to copper-coloured cane, joints zigzag, internodes 34 inches, slight waxy bloom, basal end develops roots, upper eyes sometimes shoot, foliage broad and plentiful, flesh yellow.

N. G. 24a, or *Goru seela seelana.*—Like N.G. 24 but striped with red, moderately stout, internodes 3-4 inches, foliage broad and plentiful, flesh yellow.

N. G. 24b, or *Goru bunu bunana.*—Like N.G. 24 in shape but of a yellow to yellowish green colour, sometimes marked on exposure with reddish granular spots internodes 3-4 inches, eyes full and prominent, foliage broad and plentiful, flesh yellow.

N. G. 64.—A brownish to olive cane striped with claret, with small linear skin cracks, moderately stout, internodes 3-5 inches, contracted at nodes and bulging towards centre, foliage red to purple when young, flesh white.

Hawaiian Canes.—Some of the native canes of these islands have been described by C. N. Spencer[74] as under. The native legends indicate that these islands were settled by voyagers from the South Pacific, who carried the cane, together with other fruits. In such a case the cane would not be strictly indigenous to these islands.

Ko Kea.—A greenish-white cane, not unlike the Otaheite, and the one most commonly grown before the introduction of the latter.

Ainakea.—A green and red-striped cane, which Stubbs, quoting from a letter, says was brought from Mauritius, where it is known, he says, as the light-striped Bourbon. This latter cane, though similar, is within the writer's knowledge distinct.

Oliana.—A yellow very woody cane.

Papaa.—A purple cane.

Palania.—A purple cane.

The Hawaiian purple-leaved cane is called the *Mamulele.*

New Caledonia Canes.—For lists of these under native names, reference may be made to Sagot and Raoul's "Manuel pratique des Cultures Tropicales."

REFERENCES IN CHAPTER IV.

1. The True Grasses, New York, 1890.
2. Plantæ rariores Javanicæ. Berlin, 1848.
3. Flora Antillarum. Paris, 1800-1808.
4. Journey to the Equinoctial Regions of South America. London, 1814-1829.
5. Flora Indica. London, 1832.
6. Herbarium Amboinense. Leyden, 1741-1753.
7. Travels to discover the Source of the Nile in the years 1768-1773. Edin. 1790.
8. Histoire des Origines de Fabrication de Sucre à France. Paris, 1901.
9. A Treatise on Planting. St. Kitts, 1790.
10. Précis sur la Canne. Paris, 1790.
11. Nova Genera et Species Plantarum. Paris, 1815-1825.
12. Hooker's "Botanical Miscellany," 1830.
13. Madeira und Tenerifa mit ihrer Vegetations. Berlin, 1859.
14. *S. C.*, 1869, 1, 161.
15. *Java Archief*, 1893, 1, 14.
16. *S. C.*, 1871, 3, 215.
17. *Agric. Jour. of India*, 1912, 7; 1916, 11.
18. *W. Ind. Bull.*, 1903, 4, 6.
19. Report of the Queensland Acclimatization Society, 1905, 19.
20. *W. Ind. Bull.*, 1911, 12, 20.
21. *S. C.*, 1897, 29, 351; 418.
22. *S. C.*, 1895, 27, 261; 1896, 28, 204, 297, 323.
23. *La. Plant.*, 1917, 64, 342.
24. Communicated by M. Aug. Villèle.
25. W. Ind. Bull., 1900, 2, 4.
26. *S. C.*, 1874, 6, 538.
27. *Int. Sug. Jour.*, 1906, 8, 299.
28. *Int. Sug. Jour.*, 1911, 13, 473; 1912, 14, 371.
29. *Annales des Sciences Naturelles (Botanique)*, 1862, 16, 340.
30. *S. C.*, 1887, 19, 577.
31. *S. C.*, 1892, 24, 192.
32. Formen und Farben Saccharum officinarum. Berlin, 1892.
33. Das Zuckerrohr. Magdeburg, 1899.
34. "Sugar Cane." Washington, 1897.
35. *Sugar*, 12, 1.
36. Espèces des Cannes Cultivées à Maurice. Port Louis, 1869.
37. *Int. Sug. Jour.*, 1912, 14, 324.
38. Espèces des Cannes Cultivées à Réunion, 1848.
39. *Mem. Dept. Agric. in India*, May, 1915, and July, 1916.
40. Beschrijering der Soorten van het Suikerriet.
41. *Revista Industrial y Agricola de Tucuman*, 1919, 9, 130.
42. *Annales de Chimie et Pharmacie*, 1843, 9, 39.
43. Preface in fifth edition of Bryan Edwards' "History of the West Indies."
44. The Practical Sugar Planter. London, 1848.
45. Los Ingenios. Coleccion des Vistas, etc. Habana, 1857.
46. Three Prize Essays. Port of Spain, 1865.
47. *Comptes Rendus*, 1845, 20, 1792.
48. History of the Indian Archipelago. Edinburgh, 1820.
49. Ideas Generales Sobre el Cultivo de la Caña. Oficina de la Secretaria de Fomento. Mexico, 1885.
50. Les Iles de Société. Tahiti. Rochefort, 1860.
51. *Hawaiian Planters' Monthly*. May, 1882.

52. *S. C.*, 1872, 2, 674.
53. *Int. Sug. Jour.*, 1917, 19, 364.
54. *S. C.*, 1870, 2, 668.
55. Report of the Bureau of Experiment Stations, Queensland, 1905.
56. *W. Ind. Bull.*, 1907, 8, 1.
57. *Revista Industrial y Agricola de Tucuman*, 1919, 9, 135.
58. *S. C.*, 1883, 15, 361.
59. De Cultuur van het Suikerriet op Java. Amsterdam, 1916.
60. *S. C.*, 1879, 11, 585.
61. *Int. Sug. Jour.*, 1920, 22, 326.
62. Culture de la Canne à Sucre à Maurice. Paris, 1884.
63. Report of the Royal Botanic Gardens. Mauritius, 1870.
64. *Int. Sug. Jour.*, 1918, 20, 19.
65. De Arboribus . . . . in Brasilia. Leyden, 1658.
66. Flora Cochinchinensis. Ulyssepone, 1790.
67. *Int. Sug. Jour.*, 1920, 22, 249.
68. Flora Indica. London, 1832.
69. The Useful Plants of India.
70. The Sugar Industry of the United Provinces of Agra and Oude.
71. Dictionary of the Economic Products of India. London, 1908.
72. *Agric. Jour. of India*, 1916, 11, 342.
73. Relatorio apresentado a Sociedad Paulista de Agricultura, 1905.
74. Thrumm's "Hawaiian Annual," 1882.

CHAPTER V

The Soils of the Cane-growing Regions

The whole subject of the soil and of soils is one of such great magnitude that no attempt is made here to treat the matter in any but the very barest outline. Soil problems in their general significance are best studied in specialized treatises of which many excellent examples are to be found; the principles there elaborated, though usually exemplified with reference to the conditions and crops of temperate climates, are equally applicable to the cane and tropical conditions.

The cane itself is a plant that requires a large quantity of water, and therefore a soil type that has a considerable water-retaining capacity is preferable. Clay soils in general belong to this type, sandy soils lying at the other extreme. The matter is, however, also influenced by the nature of the underlying stratum, by the height of the water table, and climatologically by the rainfall and its distribution. Artificial factors come into play when irrigation water is available in abundance, whereby the factor of water-holding capacity is largely eliminated.

Classification of Soils.—The classification of soils has been based by students of the question on a variety of lines embracing the rock origin, mode of formation, and physical structure. Based on rock origin, soils are divided into two great classes: those derived from acidic, and those from basic rocks. The former class includes those rocks that contain from 65 to 75 per cent. of silica, those with 40 to 55 per cent. being classed as basic rocks. There is, however, no sharp line of cleavage, and one class passes insensibly into the other. Merril[1] gives the following examples of the composition of typical rocks of the three types:—

		Silica per cent.
Acidic	Granite	77·65—62·90
	Leparite	76·06—67·71
	Obsidian	82·80—71·19
Intermediate	Syenite	72·20—54·65
	Trachyte	64·00—60·00
	Hyalotrachyte	64·00—60·00
	Andesite	66·75—54·73
Basic	Diabase	54·00—48·00
	Basalt	50·59—40·74
	Peridetite	42·65—33·73
	Peridetite (Iron rich)	23·00

The term *andesite*, which was used originally with regard to peculiar formations in the Andes, seems to be used by some writers as almost synonymous with *acidic*. Generally the acidic formations are much older than are

PLATE IX.

$\frac{3}{4}$
SIZE.

PORT MACKAY.

the basic rocks, which are mainly found in regions of comparatively recent volcanic activity. The soils formed from the acidic rocks contain in general more potash than do those of a basaltic origin, these being characterized by the presence of larger quantities of iron and of lime.

The following figures, due to Burgess[2] as the mean result of the analysis of 1547 American mainland soils, and of 515 analyses of Hawaiian soils, illustrate the differences in composition between soils derived from acidic and those from basic rocks. The analyses were made by official American method, *i.e.*, digestion in hydrochloric acid of *sp. gr.* 1·115 for 10 hours at 100° C.

Material.	American.	Hawaiian.	Material.	American.	Hawaiian.
Total silica	85·52	32·63	Manganese oxide	0·12	0·50
Soluble silica	6·40	17·59	Ferrous & ferric oxide	3·81	28·02
Potash	0·40	0·34	Alumina	5·15	20·72
Soda	0·27	0·35	Phosphoric acid	0·16	0·35
Lime	0·75	1·30	Sulphuric acid	0·04	0·32
Magnesia	0·68	1·18	Nitrogen	0·18	0·33

Classed according to physical condition, soil physicists recognise four main types of soils: gravels, sands, loams and clays. To these are to be added intermediate classes as sandy loams, clay loams, etc. The distinction which is based on the size of the soil particles is entirely arbitrary, and one type passes insensibly into another. In the United States the distinction is generally as indicated below—other arbitrary and allied distinctions obtaining elsewhere :—

Gravel :—Particles greater than 0·05 inch in diameter.
Coarse sand :—Particles with diameter lying between 0·05 and 0·02 inch diameter.
Medium sand :— ,, ,, ,, ,, ,, 0·02 and 0·01 ,,
Fine sand :— ,, ,, ,, ,, ,, 0·01 and 0·004 ,,
Very fine sand :— ,, ,, ,, ,, ,, 0·004 and 0·002 ,,
Silt :— ,, ,, ,, ,, ,, 0·002 and 0·0002 ,,
Clay :— ,, ,, ,, less than 0·0002 inch diameter.

A third method of classifying soils separates them into stationary and transported soils. In the former class are those formed *in situ* as on plateaus and on lands of small gradient, and as such their composition reflects that of the underlying rocks from which they are formed. Transported soils are either wind or water-borne, or else have been conveyed by glacial drift. When the motion is slow, as on the gentler slopes of a mountain area, the term *colluvial* is applied ; such a motion usually takes place under the influence of rainfall. When the soil is transported by a river, and finally deposited in its overflow as a silt, the term *alluvial* is used, the glacial drift formation receiving the term *diluvial.*

To these types should be added the peat and bog soils that are formed *in situ*, and to which the term *cumulose* is given ; other distinctions of less importance are those differentiating between humid and arid soils, temperate and tropical formations.

It is at once apparent that all these distinctions overlap. A stationary soil may be either basic or acidic, and an alluvial soil will partake of the nature of the material over which has flowed the river to which its formation is due. This may be either basic or acidic, or a combination of both types, and the nature of the soil will be influenced by the character of the formation upon which the deposit is made.

Tropical Soils.—It may not be going too far to say that the tropical soils upon which the sugar cane is grown fall into two great divisions—those derived from acidic rocks of very ancient formation, and those derived from basic rocks due to comparatively recent volcanic agency. The former class includes most of the continental areas where the cane is grown, and here belong the regions derived from the Andes, Peru, and the north-eastern part of South America which has been built up by the Amazon, the alluvial plains formed by the Nile, and by the Mississippi and the Red River, and the central or Mackay district of Queensland. In much of Java, too, andesite formation is dominant, although recent basaltic rocks also occur. In the other formations fall most of the insular areas formed by comparatively recent volcanic action, and here are included the chain of the West Indian Islands, the islands of Mauritius and Réunion, the Philippines and the Hawaiian Archipelago. The Bundaberg district of Queensland is of this formation also. This distinction, which is broad rather than particular, is open to modification in many ways, the most important being the frequent occurrence of limestone rocks, whether of coralline or other formation. Tertiary limestone formations are characteristic of Cuba, and they also modify the soil type in Java and in the Philippines; the island of Barbados is an instance of an essentially unmodified limestone formation.

A peculiar type of soil especially connected with the tropics is that known as a laterite. This term derived from *latus*, a brick, was originally used in connection with certain brick-red formations, forming a superficial covering over a great part of India. These soils are essentially derived from basaltic rocks, and are characterized by a very high percentage of iron and alumina. When wet they resemble a typical clay, but differ therefrom in not adhering after drying; they are extremely hygroscopic, and when air-dry contain as much as 20 per cent. of water. Besides occurring in India, the red soils of Cuba and other parts of the West Indies, and a great portion of those of the Hawaiian Islands, are typical laterites; they also occur to a considerable extent in the sugar-producing areas of Brazil.

Yet another distinction may be made between soils as they occur in the tropics, based on the climatic conditions obtaining over the epoch of their formation. They fall into the arid and humid types; the former are often red in colour, and the latter are generally black. The colour in the latter case is due to the large proportion of organic matter present, and this forms the main distinction between the two types, since climatic conditions do not affect the composition of the soil, as derived from its rock origin. This distinction into red and black soils is very common; it appears in the Hawaiian Islands, the upland soils formed in a zone of heavy rain being black, while the arid littoral formation affords a typical red laterite. The Cuban soils are also classed as red and black soils, the same distinction obtaining in Barbados. This difference is also recorded in Grainger's didactic poem "The Sugar Cane," written in 1768.

Analysis of Soils.—Many years ago the composition of the soil, as obtained by analysis, was thought to be the dominant factor in determining its fertility. With added experience it has come to be recognised that other factors such as physical condition, tilth, drainage, bacterial activity, and the presence of relatively small quantities of obnoxious substances, have at least an equal importance. The productivity of a soil is, however, not so much governed by the combined effect of all the controlling factors as by the influence of one decisive feature. This is the law of the minimum first put forward by Liebig, mainly with reference to the chemical composition of the soil. Paraphrased, this law states that the crop yield is determined by the deficiency in one element, and not by a sufficiency or superabundance in others. This law may be extended to other influences such as the physical condition of the soil, the available water supply, and the suitability of the soil as a habitat for beneficial soil organisms; and it is only when all these conditions are at a maximum that the maximum crops result. Conversely, when no condition necessary for crop production is absent, a soil may be infertile, owing to the presence of undesirable factors. Such factors may be the presence of reducing substances such as ferrous salts, chlorides to which the cane is to some extent resistant, acidity which may be occasioned by the use of overmuch sulphate of ammonia, and alkalinity, particularly that form known as "black alkali," which may be caused by the overlong use of nitrate of soda.

As now carried out, three schemes are used for determining the chemical analysis of soil. The first, seldom employed except for special purposes, makes a complete analysis, using hydrofluoric acid as the solvent. The second employs strong acid, usually hydrochloric, and the third a weak acid. The two former methods are used to obtain an idea of the potential fertility of the soil over long periods, whereas the third is designed to give information regarding the immediately available plant food. In the comparison and interpretation of analyses, it is necessary to know the method used:—That known as the U.S. official method uses hydrochloric acid of specific gravity 1·115 (22·96 per cent), 10 grams of soil being extracted with 100 cc. solvent for 10 hours at 100° C. The German method employs 25 per cent. hydrochloric acid, the action being allowed to take place over 48 hours at room temperature with frequent shaking. Following on Wiley[3] this scheme dissolves only one-fifth to one-sixth the potash obtained by hot digestion, this latter procedure being also followed generally by British chemists. French practice uses nitric acid as the solvent.

The interpretation of analyses with strong acid as solvent is difficult. Hilgard,[4] referring to hot hydrochloric acid as solvent, states:—"Generally, phosphoric acid less than 0·05 per cent. indicates deficiency, unless much lime is present. Heavier virgin soils with more than 0·1 per cent. and a fair amount of lime, are good for 8 to 15 years' continuous cropping; with less lime 0·2 per cent. is necessary for the same period. Large quantities of organic matter offset low phosphoric acid, which is, on the other hand, rendered inefficient by much ferric oxide. Referring to potash, he fixes the limits in sandy soils, sandy loams, loams and clays as 0·1 per cent., 0·1 to 0·3 per cent., 0·3 to 0·45 per cent., and 0·45 to 0·8 per cent. respectively, and thinks that soils with less than 0·25 per cent. potash are likely to benefit by potash manures. As regards lime for sandy soils and clay loams, he adopts 0·1 per cent. and 0·25 per cent. as the lower admissible limits for normal crop production, and sees no benefit when the lime rises above 2 per cent. The lower limit for nitrogen is usually taken as 0·1 per cent.

As regards the available plant food, the method of Dyer, employing 1 per cent. citric acid as the solvent is very largely used. He considered that when the phosphoric acid or potash fell below 0·01 per cent. the need of manuring with these materials was indicated. This standard is to be regarded as an indication rather than as an absolute figure; for Demerara soils, Harrison has reduced the limit to 0·007 per cent, and other standards not departing much from those proposed by Dyer[5] have been considered as applicable to special conditions by other students of the soil.

Special Points with regard to Cane Soils.—It follows from the survey given above that the cane is grown on soil types of widely variant characteristics. At the one extreme are the very ancient andesite formations, the other extreme being occupied by the laterite soils formed from the more recent basaltic lavas. It would then appear to be unreasonable to say that the cane is peculiarly adapted to any one particular type; neverthelsss, the opinions of various students of cane agriculture are of sufficient interest to be recorded.

The eminent Cuban agronomist, Reynoso[6], wrote in the middle of the last century:—

> " Experience has shown that lime is a necessary element in the constitution of soils most appropriate to the cane; in calcareous soils not only are the most robust canes grown, but these also afford juices richest in sugar from which is easily extracted the desired product. These soils are both of great return and very sacchariferous, but it must not be forgotten that lime is but one element which, associated with others, forms good soils."

Delteil[7], referring to experience in Mauritius and Réunion, makes the following statement:—

> " In mellow open soils, watered by rain or irrigation, the cane becomes fine and large and gives much sugar. In light sandy soils, or in volcanic soils of recent origin, the juice is very sweet, but the canes are somewhat small. In calcareous soils, the canes develop superlatively well, the juice is rich and easy to work. In alluvial soils too moist or too rich in alkalies, the canes have a fine appearance, but the juices are poor in sugar, work with difficulty and produce much molasses."

Bonâme[8], whose experience in Guadeloupe and Mauritius has been very extensive, makes the following pertinent observations on cane soils and climate:—

> " The cane grows more or less well in all soils if it receives the care and manures that its economy demands; but to develop vigorously, and to supply a juice rich in sugar, it demands a deep and free soil. The physical properties of the soil are at least as important as its chemical composition, and if irrigation is possible during the dry season its coolness will naturally be one of the most important factors in the production.
>
> " The most favourable nature of the soil varies with the climate.
>
> " Where rain is abundant the soil should be light and porous; if rains are scanty a too light soil will dry rapidly, and vegetation will be checked; the cane will not completely die, but in place of giving large stalks rich in sugar, it will produce small, hard, dry and woody stalks. With a relatively dry climate a heavy soil will give good returns if the rains are evenly distributed.
>
> " With a rainfall of 5 to 6 metres (197 to 236 inches) a sandy soil, draining easily, will give an abundant return with a high consumption of manure. A clay soil, especially if it is situated on a plain, will be constantly saturated with stagnant water, which will prevent the aeration of the soil; the canes will develop feebly, and their roots will rot little by little, leading to the death of the stalk.
>
> " Some alluvial soils produce a luxuriant vegetation in wet years. The canes are very fine but very watery.
>
> " Other things being equal, a calcareous clay soil, not excessively light, will give sweeter canes than a clay containing vegetable debris, but the yield will generally be less abundant. If the rains are sufficient and conveniently divided, returns both for the cultivator and the manufacturer will be excellent. If the season is wet the advantage will remain with the lighter soils, while if it is dry the canes will suffer much and will afford stunted and woody stalks.
>
> " High and almost constant results will be obtained with irrigation and porous soils; for the growth can be regulated at will, and conducted in a fashion so as to

> obtain the maximum cultural and industrial return, promoting the size of the cane and its leaf development in the first stages of its growth and without intermission, until the time arrives when it is necessary to develop the juices formed at an early stage."

The various points in question are here very ably stated by Bonâme, and briefly it may be said that the cane will succeed on any fertile soil, and that the success will be measured by the extent to which those principles common to all agriculture are carried out. The consensus of opinion that calcareous soils are especially suited to the cane may best be looked at in the light of the knowledge that generally soils thus derived are amongst the most fertile known.

In the course of the soil studies that have been extensively pursued in all parts of the tropics, one or two points of special interest have arisen. Thus Kelly[9] has observed that the large quantities of manganese present in many Hawaiian soils are without any harmful action on the cane, though these soils prevent pineapples from making a normal growth. The cane is able also to grow normally on soils containing a larger proportion of salt, and this property is reflected in some of the ash analyses quoted in Chapter II. Soils of this nature occur in Demerara and the Straits Settlements, and Du Beaufret has recorded that in French Guiana periodic renovation of the cane fields is obtained by flooding them with sea water. The matter has been discussed by Geerligs[10], who inclines to the opinion that, while the cane is not halophilous or benefited by the presence of chlorides, it can still give a normal growth on soils containing considerable quantities of salt.

A type of soil of not infrequent occurrence in the West Indies is the outcrop of limestone, in which the calcium carbonate may reach as much as 40 per cent. Cane grown on these soils exhibits chlorosis indicated by the appearance of longitudinal yellow stripes in the leaves. The appearance is similar to that found in the yellow stripe disease (*cf.* Chapter IX). The condition is caused by disturbance in the mineral nutrition of the plant, and can be remedied by spraying with iron salts[11], though this scheme is not commercially feasible.

Apart from the cane generally but considered only in its varietal aspect, many observations have been made indicating that certain varieties are specific in their choice of soils. Thus the variety B 208 fails in heavy clays but succeeds in lighter soils. On the other hand, D 625 has been found specifically suited to heavy and moderately heavy clays. In Java also similar peculiarities are known; the cane P.O.J. 100 growing best on light friable soils, a second great Java variety, Bouricius 247, preferring a stiff clay. Many other instances of this nature can be quoted.

THE SOILS OF SOME SUGAR-PRODUCING DISTRICTS.

Studies, general and specific and in greater and less detail, have been made of the soils of many sugar-producing districts. Some account of these is given below.

Argentina Soils.—The soils of this locality belong to the acidic type. The following analyses of thirteen soils under cane cultivation are due to Hall.[12]

COMPOSITION OF TUCUMAN SOILS (HALL).

	Maximum.	Minimum.	Average.
Insoluble	85·92	80·02	82·79
Organic matter	10·14	4·76	6·82
Iron and alumina	9·65	7·65	8·55
Lime	0·77	0·41	0·58
Magnesia	0·58	0·13	0·27
Soda	0·37	0·17	0·25
Potash	0·96	0·35	0·65
Phosphoric acid	0·16	0·05	0·09
Sulphuric acid	0·10	0·05	0·07
Carbonic acid	0·04	trace.	0·02
Chlorine	0.02	0·01	0·01
Nitrogen	0·29	0·10	0·18

British Guiana Soils.—The soils of this colony have been critically examined by Harrison.[3] He distinguishes eight types of soil, of which only three occur within the part where the cane is cultivated. These three are :—

I. The clay soils of the alluvial coast lands.
II. The sand reef soils of the alluvial coast lands.
III. The peaty or "pegass" soils of the alluvial coast lands.

Of these soils he writes :—

> "Experience has indicated to us that in Class I we find soils of marked fertility : soils which, with careful cultivation and tillage, should not alone retain their fertility for long periods, but give gradually increasing returns. These are the sugar cane and rice lands of the colony.
>
> "In Class II we have the soils which are not infrequently met with in belts known as sand reefs crossing sugar estates. They are to a great extent practically useless for economic cultivation.
>
> "Class III consists of soils frequently characteristic of parts of the sugar estates, and of which much of the swamps and wet savannahs of the back parts of the alluvial coast lands consists. They also are found very commonly at short distances back from the banks of the lower parts of our rivers and creeks. As indicated earlier in this report, they are essentially peat soils, and as such are unsatisfactory and difficult to work. But given tillage, drainage, and amelioration of their texture by admixture with the underlying clays, they offer mines of wealth in plant food for future agriculturists in this colony."

Harrison states that :—

> "The alluvial soils of British Guiana are largely derived from sea-borne mud from the Amazon river, and are not delta soils of the Guianan rivers.

The mean composition of the coast soils included in Class I he gives as :—

	Per cent.	
Nitrogen	0·209	
Lime	0·212	Soluble in 20 per cent. hydrochloric acid at the temperature of boiling water over five working days.
Potash	0·425	
Phosphoric Acid ..	0·072	

A tract of virgin savannah land, situated six miles west of the Berbice river and four miles from the coast, was found by the writer to be of the following average composition :—

	Total quantities per cent. on air-dry soil.*	Soluble in 1 per cent. citric acid with 5 hours' continual shaking.
Lime	0·153 ..	0·0312
Magnesia	0·539 ..	0·2635
Potash	1·467 ..	0·0162
Phosphoric Acid ..	0·093 ..	0·0034
Humus	6·013 ..	—
Nitrogen	0·479 ..	—

* Determined by solution in hydrofluoric acid.

The soil was a tenacious grey clay underlying a layer of " pegass " from three to six inches deep, and was sampled to a depth of one foot.

British India Soils.—The annexed note on the soils of British India, abridged from an account by Leather[14], treats of the soils generally and not specifically with reference to the cane. Mainly four types are recognised :—(1) the Indo-Gangetic and other alluvial deposits ; (2) the black cotton or " regur " soils ; (3) the red soils of Madras overlying metamorphic rocks ; (4) laterite soils. Generally all the soils contain large quantities of iron and alumina, with ample supplies of potash and magnesia. The lime, phosphoric acid and nitrogen are usually low, being in the order named on an average less than 0·1 per cent., 0·1 per cent., and 0·05 per cent. The quantity of phosphoric acid indicated as available by Dyer's method is not however, unusually deficient.

Cuban Soils.—The soils of Cuba upon which the cane is grown are divided by F. S. Earle[15] into three classes, and are thus described by him :—

> *The Red Lands.*—These are found mainly in Havana and Mantanzas provinces, but they occur also in eastern Pinar del Rio and in certain areas near the coast in the three eastern provinces. This red soil has many peculiar qualities. It is very sticky when wet and is heavy and difficult to cultivate, and yet it allows water to pass through it as readily as through the lightest sand. Within a few hours after a heavy shower, if the sun shines, the surface will begin to dry, and it will be possible to run ploughs and cultivators. There is no subsoil, as the red surface soil extends down practically unchanged to the bed rock, which is always a cavernous limestone pierced with numerous subterranean passages which provide a perfect natural under-drainage. There are very few streams or rivers in the red lands, as the rain water sinks so readily into the soil and is carried off by these underground passages, finally finding a vent in great springs, many of which come out in the bottom of the sea, forming the spots of fresh water which are known to occur along certain parts of the Cuban coast. This remarkable natural drainage makes these soils easy to cultivate during the rainy season, but for the same reason they become too dry for most crops during the winter, except where artificially watered. Irrigation on a large scale will always be difficult on these lands, on account of lack of available streams, and because so much water will soak away in the canals and ditches that a large head will be required in order to cover a comparatively small area.
>
> Taking everything into consideration, these lands are probably the most satisfactory on the island for sugar production. With good management and with favourable seasons the best black lands will yield somewhat heavier crops ; and it is claimed by some that the cane from black lands is somewhat richer in sucrose ; but the crop on the red lands is always certain, never being injured by excessive rains, and it is always possible to give sufficiently frequent tillage to keep down the weeds. The cultivation is cheaper also, as no expensive drainage ditches are needed, and no ridging up of the rows is required, level culture being best for these lands. The red soil is well supplied with the mineral elements of fertility, and, on account of its depth, it stands successive cropping for many years. No soils respond better to the use of fertilizers, and none can be built up more quickly by the growth of leguminous crops for green manuring.
>
> *Black Soils with a White Calcareous Subsoil.*—These occupy large areas in the hill regions in the northern and central parts of Havana and Matanzas provinces. Similar soils occur also in the eastern provinces, usually where the country is more or less rolling. When first cleared such lands are very fertile, but their hilly character subjects them to constant loss from washing during heavy rains. Their durability depends upon the original thickness of the top soil, and on the steepness of the hills and the consequent degree of loss from washing. These soils are fairly permeable to water, but not nearly so much so as the red soils. On account of their more retentive character they cannot be cultivated so quickly after rains, nor, on the other hand, do they suffer so quickly from drought during the dry season. Ditching is seldom necessary except sometimes on the lower portions ; the uneven surface usually affords drainage, and it can be aided by slightly ridging up the rows during cultivation. On the steeper and more broken of these lands, much of the

loss from washing could be avoided by terracing or running the rows in irregular circles following the contour lines, as is done so universally in cotton fields on the broken hill-lands of the southern United States. These irregular, crooked rows seem unsightly and awkward to those who are not accustomed to them, but when properly laid out they are very effective in preventing loss from washing.

Black Lands with Impervious Clay Subsoil.—The black lands that are underlaid with a stiff impervious clay present some of the most difficult problems to the sugar planter. They are naturally very fertile, and, when conditions are favourable, they yield maximum crops. But most of these lands are quite level, and the subsoil holds the rainfall, so that the cane often suffers from a lack of drainage. In wet seasons, too, it is difficult, or often impossible, to give sufficiently frequent cultivations to keep down the weeds. These troubles are not so obvious when the land is new, as the immense number of decaying roots leave the soil more or less open and porous, so that the surface water passes away more readily. With age the soil settles together and becomes more compact and impermeable. All old lands of this class will be greatly improved by establishing a carefully planned system of drainage ditches and keeping them always well cleaned. Ridging up in cultivation, so as to leave deep water-furrows between the rows, will also be very advantageous.

Crawley[16] has published the following analyses of Cuban soils :—

AVERAGE COMPOSITION OF CUBAN SOILS (CRAWLEY).

Province.	Number of samples.	Lime%*	Potash%	Phosphoric acid%	Nitrogen%
Pinar del Rio	66	0·48	0·44	0·40	0·25
Havana ..	30	1·57	0·37	0·51	0·27
Matanzas ..	13	1·62	0·30	0·71	0·21
St. Clara ..	35	1.66	0·33	0·34	0·33
Camaguey ..	26	2·57	0·52	0·40	0·21
Oriente ..	38	2·31	0·59	0·42	0·22

COMPOSITION OF TYPICAL RED AND BLACK CUBAN SOILS (CRAWLEY).

PER CENT.	RED SOILS.				BLACK SOILS.				
Water	9·75	3·87	4·68	10·55	15·88	16·18	20·00	10·98	15·71
Insoluble	43·98	62·46	37·79	42·00	51·69	57·13	57·96	51·93	48·92
Volatile	19·73	—	20·79	14·97	15·89	10·45	12·44	9·44	10·53
Humus	—	0·63	—	5·63	4·82	2·86	2·42	2·66	7·24
Ferric oxide	14·98	11·37	12·72	13·55	10·92	10·11	16·34	12·88	12·36
Alumina	18·80	13·96	25·39	27·00	12·88	15·79	16·34	8·05	4·43
Manganese	0·13	0·11	4·22	0·10	0·18	0·28	0·33	0·16	0·14
Lime	0·31	0·37	0·58	0·16	3·46	2·08	1·76	2·09	3·64
Magnesia	0·48	0·22	0·43	0·98	2·44	2·19	1·16	2·76	2·45
Potash	0·18	0·09	0·18	0·25	0·33	0·19	0·72	0·18	0·52
Soda	0·10	0·37	1·06	0·30	0·09	0·15	0·48	0·86	0·80
Sulphuric acid	0·07	0·19	4·24	0·10	0·16	0·17	0·15	0·20	0·18
Phosphoric acid	0·58	0·20	0·76	0·61	0·73	0·72	0·47	0·24	0·15
Nitrogen	0·19	0·17	0·25	0·12	0·34	0·35	0·20	0·79	0·46

Egyptian Soils.—The Egyptian soils upon which the cane is cultivated are in Upper Egypt, and lie in a narrow strip on both banks of the Nile; the soil is all an alluvial deposit of great depth, overlying a basis of sand, and has been formed, and is continually renewed, by the overflow of the Nile. Numerous analyses have been made of these soils, many of which have been collected by Pellet and Roche.[17] They remark :—

> "The soil of this district is very uniform in its general composition; the percentage of calcium carbonate is from 5 to 7, of sand from 20 to 60, of clay from 20 to 60, of humus 0·8 to 1·3. The very compact nature of the greater part of the soils attracts attention, and certainly influences to a greater or less extent the

---

*Occasional samples testing over 20 per cent. of lime perhaps tend to make the average percentage of this material too high.—(N.D.).

availability of the fertilizing elements. Very remarkable is the presence, rare in arable soils, of a large quantity of magnesia, from 1 per cent. to 3 per cent.

The fertilizing elements, properly so called, were found per kilogram :—

Phosphoric acid	1·44 to 2·30,	mean, 1·75 grms.
Potash	1·56 to 3·68,	,, 2·28 ,,
Organic nitrogen ..	0·37 to 1·40,	,, 0·72 ,,
Nitric nitrogen, trace to	— 0·040,	,, 0·004 ,,

Finally, the quantities of chlorine and sulphuric acid which have so great an influence on the formation of efflorescent salts injurious to vegetation were found in healthy soils.

Chlorine	0·10 to 0·06 per 1000.
Sulphuric acid ..	0·25 to 1·60 per 1000."

The average composition of 28 samples of sugar cane soils is thus given by these authors :—

True density ..	2·23	Potash	0·228
Apparent density ..	1·15	Lime	2·49
Moisture	6·30	Magnesia	2·87
Chalk	6·40	Iron and Alumina ..	10·52
Sand	45·80	Manganese	0·084
Clay	36·40	Organic nitrogen ..	0·072
Humus	1·17*	Nitric nitrogen ..	0·0004
Phosphoric acid ..	0·175	Chlorine	0·005
Sulphuric acid ..	0·073		

The quantities are the percentages soluble in nitric acid, according to the official French method.

The mean of seven analyses of Egyptian soils made by Mackenzie and Burns[18] with hydrochloric acid as solvent gave the following results :—

Phosphoric acid ..	0·246	Manganese	0·26
Potash	0·615	Chlorine	0·064
Lime	0·418	Organic nitrogen ..	0·082
Magnesia	0·270	Nitric nitrogen ..	0·0018
Iron and Alumina	22·15		

The Soils of the Hawaiian Islands.—As this sugar-producing district has yielded, and continues to yield the greatest return of sugar per acre, its soils are of peculiar interest. They have been examined in great detail by Maxwell, Eckart, and Kelly, and to a less extent by Crawley, Shorey and Hilgard. Recently Burgess[2] has made a very detailed study of the soils under cane cultivation in the island of Hawaii.

The dominant factor in the formation of these soils has been the decomposition of basaltic lavas, the product of very recent vulcanism. They are characterized by the presence of large quantities of iron, alumina and lime, with smaller quantities of potash. Phosphates are also present in quantity mainly in the form of apatite.

Maxwell[19] thus classifies these soils :—

A.—GEOLOGICAL FORMATION.

1. Dark red soils :—Soils formed by the simple weathering of normal lavas in climatic conditions of great heat and dryness.
2. Yellow and light red soils :—Soils derived from lavas that underwent great alteration, under the action of steam and sulphurous vapours, at the time of or after emission from craters.
3. Sedimentary soils :—Soils derived from the decomposition of lavas at higher altitudes, and removal and deposition by rainfall at lower levels.

---

*Schloesing's method.

B.—Climate Classification.

1. Upland soils:—Soils formed under lower temperature and greater rainfall, and distinguished by a large content of organic matter and nitrogen, and by a low content of elements of plant food in an available state; these elements having been removed by rainfall.
2. Lowland soils:—Soils formed under a higher temperature and less rainfall, and characterized by a lower content of organic matter and nitrogen, and by a higher content of the elements of plant food in a state of immediate availability; which is due in part to the receipt of some soluble constituents from the upper lands, and to a smaller rainfall over the lower levels.

It is on the dark-red soils and on the sedimentary soils that the high returns of cane have been grown. The sedimentary soils are often of great depth, and sometimes extend down as far as thirty feet.

The colour of the yellow soils is due to ferrous iron, and it is to the presence of this body that Maxwell attributes the smaller productivity of this type.

Peculiar perhaps to the soils of this locality is the not infrequent presence of large quantities of manganese and titanium. Kelly[8] has reported analyses wherein the former, calculated as Mn_3O_4, amounted to 9 per cent., the latter, in some cases, reaching 35 per cent. calculated as TiO_2.

Composition of Hawaiian Soils (Maxwell).

	Dark red soils.		Yellow and light red soils.		Lowland soils.		Upland soils.	
	a	*b*	*a*	*b*	*a*	*b*	*a*	*b*
Insoluble matter	37·20		24·20		35·15		27·87	
Water	6·16		10·48		9·03		12·29	
Combustible matter	11·33	12·16	20·44	23·00	15·46	16·80	20·60	23·30
Insoluble silica		10·06		8·85		10·29		10·67
Soluble silica ..		17·61		9·35		13·39		9·90
Titanium oxide	2·59	6·71	3·20	7·82	1·78	5·07	1·84	5·19
Phosphoric acid	0·19	0·32	0·41	0·57	0·40	0·72	0·47	0·87
Sulphuric acid	0·31	0·33	0·18	0·14	0·23	0·17	0·16	0·13
Carbonic acid	0·18	0·19	0·25	0·20	0·29	0·20	0·03	0·03
Ferric oxide ..	22·94	26·21	28·72	33·27	19·98	25·15	21·81	26·17
Alumina ..	16·84	23·72	9·89	14·12	16·15	23·54	13·62	20·06
Lime	0·34	0·50	0·15	0·28	0·39	0·85	0·29	0·64
Magnesia ..	0·44	0·66	0·74	1·08	0·80	1·35	0·61	0·94
Manganese oxide	0·42	0·28	0·43	0·37	0·19	0·12	0·19	0·15
Potash.. ..	0·39	0·51	0·38	0·51	0·29	0·65	0·27	0·71
Soda	0·75	1·14	0·62	0·84	0·35	1·34	0·39	1·28

a. Official (U.S.) method. *b*. Complete analysis on water-free soil.

Usually the red soils are light, and easily worked, and drain with great facility; though clay-like when wet, they do not become compacted on drying, and may be tilled under conditions of rainfall impossible with true clays. The apparent specific gravity is very low, and Burgess estimates this as 1·1, giving the weight of an acre-foot as only 3,000,000 lbs. The pore space in these soils is thus exceptionally high, a factor which leads to opportunity for rapid drainage, aeration, and large root development. This physical condition is probably as large a factor in the production of large crops as is the chemical composition.

The typical analyses of various types of Hawaiian soils given here are due to Maxwell.

The mean composition of the soils of the different islands, based on the result of 397 analyses by the Official (U.S.) method, is as below:—

	Lime %	Potash %	Phosphoric acid %	Nitrogen %
Oahu	0·411	0·348	0·269	0·119
Kauai	0·504	0·358	0·237	0·246
Maui	0·691	0·401	0·200	0·222
Hawaii	0·833	0·353	0·321	0·338
Whole group	0·693	0·366	0·268	0·290

Maxwell also determined the solubility in 1 per cent. citric acid (Dyer's method) of a number of typical soils. His results, as calculated by the writer, are as below:—

	Lime %	Potash %	Phosphoric acid %
Highest ..	0·281	0·084	0·0125
Lowest ..	0·030	0·009	0·0012
Average ..	0·113	0·033	0·0043

The small amount of available phosphoric acid in proportion to the unusually high total amount present is due to the accompanying ferric oxide. Hilgard[20], in examining Hawaiian soils, calls attention to this point, and also emphasizes the action of the ferric oxide. A similar condition has also been observed in the red soils of Cuba, which are not dissimilar from these.

Other Hawaiian soils examined by Hilgard[21], while containing large quantities of nitrogen, were yet "nitrogen hungry." The percentage of nitrogen in the humus was, however, very low, and he is inclined to attribute more importance to the nitrogen in the humus than to the total quantity. Mr. C. F. Eckart, however, has pointed out to the writer that, as many Hawaiian soils are acid, this "nitrogen hungry" condition may have been due to lack of nitrates, a condition which could be corrected by proper treatment.

Java Soils.—The soils of Java have been derived from fairly recent volcanic rocks, mainly of the andesite type, though basalts are not infrequent. Interspersed throughout the island are also upheavals of cretaceous limestones. Generally, the soils would be classed as clays or clay loams, though laterite formations especially near Pekalongan and Moeria on the mid-north coast are to be found.

The island of Java being mountainous and subject to heavy rains, a great part of the soil formation has resulted from alluvial deposits. This process continues up to the present day consequent on the extensive flooding of the land used for growing rice, following on which a cane crop is grown.

In the development of Java civilisation, the cultivation of rice became the dominant industry, and for this land capable of flood irrigation was necessary. Land thus situated is known as "sawah," in distinction from land incapable of irrigation, which is known as "tegal," or "gaga;" land partly capable of irrigation is known as "sawah tadanah."

A native Javanese term which often occurs in the literature is "tana," which roughly indicates "soil"; there thus appear such terms as "tana tadhu," referring to land along river banks; "tana tinchad," referring to the central plain, and "tana pasir," referring to maritime alluvial deposits; "tana ladoe," indicates a mixed clay and sand, whilst "tana linjad" describes a heavy clay.

Another type of soil of frequent mention in the descriptions of Java is "padas." This term refers to a peculiar surface formation a few inches or many feet in depth. The feature which establishes this type is its extreme hardness, and the presence of stone-like materials scattered through the soil consisting mainly of concretions of chalk and nodules of manganese or iron oxide. These soils, which are the result of recent vulcanism, may often be regarded as laterites in the making. During the past generation very many analyses of Java soils have been made, mainly by Kramers, Kobus, Van Lookeren, Campagne and Marr. The last named has collected all known analyses into the tables quoted below[22] :—

COMPOSITION OF JAVA SOILS. (Marr).

	Surface soil %	Subsoil %	Minimum %	Maximum %
Water	7·5	7·7	1·0	15·0
Hygroscopic coefficient	13·9	14·1	2·0	27·0
Humus	2·1	1·4	0·1	6·0
Nitrogen % humus	3·6	3·5	0·5	6·5
Nitrogen	0·076	0·049	0·006	0·263
Phosphoric acid soluble in 25% hydrochloric acid* ..	0·055	0·054	0·004	0·198
Phosphoric acid soluble in 2% citric acid	0·020	0·021	0·018	0·219
Potash soluble in 25% hydrochloric acid*	0·072	0·071	0·009	0·066
Potash soluble in 2% citric acid	0·027	—	—	—
Lime soluble in 10% ammonium chloride	0·60	0·52	—	—
Sand	13·2	16·4	0·5	76·0
Silt	62·4	58·8	3·6	83·0
Clay	24·3	24·7	1·2	54·0

Louisiana Soils.—Stubbs[23] thus summarizes the sugar soils of Louisiana :

> Our soils, then, of the sugar belt lying along the Mississippi River and its numerous bayous, may be considered as varying from silty loams to very stiff clays.
>
> There are also the red and brown lands, varying from sandy loams to loamy clays of the Red River and its outlying bayous, the Teche, the Boeuf, the Cocodrie and Robert, which have been formed by a similar process by the Red River, though drawn from a much more restricted area of country.
>
> The prairie lands west of Franklin, varying in character from black stiff clays to silty loams, are our bluff lands second-hand, which have been removed from the western bank of the Mississippi River and spread out over the marshes of south-western Louisiana. These bluff lands occur *in situ* on the eastern bank, running continuously from Baton Rouge to Vicksburg, giving us several parishes in which sugar cane is grown. These are usually silty loams, and are also of alluvial origin, though antedating the present Mississippi River. The bluff and prairie lands, and the alluvial deposits of the Red and Mississippi Rivers and their bayous, give the soils upon which the sugar cane of Louisiana is grown.

As the result of many samples Stubbs gives the following average. Contents of the soils in the sugar belt : Lime, 0·5 per cent. ; potash, 0·4 per cent. ; phosphoric acid, 0·1 per cent. ; nitrogen, 0·1 per cent.

Peruvian Soils.—The following account of Peruvian soils is abridged from Sedgwick.[24]

The cane area of Peru lies on the western slope of the Andes, between that range of mountains and the sea, the latitude of the largest district being 7° S. The cultivated areas lie in valleys of a very gentle slope seawards, the

*German method.

drainage notwithstanding being excellent. The depth of the soil is from two to twenty feet, and it varies in character from a fine sandy loam to silt.

The soils are of the alkali type, and especially towards the sea contain considerable quantities of water-soluble chlorides, sulphates and carbonates. The soils are well supplied with plant food, the lime, much of which is present as carbonate, being very high compared with that found in the cane soils of other districts. The total phosphoric acid and potash are also good. The nitrogen is very variable, dependent upon the time the soil has been in cultivation, the water supply, the class of weeds, and the amount of flood waters required to cover the fields. The humus and organic matter are both higher than would be expected in the soils of an arid district.

Sedgwick gives thirty analyses of soils from the Cartavio estates, from which the present writer has calculated the averages. The analyses are presumably made by the official American method.

	Maximum	Minimum	Mean
Insoluble matter	79·50	49·22	63·71
Ferric oxide	8·10	4·00	5·38
Alumina	7·50	1·59	4·78
Lime	6·75	0·65	2·98
Magnesia	2·57	0·23	0·92
Potash	0·60	0·16	0·33
Phosphoric acid	0·43	0·16	0·24
Sulphuric acid	0·88	0·05	0·18
Humus	1·84	0·42	1·26
Potash sol. in 1 per cent. citric acid	0·0258	0·0050	0·0121
Phos. acid sol. in 1 per cent. citric acid	0·0630	0·0081	0·0337

It is interesting to compare these soils with the equally productive ones of the Hawaiian Islands. These soils are "acidic," and contain much more silicates insoluble in hydrochloric acid than do the "basic" soils of Hawaii, the latter containing much more ferric oxide, and it is as a consequence of this that the availability of the phosphoric acid in the Hawaiian soils is so much less than in the Peruvian. The high content of the Peruvian soils in lime is, too, a factor which should contribute to their continued fertility.

Philippine Soils.—Up to the present no extensive survey has been made of the soils of this district, which may in time become one of the great sugar-producing areas. A large number of Luzon soils have, however, been analysed by Cox and Arguelles.[25] They are described as being clays or clay loams, and, from their analysis, should be of great potential fertility. As an average the lime exceeds 1 per cent., the phosphoric acid and potash approximate to 0·3 per cent., the nitrogen averaging over 0·1 per cent. Conditions very similar to those obtaining in Java would be expected here.

Queensland Soils.—The sugar cane soils of Queensland have been subjected to survey by Maxwell.[26] He divides the soils of Queensland into three districts, the Southern or Bundaberg, the Central or Mackay, and the Northern or Cairns.

Dr. Maxwell subdivides the soils of the southern district into four classes: the red soils, derived from true basaltic lavas; the mixed dark and light red and yellow-red soils, derived partly from basaltic lavas and partly from eruptive action upon other rock formations; soils more rather than less of sedimentary origin; and soils derived exclusively from older rock formations.

The Mackay soils are of an acidic type formed from the decay of mixed siliceous rocks, and are in sharp distinction to those of the Bundaberg district.

The average analysis of the soils from the Mackay and Cairns district is thus found by Maxwell :—

	Lime. per cent. Total.	Potash. per cent. Total.	Phosphoric Acid. per cent. Total.	Nitrogen. per cent. Total.	Lime. per cent. Available.	Potash. per cent. Available.	Phosphoric Acid. per cent. Available.
Cairns ..	0·292	0·310	0·141	0·122	0·0654	0·0132	0·0010
Mackay	0·829	0·223	0·165	0·122	0·1119	0·0222	0·0020

REFERENCES IN CHAPTER V.

1. A Treatise on Rocks, Rock Weathering and Soils.
2. H.S.P.A. Ex. Sta., Agric. Series, Bull. 45.
3. Principles and Practice of Agricultural Analysis.
4. Soils, New York, 1906.
5. *Jour. Chem. Soc.*, 1894, 65, 115.
6. Ensayo sobre el Cultivo de la Caña de Azucar.
7. La Canne à Sucre.
8. Culture de la Canne à Sucre à Guadeloupe.
9. Hawaiian Agricultural Ex. Sta., Bull. 40.
10. *Int. Sug. Jour.*, 1905, 7, 572.
11. Porto Rico Ex. Sta., Bull. 11
12. *Revista de Agricola y Industria de Tucuman*, 1912, 3, 306.
13. Report of the Government Laboratory, British Guiana, 1908.
14. *Agricultural Ledger* (Agricultural Series), 1898, 53.
15. Estacion Central Agronomica, Cuba, Boletin 2.
16. Estacion Central Agronomica, Cuba, Boletin 28.
17. *Bull. Assoc. Chim. Suc.*, 24, 1691.
18. *Jour. of the Khedivial Agric. Soc.*, 1898.
19. Lavas and Soils of the Hawaiian Islands.
20. Soils, New York, 1906.
21. Soils, New York, 1906.
22. *Java Arch.*, 1912, 20, 1251.
23. Stubbs' "Sugar Cane."
24. On the Sugar Industry of Peru.
25. *Philippine Journal of Science*, Section A,, 1914, 1; 1.
26. Report, Bureau of Experiment Stations, Queensland, 1904-5.

CHAPTER VI

THE MANURING OF THE CANE

THE early growers of the cane in the tropics carried with them the principles of farm practice developed by years of experience in the older countries, and the use of bagasse, bagasse ashes, factory refuse and stable manure was practised from very early times.

Very soon after the use of artificial manures became general in Europe, attention was directed to their use in cane culture. The earliest reference to their use comes from British India and is due to T. F. Henley[1]; this is followed by a communication of Bojer[2] dealing with practice in Mauritius.

The earliest detailed experiments are those made in 1857-59 by Krajenbrink[3] in Java, followed by others in Guadeloupe by de Jaubrun[4] made at the instance of the eminent French agronomist, Georges Ville. A third early series was those made in Louisiana by Thompson and Caje and reported by Goessmann.[5] Since these early experiments a very great mass of experimental data has accumulated, due to the work that has been carried on in nearly all districts that grow the cane as a staple product. The results of some of these experiments are collated below.

British Guiana.—Scard,[6] as the result of an extended series of experiments on the Colonial Company's estates in British Guiana, concluded :—

> "1. That lime used by itself gave a small pecuniary gain.
>
> 2. That lime associated with manures gives an increase sufficient to pay for itself only when used with larger (2 cwt.) quantities of soluble nitrogen, such as sulphate of ammonia.
>
> 3. That of nitrogenous manures, sulphate of ammonia at the rate of 2 cwt. per acre gives the best results.
>
> 4. That ground mineral phosphate appears to give an increased yield compared with superphosphate.
>
> 5. That guanos, especially in conjunction with lime, fall far short of ammonia in beneficial effect.
>
> 6. That an increase of phosphoric acid over the minimum employed (168 lbs. per acre) fails to give satisfactory pecuniary results.
>
> 7. That neither lime nor manures produce any perceptible difference in the purity of the juice but only affect the weight of cane."

Harrison[7] concluded as a résumé of work on cane manuring :—

> "1. That the weight of cane is governed by the amount of readily available nitrogen either naturally present or added as manure.
>
> 2. When applied in quantities containing not more than 40 to 50 lbs. nitrogen per acre, sulphate of ammonia and nitrate of soda are equally effective manures on the majority of soils, but that when the unit of nitrogen is of equal money value it is more economical to supply the former. Dried blood and similar organic manures in which the nitrogen only slowly becomes available are distinctly inferior sources.
>
> 3. Under ordinary conditions of soil and climate and the usual range of prices for sugar, it is not advisable to supply more than 2 cwt. of sulphate of ammonia or 2¾ cwt. of nitrate of soda per acre.

> 4. If circumstances arise in which it is desirable to obtain the maximum yield per acre by the application of more than 50 lbs. nitrogen per acre, sulphate of ammonia should always be used.
>
> 5. Practically on all soils manurings with nitrogen require to be supplemented by phosphoric acid. The most effective form appears to be superphosphate of lime and slag phosphate meal. Mineral phosphates are of distinctly lower value and are not effective unless applied in quantities far exceeding in value those required for either superphosphate or slag phosphate meal; as a rule phosphates should only be applied to plant cane, their action on ratoons being limited.
>
> 6. On some soils the application of potash salts in quantities from 60 to 160 lbs. sulphate of potash per acre results in greatly increasing the effectiveness of nitrogenous manuring. Soils containing less than 0·01 per cent. potash soluble in 1 per cent. citric acid will as a rule respond favourably to this treatment, while those containing between 0·01 per cent. and 0·02 per cent. may or may not be favourably affected."

Harrison[8] has also given a résumé of the results obtained from twenty-four years' experimental work in British Guiana. A short abstract of these results is given below:

Lime.—Alternate beds of heavy clay land were treated with five tons of slaked Barbados lime per acre. The canes were grown up to third ratoons and then fallowed for a year. In the plots which were manured in addition to liming, the total increase due to liming was 37·0 tons of cane per acre, and in the unmanured plots at the rate of 33·7 tons per acre. Both the above increases refer to the sum total of ten crops harvested in 13 years.

Phosphates.—Applications of phosphates have not always resulted in financial benefit. It appears that the most satisfactory mode of using phosphates is to apply 3 cwt. of superphosphate or 5 to 6 cwt. of slag phosphate to plant canes, the dressings of slag phosphate being more remunerative than those of superphosphate of equal cost. Phosphates do not benefit ratoons and Harrison thinks it doubtful if it is necessary to apply phosphates to Demerara soils as often as once in five years.

Potash.—Results obtained with both sulphate and nitrate of potash indicate that potash is not required on the heavy clay soils of British Guiana under the conditions of ordinary agricultural practice.

Nitrogen.—As the mean result of ten crops of cane in 13 years it was found that 10 lbs. of nitrogen as sulphate of ammonia, when added in proportions up to 300 lbs. per acre, gave an extra return of 1·3 tons of cane per acre, or 2⅓ cwt. of commercial sugar. With nitrate of soda up to 250 lbs. per acre, 10 lbs. of nitrogen would probably give 1·4 tons of cane, equal to 2½ cwt. of commercial sugar, but experiments indicate that it is not wise to apply more than 250 lbs. nitrate of soda at one dressing. With dried blood the indications over eight crops were that the relative value of nitrogen in this material was 73 per cent. of that in sulphate of ammonia.

With regard to the effect of manures on the soil, Harrison comes to the following conclusions, basing his results on the analytical figures obtained by the extraction of the soil in 1 per cent. aqueous citric acid with five hours' continuous shaking:—

> "1. That the growth of the sugar cane without nitrogenous manuring is accompanied by a considerable loss of the nitrogen in the soil, amounting in ten years to 18·6 per cent. on not-limed land, and to 26·7 per cent. on limed land. These are equivalent to losses from the soil to a depth of eight inches of 880 lbs. and 1250 lbs., respectively, per acre.
>
> 2. Repeated heavy dressings with farm-yard manure have resulted in an increase in the total nitrogen of the soil. In ten years the increase was 20·3 per

UBA.

cent., equal to 960 lbs. of nitrogen per acre added to the soil to a depth of eight inches.

3. The growth of the sugar cane on plots receiving only nitrogenous manures has resulted in losses of soil nitrogen: where sulphate of ammonia was applied, the loss amounted to 14·7 per cent., or to 670 lbs. of nitrogen, and, where nitrate of soda was used, to 16·3 per cent., or to 775 lbs. of nitrogen per acre, in the soil to a depth of eight inches.

4. On soils manured with phosphates, potash, and nitrogen in the form of sulphate of ammonia, the loss of soil nitrogen in the top eight inches amounted to 14·7 per cent., or to 700 lbs. per acre, while where nitrate of soda was the source of nitrogen the loss was far higher, amounting to 26·5 per cent., or to 1250 lbs. per acre.

5. The soil in 1891, at the commencement of the experiments, yielded 0·0142 per cent. of phosphoric anhydride to a 1 per cent. aqueous solution of citric acid. After ten years' cropping without manure it yielded 0·0086, which shows a loss of nearly 40 per cent. of the probably available phosphoric anhydride, or of, in round figures, 170 lbs. per acre.

6. Where the soil received manures not containing phosphates, the proportion of probably available phosphoric anhydride was reduced to 0·0096 per cent., equal to a loss of 32·4 per cent., or to one of, in round figures, 140 lbs. per acre.

7. Where superphosphates were used in addition to nitrogenous manures, the proportion of probably available phosphoric anhydride was reduced to 0·132 per cent., indicating a loss of 7 per cent., or of 30 lbs. per acre.

8. Where slag-phosphates had been applied, the probably available phosphoric anhydride has been reduced to 0·0102 per cent., equal to a loss of 28·1 per cent., or to one of 120 lbs. per acre. It is worthy of note that in our more recent experiments, while manuring with slag-phosphates produced on the plots, which had received superphosphates during the earlier years of the experiments, mean increases of only 2-3 per cent., they produced on those which had been manured with slag-phosphates a mean increase of 5-8 per cent.

9. The determinations of potash soluble in 1 per cent. citric acid and in 200th normal hydrochloric acid showed that cultural operations have made probably available more potash each year than is required for the growth of the sugar cane, the original samples yielding potash at the rate of 262 lbs. and 278 lbs. per acre to a depth of eight inches, those not manured with potash salts during ten years at the rates of 376 lbs. and 500 lbs., and those which received potash salts in addition to nitrogenous manures at the rates of 357 lbs. and 530 lbs.

10. Judging from the solubility of the lime in the soil in 200th normal hydrochloric acid, cultural operations set free in a soluble form more lime than the crops utilized, the original soil yielding lime to the solvent at the rate of, in round figures, 3400 lbs. per acre to a depth of eight inches, while the samples taken after ten years' cultivation yielded at the rate of 3800 lbs. The soils which received in July, 1891, slaked lime, supplying in round figures 6700 lbs. lime per acre, yielded to the acid in 1902 a mean of 5000 lbs. per acre, thus indicating after ten years' cultural operations a retention in the uppermost layer of the soil of only 1200 lbs. of added lime in a readily soluble form.

11. The action of the lime on the solubility of the potash in the uppermost layer of the soil appeared well marked, the samples from the not-limed land yielding to 200th normal hydrochloric acid at a mean rate of 460 lbs. potash per acre to a depth of eight inches, while those from the limed land yielded at the mean rate of 640 lbs."

Finally, as a result of these analyses and experiments, Harrison lays down certain precise and formal propositions of the greatest value to the agricultural chemist responsible for the economic manuring of large areas of sugar cane. These may be summarized as under:—

1. Soils which yield 0·007 per cent. phosphoric anhydride to 1 per cent. aqueous citric acid with five hours' continuous shaking will not as a rule respond to manurings with phosphates.

2. Under similar conditions soils yielding 0·005 per cent. to 0·007 per cent. will benefit as a rule by phosphatic manurings.

3. It is advisable to apply heavy dressings of slag phosphates or lighter ones of super or basic phosphates to soils yielding less than 0·005 phosphoric anhydride.

4. Soils yielding 0·008 per cent. potash can be regarded as containing under the usual system of cultivation sufficient available potash for the needs of the sugar cane.

5. If the potash lies between 0·005 per cent. and 0·008 per cent. it is doubtful if the application of potash salts will result in remunerative returns.

6. Where the potash falls below 0·005 per cent. it is advisable to add potash salts in the manures.

7. The demand of the sugar cane for lime as a plant food is low, and if a soil gives up more than 0·006 per cent. to the 1 per cent. citric acid solution, it probably will yield sufficient for plant food for ordinary crops of sugar cane.

Barbados.—Harrison and Bovell[9] in a series of experiments, carried out between 1885 and 1889 at Dodd's Reformatory in Barbados, came to the general conclusions detailed below :—

> " 1. The addition of readily available nitrogen to mineral manures produces a large increase in the weights of cane grown, but excessive dressing (over 3 cwts. sulphate of ammonia per acre) may cause a marked decrease in the richness and purity of the juice.
>
> 2. Under certain climatic conditions, manuring with nitrogen in form of slowly decomposing organic matter may, if applied before or soon after the planting of the canes, produce excellent results. Applications of such slow-acting manures in June or July at the period of the sugar cane's most active growth are inadvisable, and may result in considerable loss.
>
> 3. Upon the soil, and under the climatic conditions existing at Dodds' during the years 1885 to 1889, both inclusive, nitrate of soda was markedly inferior to sulphate of ammonia as a source of nitrogen for sugar cane.
>
> 4. The profitable employment of purely nitrogenous manures depends largely upon the state of the soil. If the soil is in good heart, such applications may realize heavy returns ; if poor such manurings will result in heavy loss.
>
> 5. For the maximum return of sugar cane by manuring, phosphates must be present in the manures used.
>
> 6. If such phosphates are applied in the form of superphosphate of lime, great care must be exercised in their use and application, as, whilst light dressings of superphosphate capable of supplying 75 lbs. or 80 lbs. per acre of 'soluble phosphate' (equivalent to from 16 to 18 per cent. of 'soluble phosphates' in commercial sugar cane manures when applied at the rate of one ton to five acres) may produce large increases in the weights of canes, &c., heavier dressings do not produce corresponding increases, and excessive ones may even reduce the produce below that obtained when manuring with nitrogen and potash only.
>
> 7. The use of insoluble phosphates such as precipitated and mineral phosphates is not advisable during the period of the cane's active growth, but may produce excellent results when applied to the soil at an early period, in a very fine state of subdivision in large quantities, and uniformly mixed with it. To obtain, however, equally profitable results with these phosphates, as with moderate applications of superphosphates, it is absolutely necessary that they be purchasable at far lower prices than they can be at present obtained in Barbados.
>
> 8. The addition of potash to manurings of phosphates and nitrogen produces in all soils at all deficient in available potash large increases in the yield of cane and of available sugar in the juice per acre.
>
> 9. The most advantageous time for the application of potash-containing manures appears to be at the earliest stages of the plant's growth, and pecuniarily the use at this period of so-called early cane or potassic manures is far preferable to that of even the highest quality of manures which were formerly used.
>
> 10. The presence of an excess of potash in the manures does not injuriously affect the purity of the juice, by increasing either the glucose or appreciably the amount of potash salts contained in it.
>
> 11. No definite information has been obtained with regard to the influence of the mineral constituents of the sugar cane manures upon the saccharine richness of the canes ; although, in the great majority of cases, canes receiving potassic manures have been somewhat richer in sugar than those otherwise manured. It appears, therefore, probable that increased saccharine richness must be sought in the cultivation of varieties, the careful selection of tops for planting from healthy and vigorous canes (by this selection, whilst the saccharine strength of best canes of a variety would not be increased, the average might be greatly raised), and possibly by the seminal reproduction of carefully selected canes and varieties."

Hawaii.—The results of a series of experiments led C. F. Eckart[10] to the following conclusions:—

> "1. Lands, capable of producing eleven tons of sugar to the acre without fertilization, may be fertilized with profit, climatic conditions and water supply being favourable.
>
> 2. While soils of high fertility may respond to mixed fertilizers, the percentage of gain is greater as the soils suffer a gradual exhaustion.
>
> 3. The Rose Bamboo and Lahaina varieties of cane did not show the same response to various combinations of fertilizer ingredients.
>
> 4. It is indicated that Rose Bamboo requires a larger store of phosphoric acid to draw from than Lahaina for the best results.
>
> 5. Lahaina cane responded more to an increased supply of potash in the soil than Rose Bamboo.
>
> 6. Both Rose Bamboo and Lahaina canes showed a considerable gain in yields from fertilization with nitrogen. The percentage of this element in the soil on which the tests were carried out was below the average for the islands.
>
> 7. On a soil containing phosphoric acid (soluble in a 1 per cent. solution of aspartic acid) in quantities which were in large excess of those contained in the average soil, phosphoric acid applied with nitrogen gave yields of Rose Bamboo cane exceeding those obtained when nitrogen was applied alone. Under the same conditions, Lahaina cane gave about the same yields following fertilization with nitrogen as when nitrogen was applied with phosphoric acid.
>
> 8. On a soil containing potash (soluble in a 1 per cent. solution of aspartic acid) in quantities comparing closely with those of the average island soil, Rose Bamboo and Lahaina cane gave increased yields when this element was applied with nitrogen.
>
> 9. The separate application of phosphoric acid in soluble forms to lands standing high in phosphoric acid may result in a loss of sugar rather than in a gain. It is indicated that the chances of loss are greater with Lahaina cane than with the Rose Bamboo variety in localities where the two varieties make an equally thrifty growth under normal conditions.
>
> 10. Separate applications of potash in the form of sulphate of potash may decrease the yields of cane. The danger of loss is apparently greater with Lahaina cane than with Rose Bamboo. This refers to applications of potassium sulphate to lands under cane.
>
> 11. The fact that the application of one particular element gives negative results with respect to fertilization does not warrant the assumption that the element in question may, with profit, be omitted as a component part of mixed fertilizers. Applied with another element, the gains may be considerably greater than could be obtained with the latter element alone.
>
> 12. With both varieties the purest and richest juice was obtained from the cane on the unfertilized area. In general, the plats receiving incomplete fertilizers yielded juices of greater purity than those plats to which the three elements were applied together."

Later experiments have resulted in the same authority[11] stating:—

> "1. The profit resulting from the application of fertilizers or manures will depend largely upon other factors than the chemical composition of the soil. Providing certain plant-food deficiencies represent the chief depressive influence on crop yields, the response to appropriate fertilization will be commensurate with the difference between the limitations exerted upon crop production through lack of available plant nutrients and the limitations exercised by the next restraining factor in order of importance after the material has been applied. This latter factor may be physical, biological, or climatic in character.
>
> 2. The relative effects of different combinations of fertilizer materials on the growth of sugar cane when these materials are added to a given soil will be determined chiefly by
>
> (*a*) the extent to which their several ingredients directly or indirectly lessen the deficiencies of available plant nutrients;
>
> (*b*) the extent to which they cause the bacterial flora to approach an optimum balance for the regular production of sufficient nitrates or assimilable nitrogen compounds, and
>
> (*c*) the degree and manner in which they produce physical changes in the soil.
>
> 3. Owing to the fact that a definite relationship exists between the efficiency of a fertilizer mixture and the quantities and proportions in which its ingredients

are associated, due to biological, chemical, and physical effects which its component parts have in a given soil, variations in the composition of the mixture beyond certain limits may materially influence crop yields.

4. A more definite knowledge concerning the amounts and proportions of fertilizer salts to use in a mixture for best results would on some soils yield pronounced profits, while a lack of such knowledge may in some cases result in a loss, especially when soluble salts are employed.

5. The greatest loss from the use of improper mixtures of fertilizers is apt to occur on acid soils, and in such cases considerable risk is involved from the continued application of mixtures containing ammonium sulphate, sulphate of potash, and acid phosphate, when lime dressings are not previously made.

6. While the chemical and physical analysis of a soil will usually prove of value in indicating the best cultural methods to follow in maintaining or improving its fertility, and may also indicate in a general way certain of the plant-food deficiencies in given cases, it cannot afford definite information as to the amounts or proportions of ingredients in fertilizer mixtures which will give maximum returns.

7. It is possible that the data from more extended field experiments with a large variety of soils, when reviewed in connection with the comparative analysis of the soils, using both weak and strong acids as solvents, may indicate a somewhat definite relationship between the analytical figures and the order of importance which phosphoric acid and potash should assume in cane fertilizers in given cases.

8. It would appear that analysis of soils, with more special reference to their physical qualities, reaction and content of organic matter, nitrogen, and more readily soluble lime, may, with due consideration of the water supply and climatic conditions, be relied upon to indicate such manurial treatment as will result in a profit, although they will not afford definite information as to the weights and proportions of ingredients in fertilizer mixtures which will result in maximum efficiency.

9. Nitrogen is the most important element to be considered in the fertilization of the sugar cane in the Hawaiian Islands, and when applied in mixed fertilizers some risk of reduced efficiency is entailed if either the potash or phosphoric acid (in the form of soluble salts) is made to exceed the weight of this element.

10. Unless, through past local experience or carefully conducted field tests, it has been definitely determined that a modified formula may be expected to give greater yields, it is safer, when applying nitrogen, potash and phosphoric acid in the form of soluble salts, to have the mixed fertilizer contain even quantities of these elements, which are not to exceed 60 lbs. per acre in the case of each element.

11. Field tests with fertilizers whose ingredients are mixed in varying proportions will, if such experiments are accurately and scientifically conducted through a sufficient period, give the most reliable information as to the best manurial practice. Such experiments should be laid out in very long, narrow, parallel and contiguous plats or strips, with the untreated check areas lying immediately adjacent to the fertilized cane.

12. The great importance of 'resting' fields in rotation on Hawaiian plantations, and growing upon them leguminous crops is very clearly indicated. This applies more particularly to the irrigated plantations, where the supplies of organic matter are in the majority of cases becoming greatly reduced through successive tillage operations in a comparatively arid climate, and by the favourable conditions created for bacterial activity through regular irrigations under uniformly high temperatures."

More recent experiments summarized by Larsen[12] have given rather different results. In some the application of readily available nitrogen alone gave as great a crop as when potash and phosphates were also used. In others the greatest benefit followed from the application of a complete manure. Variation in the soils themselves and the residual effect of previous heavy applications of complete mixtures are possible disturbing factors. In some of the later experiments there, the maximum money benefit from readily available nitrogen was not reached until as much as 300 lbs. nitrogen per acre had been applied.

Java.[13]—The very numerous experiments made in Java have nearly all led to the conclusion that readily available nitrogen is the only manure required to give the maximum return. Certain soils are, however, benefited by phosphates. The lack of response to mineral manures is attributed to the beneficial effect of the very large quantity of silt annually brought down in the water used on the rice crop, which precedes that of the cane.

The Practice of Cane Manuring in Different Countries.—In Java and also in Demerara sulphate of ammonia is often the only material used. The average quantity employed in Java[13] is 350 lbs. per acre, with variations from 250 lbs. to 450 lbs. In Demerara the quantity used is rather less, and seldom reaches 300 lbs. per acre. A number of years ago oil-seed cake manure was used to a great extent in Java, but its use has been given up almost entirely in favour of the more readily available form.

In Demerara it is also frequently the custom to apply up to 10 cwt. of basic slag phosphate to the plant canes, especially if analysis by Dyer's citric acid method shows a deficiency in this element. On the heavy clay soils it is exceptional to find a deficiency of potash, notwithstanding the heavy drain made on this element by the continuous crop of cane.

In Hawaii, where the largest yield of cane is obtained. relatively enormous quantities of manure are employed; nitrate of soda is employed largely on the irrigated plantations in the districts of little rainfall, and this material, as well as sulphate of ammonia much less frequently, is used in the spring of the second growing season; the application reaches up to 400 lbs. per acre.

In the Hawaiian Islands the climatic conditions are such that it is possible to obtain a period of growth from planting to harvest up to 24 months; hence there are two growing seasons and the application of manures before each has been found to be very beneficial. The practice is generally to use mixed fertilizer in the first growing season and nitrate in the second.

In that district also a cold spell is annually encountered, when a check to and *yellowing off* of the cane occurs; this is probably due to a cessation of the activities of the nitrifying organisms in the soil. It has been found by experience that the application of nitrates at this time has a very beneficial effect on the growth of the cane.

In addition, a complete fertilizer containing on an average 7 per cent. to 10 per cent. each of nitrogen, phosphoric acid and potash is applied; the proportions of these ingredients are altered to correspond with the analysis of the soil. Up to 1,000 lbs. per acre of such a fertilizer may be applied, although 600 lbs. is a more usual dressing. Basic slags are but little, if at all, used.

In Mauritius and Bourbon large quantities of pen manure were (previous to the extended use of mechanical traction) employed, and the plant canes seldom received any other fertilizer. For ratoon crops a complete mixture, similar to that quoted above as used in Hawaii, is employed, but in a much smaller quantity.

In Louisiana, chiefly owing to its local production, cotton-seed meal forms the chief source of nitrogen, and superphosphate forms the source of phosphoric acid. Owing to the abundance of potash in the soil this element is seldom necessary, and its action in retarding maturity is a reason against its use in such a climate.

In Egypt nitrate of soda is the chief source of readily available nitrogen, applications being made to the young cane after an irrigation. The Nile water used in irrigation brings into the soil a certain quantity of plant food, and the rotations followed also reduce the necessity for such heavy dressings of manure as are used elsewhere. A peculiar manure and of small value, collected from the refuse of old villages and known as "ruins manure," is also used by the fellaheen planters, as well as dove dung, to which a quite fictitious value is attached.

In Barbados and other islands of the British West Indies pen manure forms an important source of plant food.

The methods of application differ very considerably. In countries such as Java, Demerara, Mauritius, where there is a cheap supply of labour, the sulphate of ammonia used is placed by hand directly at the foot of the cane stool. A hole may be made in the ground with a crowbar, into which the calculated quantity of manure is placed with a spoon or other measure. Alternatively a ring may be scratched round the stool over which the material is scattered. In Java exactitude in application has been sometimes carried to the extent of supplying the sulphate of ammonia in the form of tablets of from 7 to 10 grams weight. In countries where labour is more expensive the manures are usually broadcasted on the land and incorporated with the soil in the operations of ploughing. The applications may also take place in the furrows as they are opened out to receive the tops as they are planted, or the manure may be placed near the cane row after small ploughs have been used in cultivation. In the Hawaiian Islands it is not unusual to apply nitrate of soda dissolved in the irrigation water.

The relatively very great quantity of manure used in the Hawaiian Islands calls for comment. Carefully conducted experiments confirmed by plantation experience have there shown that the limit at which the return from manures ceases to become remunerative is much higher than elsewhere. This is all the more remarkable considering the high fertility indicated by analysis and confirmed by the great productivity found in practice on unmanured land. Actually the response to heavy dressings of manure has been found to be the greatest on the richest and most fertile soils. This condition can be readily understood in the light of the law of minimum (*cf* Chapter V) by realising that on certain soils there are no limiting factors present; certain of the Hawaiian soils in conjunction with ample irrigation and good tilth very nearly approach this condition. In other countries where such large applications of manure do not give a proportionate increase in the crop, some limiting factor, as for instance lack of rain, may be present. It is also to be remembered that the sugar produced by intensive manuring in Hawaii enjoys protection in the U.S. market, so that pound for pound the sugar produced is more valuable than that grown in unprotected districts.

Time of Application of Manures.—The experimental studies of the manuring of the cane have in all cases pointed to the benefit to be obtained from an early application of readily available nitrogen and as a matter of observation it has been found that such canes make a rapid, vigorous growth and are less affected by a drought which may occur after the canes are established. Geerligs explains the specific action of nitrogen as first of all causing the sap to rise in the stem; the leaves at this stage of growth are unable to elaborate the sap, and consequently a development of the underground buds of the rhizome is forced. This process is known as tillering or suckering, and results in a larger number of stalks to a stool. The influence of nitrogen is, however, more than this. The root system of the cane develops, and thus gives the cane more opportunity to make use of the soil and of the limited supply of soil water during a period of drought. In general plant physiological experience readily available nitrogen leads to large leaf development, and with the cane this feature should be of importance when the intimate connection between the leaves and stem is considered.

It is often asked if one or two applications of the same amount of nitrogen are the more beneficial. Watts' experiments in the Leeward Islands[14] point to the one-application system being the better, and he reasons on the following lines :—

> " These results lead us to make the suggestion that manures applied to sugar canes will probably be found to be more efficient, both physiologically and pecuniarily, if given in quick-acting forms at a very early stage of the cane's growth, and we are led to speculate if this may not be accounted for, on botanical grounds, by the structure and manner of growth of the cane. We have perhaps been too prone, when thinking of manuring crops, to have in our mind dicotyledenous-branching trees, with many growing points, instead of the sugar cane, with its one growing point, or ' top ' to each stem. The cane having lost its habit of seeding may be regarded as a growing top and a stem. When the former has arrived at its full development it may be taken roughly to be a fixed quantity ; old leaves fall away and are replaced by new ones, so that the top remains fairly constant. The stem constantly receives additions, and gradually ripens to form a dormant sugar house chiefly filled with sugar, doubtless originally destined to provide for the growth of flowers and the production of the seed, but now developed to a greater extent than the feebly fertile flowers demand.
>
> The elements of plant food, including nitrogen, potash and phosphate, are found in greater abundance in the ' top ' and leaves than in the stem ; hence it is reasonable to suppose that in the early development of the cane plant, with its system of top and stem, greater demand is made upon the plant food supply of the soil in order to build up this top rich in plant food than occurs later on when the top, a comparatively fixed quantity, has been developed, and additions are being made to the stem, which additions demand relatively large amounts of carbohydrates, with comparatively small amounts of nitrogen, potash and phosphates. Transference of plant material from point to point takes place freely, and it is reasonable to suppose that the cells of the stem, as they pass into the dormant condition, may pass on some of their nitrogen, potash and phosphate to be used in building up newer structures. We are aware of this transference of plant food in the case of the leaves, where the faded and falling cane leaves contain much less plant food than the actively growing ones.
>
> In order to have fresh information on this point analyses have been made of fresh cane leaves, and of dry cane leaves just as they were about to fall from the plant but not actually fallen.
>
> The results are as follows, and show in a striking manner the nature of the transference of plant food material from the leaf back to the stem as it ripens and as its lower portion becomes dormant :

ANALYSIS OF ASH.

	Green Leaves.	Trash Leaves.
Silica	46·26	63·31
Carbon	3·52	3·47
Iron oxide	0·49	0·38
Alumina	—	0·03
Lime	4·68	6·67
Magnesia	5·08	5·10
Potash	17·23	6·49
Soda	6·60	3·58
Phosphoric anhydride	1·39	0·93
Sulphuric anhydride	5·45	5·18
Carbon dioxide	2·39	1·97
Chlorine	9·09	1·83
Water	1·25	2·59
	103·43	101·53
Deduct Oxygen equal to Chlorine	2·02	0·40
	101·41	101·13
Nitrogen	0·777 on dried leaves.	0·36 on dried trash.

> GRAMS OF MINERAL MATTER IN ONE LEAF.
>
> One fresh cane leaf contains 0·9688 gram of ash.
> One fresh trash leaf contains 0·5304 gram of ash.

	Green Leaf.	Trash Leaf.
Silica	0·4419	0·3321
Carbon	0·0336	0·0182
Iron oxide	0·0047	0·0020
Alumina	—	0·0002
Lime	0·0448	0·0350
Potash	0·1645	0·0340
Soda	0·0630	0·0188
Phosphoric anhydride	0·0134	0·0048
Sulphuric anhydride	0·0520	0·0272
Carbon dioxide	0·0228	0·0103
Chlorine	0·0868	0·0096
Water	0·0118	0·0136
Deduct oxygen equal to chlorine	0·0193	0·0021
	0·9586	0·5304
Nitrogen	0·094	0·033

> If this manner of regarding the cane as a growing organism is correct, it may lead us to modify some of our ideas concerning the manuring of sugar canes, and may account for the better result obtained by applying considerable quantities of nitrogen in one dose at an early stage, and for the smaller results obtained from the use of such a slow-acting manure as dried blood."

Very early experiments dealing with this point were made as long ago as 1877 by Rouf[15] in Martinique. He harvested, weighed and analysed a crop of cane month by month. His results transposed into pounds per acre are given below, together with the conclusions drawn :—

1. The absorption of minerals commences as soon as the development of the plant allows, but evidently it is much more active if the plant finds the necessary fertilizing principles at its disposal, and above all if the climatic conditions are favourable.

2. The progress is moderated from the sixth to the ninth month ; then the march of the elements rises to the tenth and eleventh month, the time of the maximum absorption. At this period the total weight of stalks and leaves is a maximum ; the cane has absorbed all the minerals and nitrogen, and the weight of dry matter also is the maximum. By the tenth month the cane has absorbed a maximum of the following elements : phosphoric and sulphuric acids, potash, soda and silica. At the eleventh month the elements which lagged behind are absorbed up to the maximum ; these are lime, magnesia and nitrogen, and the elements which first reached a maximum have begun to be eliminated. In the twelfth month, the elimination of the last three elements begins and continues for all until the cane is ripe.

3. The cane should be manured early so as to place at its disposal necessary food, and to accelerate the elaboration of sugar.

4. The elimination of the excess of potash, chlorides and soda from the stalk and their transport to the top and leaves are ended when the cane is ripe. In the top of the cane are accumulated alkaline chlorides, glucose, albuminoid and pectic bodies.

The return of plant food to the soil by the plant as it ripens indicates the agricultural economy of harvesting the crop at its period of maximum ripeness as less plant food is then removed. Rouf's analyses bring out this point very clearly.

MONTHLY COMPOSITION OF THE CANE (WHOLE PLANT).
After ROUF.

Lbs. per Acre.

Age of Cane.	Green Weight.	Dry Weight.	Ash.	Nitrogen.	Phosphoric Acid.
Six months	21,054	4,072	275	20·2	10·3
Seven months	44,608	7,366	360	35·5	15·2
Eight months	73,302	10,597	444	38·0	27·3
Nine months	76,082	12,100	504	44·9	27·7
Ten months	82,008	16,290	628	55·2	39·2
Eleven months	76,558	18,363	576	60·4	37·3
Twelve months	65,377	16,505	467	55·2	36·7
Thirteen months	79,150	17,756	468	39·8	29·0

Age of Cane.	Sulphuric Acid.	Potash.	Soda.	Lime.	Magnesia.	Silica.
Six months	14·1	36·0	2·2	7·1	13·1	139·1
Seven months	14·8	44·4	8·6	23·8	15·5	168·1
Eight months	18·7	79·0	7·9	26·1	24·6	200·5
Nine months	20·0	79·7	9·7	28·4	25·7	245·3
Ten months	21·9	97·3	21·4	46·7	26·2	322·0
Eleven months	19·4	71·5	13·6	58·4	36·7	293·3
Twelve months	14·3	62·0	8·8	33·0	25·9	232·4
Thirteen months	17·3	62·6	7·0	38·0	27·5	210·5

A number of experiments have been made with the view to determining the effect of dividing the applications of manure. In these experiments the manure has been applied at an early stage of the cane's growth and generally within three months of planting. Nearly all these experiments show very little difference in the effect, and as typical of them the following, due to Ledeboer[16] in Java, are quoted :—

Lbs., sulphate of ammonia per acre.	Cane, Tons per acre.	Yield per cent. on cane.
0-308-154-0-0	57·8	11·54
0-154-308-0-0	56·7	11·58
0-78-231-154-0	56·0	11·64
39-116-154-154-0	59·0	11·57
39-39-154-116-116	58·2	11·48

Somewhat different conditions obtain in the Hawaiian Islands, where the cane is allowed in many cases a two years' growth. There it has been found that considerable benefit arises from applications of nitrate of soda immediately before the second growing season.

The Choice of Nitrogenous Manures.—Nitrogen can be applied to the soil as nitrates, as ammonia salts, as organic compounds and in the form of cyanamide. For the special purposes for which readily available nitrogen is used in cane cultivation choice is confined to nitrate of soda and to sulphate of ammonia. Nitrate of lime and cyanamide are not available in sufficient quantity, and the organic forms of nitrogen, such as oil-seed cakes and dried blood, have been found to have a much lower efficiency in regard to the cane than have the two first-mentioned materials. On general principles sulphate of ammonia is indicated as applicable to soils containing a good proportion of calcium carbonate, as in such soils nitrification proceeds rapidly. This argument, however, loses much force, as it has been shown in recent years by a long series of experiments, initiated by Pitsch in 1887, and completed by Miller and Hutchinson in 1909, that plants can utilize ammonia salts without their conversion into nitrates. On the other hand, when there is a very large quantity of calcium carbonate in the soil there is danger of loss of ammonia by volatilization. Another objection which is often raised against the use of ammonia salts is that their long-continued use may result in an acid reaction and consequent infertility in the soil. This action has been specially observed at the Woburn Experiment Station on light sandy soils, and has also been studied at several Experiment Stations in the United States. In Java and in Demerara, many years' use has not resulted in this condition being observed, and Harrison[17] inclines to the belief that the Demerara soils have benefited thereby, an action he attributes to the alkaline nature of the subsoil water. In both these districts the results of experiments indicate the superiority of ammonia over nitrate, and a further reason for this may be found in the deflocculating action of nitrate of soda on the clay soils common to both localities.

The use of nitrate is most extensive in the Hawaiian Islands, and it is also used to a considerable extent in Egypt and in Mauritius. The soil type of the Hawaiian Islands is radically distinct from that of either Java or Demerara, and the deflocculating action on clays would be largely absent. Recently, however, some evidence has arisen that the long-continued use of nitrate there has resulted in the formation of "black alkali" in certain soils, and to this cause is attributed the falling off in productivity of the Lahaina cane on certain plantations. An objection to the use of nitrate of soda in the tropics lies in its extremely deliquescent nature, an objection that loses much weight when the locality where it is used is an arid one, as is the case in many parts of the Hawaiian Islands. Where there is reason to suppose that either form is objectionable when long continued, a natural suggestion would be to use the two forms mixed or separately in alternate years.

The use of oil-seed cake is almost entirely confined to those districts where it is produced, such as Louisiana, where large quantities of cotton seed cake are employed in cane culture.

Choice of Phosphatic Manures.—All phosphates when applied to soils are fixed, and rendered insoluble; the *rationale* of the use of a soluble superphosphate, as opposed to the use of an insoluble phosphate, is that the solution of phosphoric acid is precipitated within the soil in a much finer state of division than can be obtained by grinding an insoluble phosphate, and mechanically ploughing it into the soil. Dependent on the type of the soil, the phosphoric acid will be precipitated within the soil as phosphate of lime, or iron or alumina. The former of these bodies is available to the plant, the latter is not; hence it is an axiom in manuring that superphosphates are suitable for calcareous soils or such as contain a considerable proportion of lime carbonate. On heavy clays such as constitute the cane lands of British Guiana superphosphates are contraindicated. On such soils basic slag is the form of phosphatic manure from which benefit is to be expected. It has been shown by many experiments that on clayey and peaty soils, where an alkaline base is required to neutralize the nitric acid formed by soil organisms, this form of phosphoric acid gives the best results.

Lime in Connection with Cane Growing.—A study of the analyses of the ash of the cane cannot lead to the conclusion that the cane is a calciophile plant, and Harrison[8] in his résumé of twenty-five years' experimental study of the manurial requirements of the cane has come to the same conclusion.

The benefits that follow the application of lime in many districts where the cane forms the staple crop must not then be considered as due to specific action of this material on the cane, but as due to its general effect in amelioration of the soil.

The action of lime may be briefly summarized :—

1. Correction of acidity in the soil, whether due to an excess of organic matter or due to long-continued application of ammonia salts.
2. Amelioration of the physical condition of heavy clays.
3. Rendering potash available.

It is now generally considered better practice to apply moderate doses of lime, say 1,000 lbs. per acre, every five or six years, than to put on heavier applications less frequently. This is the general rule in the Hawaiian Islands, larger applications being only made on a few plantations possessing a distinctly sour soil with much organic matter. However, some heavy clay adobe soils have been treated there with success with as much as fifty tons of coral sand to the acre ; this procedure recalls the system of *marling* once so prevalent in English agricultural practice.

The form in which lime is applied is either as the carbonate or as quicklime. Recent practice inclines very strongly to the use of the carbonate, to the exclusion of the caustic form. In addition, the fineness of division of the lime has been shown to have a very great bearing on its efficiency. The very extensive literature on this important point has been collated by Kopeloff,[18] whose experiments point to ground limestone sifted through mesh 200 to the linear inch as being the most efficient form in which to make the application.

A point of very great interest in connection with cane growing and one which has not, so far as the writer is aware, been thoroughly investigated, is the " lime : magnesia " ratio best suited for the cane. For cereal crops generally, for rice, and for such as have a large leaf development, evidence has been brought forward by Loew[19] and his pupils that the lime should be in excess of the magnesia in proportion from 1·5 to 2 times as great. In the absence of any evidence to the contrary it may perhaps be taken that a similar ratio holds for the cane. That an excess of magnesia has a deleterious effect on the cane has been shown by Eckart,[20] who irrigated cane in tubs with both lime and magnesia chlorides, and found a much better growth when the lime was in excess of the magnesia than when the quantity of these two bodies was nearly the same.

Quite recently Loew[21] in Porto Rico has gone further into the subject in special reference to the cane ; in that island he has found the soils containing an excess of magnesia over lime. He quotes an instance of a cane soil suffering from acidity, stiffness and an excess of magnesia over lime where an application of 3,000 lbs. lime per acre increased the yield of cane 57 per cent. He also writes : " The most favourable ratio of lime to magnesia in the soil for cane will very probably be as 2 to 1, if both are present in an equal state of availability. This can be inferred from experiments with maize by Bernadini."

The hypothesis of Loew, though carefully elaborated, is not accepted by many agronomists; it has been followed up chiefly in Japan by Aso and others. The lime-magnesia ratio must apply to the soil water or to readily soluble forms in the soil; a hydrochloric acid soil extract showing an excess of magnesia over lime would not be sufficient to condemn a soil on Loew's hypothesis. It is of interest to note that in some Demerara soil waters Harrison[14] has found that with sulphate of ammonia manuring, the molecular ratio of calcium-magnesium was 1 : 0·77; with nitrate of soda manuring it was 1 : 1·52, and with no manuring 1 : 2·40, and with no cultivation 1 : 2·57.

Yields of cane had become very deficient in the second and third cases, but Harrison does not commit himself to attach any special significance to these ratios.

Effect of Manuring on the Composition of the Cane.—There is a wide-spread belief that heavy manuring adversely affects the quality of the juice of the cane, and under certain conditions this may be correct; thus in a district such as Demerara, where a short period of growth obtains, a late manuring results in an impure juice. Possibly in such a case not only is the maturity of the crop delayed, but a second growth of young cane is stimulated and the comparison may become one of mature and of immature cane. Again, with heavy manuring, there is a consequent increase in the size of the crop with less access of direct sunshine, and a delayed ripening is the result.

That judicious heavy manuring has no harmful effect is shown from the results regularly obtained in Hawaii; nowhere is a sweeter and purer juice obtained, and nowhere is the manuring more intense. Here, however, owing to climatic conditions peculiarly favourable, a great part of the harvest consists of fully matured cane cut at the period of maximum sweetness.

Actual experiments on this point lead to somewhat contradictory results. Thus Eckart[9] found in Hawaii with unmanured cane a sucrose content in the juice of 18·26 and purity of 90·69, manured canes affording a juice containing from 16·40 per cent. to 17·85 per cent. sucrose, and of purity 89·16 to 90·60 Conversely, however, the same authority has supplied data of an experiment where, in three instances, an application of 1,200 lbs. of high grade mixed fertilizer and 300 lbs. of nitrate per acre not only enormously increased the yield, but gave a sweeter and purer juice.

Of the specific effect of manures, many ideas, supported or not by experiment, may be met with. Lime is credited with producing a sweet and pure juice in the West Indian adage: "The more lime in the field the less in the factory," and this idea is reflected in the quotations in Chapter V.

Phosphates are also believed to affect beneficially the sugar content of the cane, and potash is reputed to have the reverse effect; Harrison's experiments already quoted fail however to countenance this idea.

There is a certain amount of evidence that canes heavily manured with readily available nitrogen are more susceptible to fungus attacks than are others; this may be due to the production of a soft-rinded cane due to rapid growth, and possibly in the presence of infected soil or material the nitrogenous matter may also benefit the development of the fungus. In Egypt, it may be mentioned, on lands controlled by the Daria Sanieh manuring of cane was not allowed.

On the whole, the writer thinks that the bulk of the evidence points to weight of cane only as being affected; differences which may from time to time be observed are probably due to different degrees of maturity or to other uncontrollable factors vitiating the comparison.

The Ash of a Plant in Relation to Manuring.—It has been thought that the analysis of the ash of a plant and the agricultural balance sheet would give information as to the proper combination of manures to apply; this idea demands that for any plant there is one particular ash analysis which is most suited for it. The variation, however, is so great that no " best ash " for the cane can be obtained, and this captivating hypothesis breaks down on subjection to scrutiny, or rather is not supported, as regards the cane, by sufficient evidence. It is conceivable, however, that an ash analysis showing a low proportion of, say, lime might point to a deficiency of available lime in the soil ; on the other hand, a deficiency of lime in the soil might be reflected in small crops rather than in a low percentage of lime in the ash.

Connected with this subject is the " Analysis of the Soil by means of the Ash " ; this point has been recently studied by Hall,[22] who thus summarizes his results, obtained, of course, in a temperate climate (England), but none the less generally applicable :—

> 1. The proportion of phosphoric acid and of potash in the ash of any given plant varies with the amount of these substances available in the soil, as measured by the response of the crops to phosphatic or potassic manures respectively.
>
> 2. The extent of the variation due to this cause is limited, and is often no greater than the variations due to season, or than the other variations induced by differences in the supply of non-essential ash constituents—soda, lime, &c.
>
> 3. The fluctuations in the composition of the ash are reduced to a minimum in the case of organs of plants, which, like the grain of cereals or the tubers of potatoes, are manufactured by the plant from material previously assimilated.
>
> 4. The composition of the ash of the cereals is less affected by changes in the composition of the soil than is that of root crops like swedes and mangels.
>
> 5. The composition of the ash of mangels grown without manure on a particular soil gives a valuable indication of the requirements of the soil for potash manuring. Similarly, the phosphoric acid requirements are well indicated by the composition of the ash of unmanured swedes, though in this case determination of the citric acid soluble phosphoric acid in the soil gives even more decisive information.
>
> 6. Pending the determination of phosphoric acid and potash " constants " for some test plant occurring naturally on unmanured land, the interpretation of soil conditions from analyses of plant ashes is not a practicable method by which chemical analysis of the soil can be displaced.

The effect of the soil on the composition of the ash of the cane is well shown in some observations of Burgess[23] dealing with Hawaiian soils quoted below :—

CORRELATION BETWEEN POTASH IN SOIL AND POTASH IN MOLASSES. (BURGESS).

	Puna-Hilo.	Hamakua-Hilo.	Kohala.	Kaui.
	Per cent.	Per cent.	Per cent.	Per cent.
Potash sol. in hot hydrochloric acid	0·060	0·220	0·442	0·208
Potash sol. in 1% citric acid ..	0·0111	0·0257	0·0266	0·0533
Potash in molasses	1·575	2·749	4·224	3·877
Potash in ash of molasses ..	17·8	26·4	35·1	38·3

Burgess considers that potash manuring is indicated as advisable for the soils of the Puna-Hilo district, where there is a very distinct correlation between the potash in the soil as indicated by analysis and that found in the molasses afforded by canes there grown.

The Manures Employed in Sugar Cultivation.

Artificial Manures.—This term is employed to denote manufactured products as opposed to farmyard or pen manure considered as a "natural" manure. For convenience of reference their properties and composition are briefly mentioned here.

Sulphate of Ammonia.—The pure body contains 21·21 per cent. nitrogen and as found on the market contains about 20 per cent. nitrogen.

Nitrate of Soda.—This material is extremely hygroscopic. The pure body contains 16·5 per cent. nitrogen, the commercial body containing about 4 per cent. of impurities; these impurities are in English commerce grouped together under the peculiar term of *refraction.*

Nitrate of Potash.—The pure body contains 13·8 per cent. nitrogen, and 46·5 per cent. of potash; it is but seldom used as a manure, the supply being devoted to other purposes; in an impure form it however finds its way to Mauritius from India, and being of local occurrence is used to a certain extent in Egypt.

Seed Cake Manures.—The refuse of seeds, etc., that have been crushed for oil, comes into the market in large quantities as manure. The plants that most largely contribute are cotton, flax, castor oil, coconut; their composition of course varies with the origin. In general these manures can be used only in the country of their origin, drawbacks of freight prohibiting their more extended use. Some analyses of these materials, collected from various sources, are given below:—

	Nitrogen per cent.
Ground nut (*Arachis hypogæa*)	4·06—7·94
Kapok meal (*Eriodendron anfractuosum*) ..	4·40
Castor cake (*Ricinus communis*)	4·20
Coconut meal (*Cocos nucifera*)	3·62
Cotton-seed meal (*Gossypium sp.*)	7·00
Soja cake (*Soja hispida*)	6·12

Dried blood, as it comes on the market, contains from 10 per cent. to 16 per cent. of nitrogen.

Fish scrap is of very variable composition, containing from 5 per cent. to 8 per cent. nitrogen, and from 5 per cent. to 7 per cent. phosphoric acid.

Tankage is the residue from meat packing houses, and is of variable composition; as it contains considerable quantities of bone it is also a phosphatic manure. It is similar in action and composition to fish scrap.

Guano.—The original Peruvian guano has long been exhausted, and the guanos now on the market are of recent origin. They differ much in composition from those of long accumulation. Some bat guanos contain an extraordinarily high amount of nitrogen, reaching up to 30 per cent.

Cyanamide is a synthetic compound of the formula $CaCN_2$; it is sold under the name lime nitrogen, German nitrate, or even as lime nitrate, from which it must be carefully distinguished; as it appears in commerce it contains about 20 per cent. of nitrogen.

Nitrate of lime is manufactured and put on the market as a basic nitrate of composition $Ca(OH)NO_3$. It contains about 12 per cent. of nitrogen.

Gypsum.—This material is sulphate of lime, and, in a sense, can not be regarded as a manure; it acts indirectly as a source of potash, which it sets free in soils; it is also used as a corrective of soil alkalinity.

Bone manures contain from 4 per cent. to 6 per cent. of nitrogen, and from 40 per cent. to 50 per cent. of phosphate of lime; this form of manure is sold as half-inch, quarter-inch, or as bone meal or dust, and is frequently steamed to remove the fats. The nitrogen is of little availability, and the phosphates, unless the bones are finely ground, are but slowly assimilated.

Mineral phosphates contain from 25 per cent. to 35 per cent. of phosphoric acid, and are occasionally used without previous treatment intended to render the phosphoric acid soluble.

Superphosphates usually contain about 20 per cent. soluble phosphoric acid, and in the form known to the trade as "double superphosphate" up to 40 to 50 per cent. They are prepared from mineral phosphates by the action of sulphuric acid.

Basic slag is the material obtained as a waste product in the "basic" process of steel manufacture; it usually contains from 15 to 20 per cent. phosphoric acid, and from 40 to 50 per cent. of lime, a portion of which exists as free lime.

Reverted phosphate is the name given to a form of phosphate insoluble in water but soluble in ammonium citrate solution, and which is valued at the same figure as water-soluble phosphate. Superphosphates have a tendency on storage to pass into reverted phosphate, and this form is also manufactured and sold as precipitated phosphate, containing from 35 to 40 per cent. phosphoric acid soluble in ammonium citrate.

Potash.—Potash is applied in cane-growing countries as pure sulphate containing about 48 per cent. potash. The chloride is occasionally used, and kainit and other crude salts appear occasionally in mixed manures.

Green Manuring.—Green soiling or green manuring is a practice which has been carried on for generations past. In Europe the method employed is to sow a catch crop of some quickly growing plant between the harvest of the one and the seed time of the succeeding crop; the catch crop is ploughed into the soil and acts as a green manure to the following crop. The principles of this practice are as follows. It had been known for a large number of years that leguminous crops (beans, peas, clover, etc.), although they contained large amounts of nitrogen, did not respond to nitrogenous manurings, and even frequently gave a smaller crop when manured with nitrogen than when unmanured. It was eventually established by Hellriegel and Wilfarth in Germany, about 1886, that leguminous plants are able to absorb nitrogen from the air. The absorption is not made directly by the plant, but by the agency of bacteria. If the roots of a leguminous plant be examined, there will be found attached to its rootlets a number of wart-like excrescences the size of a pin's head and upwards. These bodies, which are termed nodules, on being crushed and examined under the microscope, are found to consist of countless numbers of bacteria; these bacteria, living in symbiosis or commensalism with the host plant, supply it with, at any rate, a part of its nitrogen.

If then leguminous plants be sown and allowed to reach maturity, and then be ploughed into the soil, there is placed in the soil a large amount of nitrogen obtained from the air.

Green manuring is practised most extensively in Mauritius and in Louisiana, and also to an increasing extent in Hawaii and Cuba. In Louisiana, after plant cane and first ratoons have been grown, the land is sown with cow peas (*Vigna unguiculata*), using from one to three bushels per acre; in August or September the peas are ploughed in and cane planted in October. According to Stubbs, the crop of cow peas above ground is often removed as fodder for cattle, planters who do this holding that the roots supply sufficient nitrogen for the crop, but Stubbs states that when the green crop is ploughed in, an average increase over plant and first ratoon cane of 7·42 tons per acre is obtained over that secured when the green crop is removed for fodder; the amount of nitrogen afforded by a crop of cow peas is, according to Stubbs, about 100 lbs. per acre.

In Mauritius there are four crops used as green manures:—1. The Pois d'Achéry (*Phaseolus lunatus*). 2. The Pois Muscat.* 3. Pigeon Pea (*Cajanus indicus*). 4. Indigo sauvage (*Tephrosia candida*).

The first two are pea vines growing in dense thick matted masses. The pigeon pea is a shrub growing to a height of four or six feet; the indigo sauvage is also a shrub, but of rather more robust habit. The system generally followed is to grow cane up to third ratoons; the land is then planted with one or other of the above crops, the time during which it is rested under the leguminous crop being from one to three years, dependent on the land available. Where land sufficient for one year's rest only is available, the pois muscat is generally grown; the pois d' Achéry is generally allowed to grow for two years, and the pigeon pea and indigo for three or four. All four crops are planted from seed, which is sown about 15 to 18 inches apart. Where no land can be spared to rest, one or other of the above crops is occasionally sown between the rows of cane, and after a few months' growth cut down and buried.

Although the benefits of green manuring are undoubted, it must be remembered that the expenses connected with it are not small, and very possibly where virgin soil can be had in abundance it may for a time be more economical continually to take in new land than to renew the fertility of old. The benefits of green manuring are most pronounced on estates which have continually to plant on the same soil; such estates are found in Mauritius, Barbados, and other small islands.

Besides placing in the soil a supply of readily available nitrogen, green manuring has other advantages.

1. The advantages of a rotation are obtained.
2. The deep tap-roots of leguminous plants bring available plant food from the subsoil to the surface soil.
3. The ill effects of a naked fallow are avoided.
4. The interposition of a crop other than cane will act as a prophylactic towards fungus diseases and attacks of insects, for if the habitat of these parasites be removed for any length of time it must result in their diminution or disappearance from lack of food.

---

*The legumes known generally as "velvet beans" and in various parts of the world as Mauritius beans Bengal beans or Florida beans, were formerly put in the genus *Mucuna*. Following Bort, Bulletin 141, U.S. *Dept. of Agric. Bur. of Plant Indus.*, they are to be placed in the genus *Stizolobium*. The Florida bean is classed, as *S. deeringianum* and has small marbled seeds; the Mauritius bean, *S. aterrimum*, has black seeds; the Lyon velvet bean, *S. niveum*, has ashy seeds, and the Brazilian velvet bean, *S. pachylobium*, has black and white seeds. Some systematists would not admit these distinctions as being specific, and the beans as grown in Mauritius have black, white and marbled seeds, to the writer's knowledge.

In certain quarters, notably in Mauritius, after land has been under leguminosæ for a time, it is prepared for cane cultivation again by burning off the green above-ground crop. This process would seem to destroy the very benefits to obtain which the green manure was planted. Planters who follow this system claim as good a result as when the green crop is buried, and point to the saving in expense. To obtain definite information as to this process the writer once grew on small plots equal to $\frac{1}{500}$ of an acre crops of the *Phaseolus lunatus* and *Stizolobium sp.* The results calculated out to an acre were as below. The crop in both cases was six months between planting and harvesting, which was done when the seeds were ripe.

		Phaseolus lunatus. Kilog.	Stizolobium sp. Kilog.
Weight, dry matter, in	green crop	1621	2522
,, ,,	beans	132	466
,, ,,	roots	123	80
Nitrogen ,, in	green crop	30·3	54·0
,, ,,	roots	1·2	0·7
,, ,,	beans	5·6	16·7
Potash ,, in	green crop	42·0	46·5
,, ,,	roots	4·4	2·1
,, ,,	beans	1·2	9·5
Phosphoric acid in	green crop	11·4	14·4
,, ,,	roots	1·1	0·4
,, ,,	beans	0·7	4·2

It will be seen that about 80 per cent. of the manurial value of the crop was contained in the green crop; if this is burnt off the nitrogen is lost, but the potash and phosphoric acid remain in a form readily available for the coming crop of cane. The economy of burning off the green crop and losing the nitrogen is comparable with the practice of burning off trash; in any case there is obtained a large amount of mineral plant-food brought up from the subsoil. The high nitrogen content of the bean straw, and the possibility of using this material as bedding for plantation stock, and thus both conserving it and obtaining a pen manure rich in nitrogen, is worthy of notice.

Among other plants grown in tropical countries as green manure are *Sesbania ægyptiaca*, *Crotalaria juncea* and *C. laburnifolia*, *Phaseolus semierectus*, *Arachis hypogæa* (the earth nut), *Soja hispida* (the soy bean), *Dolichos lablab* (the bonavist bean), *Phaseolus mungo* (woolly pyrol), *Indigo tinctoria* (the indigo of commerce), and, in Hawaii, Italian lupines, the plant which was used by the ancient Romans for the same purpose.

De Sornay,[24] who has made a most detailed study of green manuring under tropical conditions, has given the following crop results obtained experimentally in Mauritius:—

WEIGHT OF CROP OF GREEN MANURES (DE SORNAY).

Plant.	Weight of Green Crop. lbs. per acre.	Nitrogen in Green Crop. lbs. per acre.
Cow peas (yellow)	50,200	190
Cow peas (grey)	51,000	219
Jack bean*	28,000	210
Pois Muscat (black)	42,000	210
Pois Muscat (white)	34,700	187
Pois Muscat (marbled)	34,500	248
Pois d'Achéry	23,100	83
Pois amberique†	42,600	226

When grown between the rows or simultaneously with the cane, the crop amounts to about one quarter that recorded above.

---

*Canavalia eusiformis.

†Phaseolus helvolutus.

Pen Manure.—In those countries which employ animal traction very large numbers of cattle and mules are kept for transport purposes, and large quantities of pen manure are produced annually, and it is remunerative to stall the cattle at night with sufficient litter, such as dry cane trash, to absorb their urine. In Mauritius and the British West Indies great attention is paid to this source of manure. The method adopted in Mauritius is as follows :—

The live stock of the estate, which may number from two to three hundred, are in great part kept in " parcs," which may be from fifty to a hundred yards square ; a portion of the parc is often covered in to provide shelter in inclement weather. The whole area is covered with cane trash transported from the fields and used as bedding. During the whole year if the supply of labour is sufficient, the soiled litter is in a continual process of renewal and removal, the bedding being replaced throughout on an average once a week ; on removal it is placed on stone platforms or in basins ten feet deep, both platforms and basins generally being about fifty feet square. The whole mass when completed is continually watered with fermented molasses and water or distillery refuse, and sometimes with dilute sulphuric acid ; the drainings collect in stone pits and are continually repumped over the heap of manure ; the object of this is to rot the manure and at the same time to fix any volatile ammonia given off. In from six to twelve months the manure is considered sufficiently rotten to place on the fields, where it is applied at the rate of from ten to twenty tons per acre to plant canes only, generally at an age of three months ; or occasionally the cane holes are filled with the manure and the tops planted on it.

The amount of manure made per animal per year is from fifteen to twenty tons where bedding is used, and, where the dry dung only is collected, from two to three tons.

With the introduction of mechanical traction the quantity of pen manure available has decreased. At first sight it would appear to be false economy to attempt to force the production of manure by bringing in more material than is necessary to absorb the urine and to contribute to the comfort of the animal as bedding. Watts[25], however, advised a contrary procedure, and is inclined to believe that the raw material rotted by the action of bacteria becomes much more efficacious.

The composition of the manure varies within considerable limits ; where a reasonable amount of bedding has been used, the percentage of nitrogen generally, in the writer's experience, lies between 0·6 and 0·8 per cent., falling to 0·3 to 0·5 per cent. where an excess of trash has been brought to the stables or pens ; the potash and phosphoric acid do not seem to show any variation dependent on the amount of bedding used, both lying between the values 0·2 to 0·7 per cent. ; these figures refer to manure with from 70 to 80 per cent. of moisture.

The expense of making pen manure is very considerable ; the cost in Mauritius before the Great War varied from two to five shillings per ton, a portion of which expense would be incurred in any case ; the carting and application cost about one shilling per ton, making the total outlay from three to six shillings per ton. Pen manure is almost exclusively applied to the plant crop. In Mauritius the holes in which the canes are planted are sometimes filled with material, and otherwise it may be distributed round the base of the stools of cane when a few months old. In other districts where mechanical tillage is in operation, pen manure and similar material is broadcasted by manure distributors and incorporated in the soil by harrows in the operations previous to planting.

The experiments with pen manure in the British West Indies point to the conclusion that applications to plant canes followed by the use of readily available nitrogen on ratoon crops give the best financial returns.

With the general increase in the size of estates and consequent necessity for mechanical traction, pen manure is losing its importance, and its place is being taken by artificial fertilizers. The fertility of soils in districts such as Barbados and Mauritius over many generations is, the writer believes, to be largely attributed to the extensive and well-ordered use of the pen manure manufactured on the estates. The modern tendency is to grow crops with the aid of irrigation and of the more concentrated artificial manures, and it largely becomes a question of the cost of the labour required to make and to apply the pen manure compared with that required for the purchase and application of the artificial manure. It is not yet known what will be the final effect on the soil in several generations of the modern practice.

The Return of Plant Residues.—Considered as a principle in agriculture, everything produced from the soil, except that portion which forms the commodity which is marketed, should be returned to the soil. Generations of experience have established this principle in the older civilization, and to its observance is to be attributed the long-continued productivity of the soils of Europe and of Asia. To its neglect is to be assigned the continued march westward of American farming. The very many analyses which have been made of the cane afford means to construct a balance sheet of the demands made by the cane on the soil, and of the distribution of the plant food removed. The analyses quoted in Chapter II, however, show that from analysis to analysis very great difference results. Reviewing, however, a great mass of data the following balance sheet can be presented, as giving an average of the essential features, with the proviso attached that individual analyses can be found showing very different results :—

Agricultural Balance Sheet of a Cane Crop.
Lbs. per 1,000 tons of Stalks.

	Lime.	Potash.	Phosphoric acid.	Nitrogen.
Leaves, Tops, Roots	2000	7500	1100	2500
Stalks	500	3000	1000	1000
Sugars	50	550	15	50
Molasses	250	2150	95	250
Bagasse	50	300	100	100
Press cake	750	—	790	600

In the construction of this balance sheet the manufacture of 96° test sugar is assumed together with a high extraction at the mill. It is at once apparent that the distribution of the elements brought to the factory with the stalks will vary with the " extraction " and by the distribution of the output between sugar and molasses. This in turn will be controlled by the purity of the juice. In constructing the table, allowance is made for the quantity of lime used in defecation.

Inspection of the tabulated statement shows that the greater proportion of the material removed from the soil by the crop is contained in the residue of leaves, tops and roots, which normally remain on the land. In the case of the phosphoric acid, however, the division between stalks and residues is approximately equal. As regards the material entering the factory, 70 per cent. of the potash is found in the molasses, 20 per cent. in the sugars and 10 per cent. in the bagasse. Of the phosphoric acid, 80 per cent. appears in the press cake, 10 per cent. in both bagasse and molasses, and only a very small quantity in the sugars. Of the nitrogen, 60 per cent. is accounted for in the press cake, 25 per cent. passes to the molasses, 10 per cent. is found in the bagasse and 5 per cent. in the sugars. That quantity which appears in the molasses is mainly in amide form, the albuminoid nitrogen being precipitated in the defecation process. Of the lime the press cake contains 50 per cent. more than is introduced with the stalks, most of the balance going to the molasses. Based, however, on the whole amount of matter taken from the soil, only 20 per cent. of the potash is found in the molasses, 5 per cent. in the sugars, 3 per cent. in the bagasse, the balance, approximately 70 per cent., appearing in the leaves, etc. Of the total amount of phosphoric acid, half remains in the leaves and half is found in the factory products, the press cake accounting for the major portion. Similarly, the leaves, etc., contain 70 per cent. of the nitrogen, 60 per cent. of the remainder being found in the press cake, with most of the remainder in the molasses. It follows, then, that the sugar cane cannot be considered an exhaustive crop since so much of the material removed from the soil is actually returned or capable of being returned thereto.

The agricultural economy of a plantation is influenced by the way these crop residues are treated. Considering first the material contained in the stalks, the greatest possible source of loss is in the molasses. Practice differs as to its disposal. In Cuba nearly always, in Java and in Hawaii very often, the molasses are sold as a part of the crop, or failing to find a market are run to waste. Prior to 1914, the price of molasses in Cuba at the plantation was about 2½ cents per U.S. gallon, or $4.00 per short ton, and equivalent prices prevailed elsewhere. A short ton of molasses will contain on an average 80 lbs. of potash, which at 5 cents per lb., the then price for a lb. of potash in high-grade material, exactly equals the price paid for the molasses sold nominally on its content of sugars. Considered, then, from the point of view of the agricultural economist, the sale of molasses off the plantation should be condemned. The value of the potash thus annually removed is very great. The world's production of cane sugar now (1919) amounts to about 13,000,000 tons, and the molasses corresponding to this quantity will contain about 130,000 tons of potash of value $13,000,000 at pre-war prices for the potash alone, together with another $4,000,000 on account of the nitrogen.

The most natural method of its utilization would be in the production of alcohol, with the recovery and return to the soil of the distillery "slop" or at least with the recovery of the potash, as is often done in beet distilleries on the continent of Europe. In some districts, notably Demerara, Peru and Natal, the distillery often forms an integral part of the plantation, but generally only the manufacture of alcohol is considered, the waste product being neglected. Many years ago, however, a Demerara plantation, "Montrose," installed a "lees" irrigation plant, which unfortunately only operated a short time prior to the destruction by fire of the distillery. Some attempt is, however, made there to dig out periodically the "lees" pond, and return the bulky evil-smelling material to the fields. Possibly in the future the development of the internal combustion engine using alcohol may stimulate each plantation to thus provide its own source of power for ploughs and locomotives, together with the retention of the material removed from the soil.

Interest in the return of the molasses to the soil as manure was stimulated by the results obtained in 1908 by Ebbels and Fauque[26] in Mauritius, and since then numerous experiments have given rather discordant results. Harrison,[27] for example, in Demerara found no increased yield following on the application of molasses, but the results in Java,[13] quoted below, indicate a real benefit, probably, as pointed to by the returns, due to the sugars and not to the potash or nitrogen.

ACTION OF MOLASSES ON THE YIELD OF SUGAR CANE.

	Application per acre.	Cane. Tons per acre.	Sugar. Tons per acre.	Cane. Tons per acre.	Sugar. Tons per acre.
1.	545 lbs. ammonia sulphate ..	69	6·6	61	7·0
2.	As in 1, with 2350 lbs. molasses	81	6·8	74	7·6
3.	As in 1, with the nitrogen in the molasses as ammonia..	71	6·7	65	7·4
4.	As in 1, with the potash in the molasses	72	6·6	66	7·4
5.	As in 1, with the sugar in the molasses	75	6·8	68	7·6

Very similar results were obtained by Bonâme[28] in Mauritius with an application of one litre (3 lbs.) of molasses per hole (3,000 holes to the acre).

The action of molasses on soils has been examined by Peck,[29] who found that following its application there is first a decrease in the nitrogen in the soil due to denitrification followed by an eventual increase over and above the quantity originally present. He therefore recommends that when molasses are returned to the soil an interval should elapse between the time of application and planting.

The bagasse ashes contain a considerable quantity of potash and phosphoric acid, and that proportion of this material which is recoverable is usually taken back to the fields alone, or else mixed with press cake or other material. Much of the potash, however, appears in the form of a potash glass or slag, and much is also carried forward in a volatile state into the flues and is lost.

The press cake is particularly rich in nitrogen and in phosphates. Analyses on record show much variation. Expressed as a percentage on dry matter, Harrison[30] found in three samples 1·67, 2·44, and 1·08 per cent. Geerligs[31] in Java found from 2 to 4 per cent., and expressed on actual material Ledeboer[32] found from 0·66 to 1·59 per cent. The percentage of phosphoric acid averages about 3 per cent. on dry weight. Press cake is a material of the same nature as pen manure, and its effects are disproportionate to the quantity of nitrogen and phosphoric acid it contains. It is usually applied at the rate of five tons per acre, and is indicated as being most suitable for light, sandy soils.

By far the greater quantity of plant food removed from the soil is contained in the leaves and other waste matter. Estimating that 1,000 tons of cane contain 2,500 lbs. of nitrogen, and that the world's output of cane is now 130,000,000 tons, the value of the nitrogen therein contained at pre-war prices amounts to about $100,000,000, and a very great proportion of this is annually wasted in the combustion of the trash. This custom obtains generally in the Hawaiian Islands, in Demerara, and in Java where the fields after the cane harvest are turned over to the native Javanese for rice culture. In Mauritius, however, much of the trash is used as bedding for the plantation stock, and thus finds its way back to the soil as pen manure, and a similar routine obtains in the British West Indies. In Cuba it is the almost invariable custom to let the trash rot on the fields, where it remains as a blanket. It thus not only is returned to the soil, but equally acts as a mulch preventing surface evaporation, and to this custom the long-continued fertility of much of the Cuban cane lands is to be attributed. In those districts where the trash is burned off either before cutting or afterwards, it is not ignorance that causes the custom to obtain, but rather lack of labour or absence of means of satisfactorily burying or turning under the very bulky mass of material.

Apart from the value of the nitrogen, the presence of decaying vegetable matter in the soil has an important bearing on its fertility in regard to the formation of humus and in increasing the water-holding capacity of the soil, and in this connection it may be remarked that those plantations on the island of Hawaii that have made a practice of turning under the trash always suffer less during a drought than do those which habitually burn it off.

During the period 1901-13 extensive experiments were made on a Hawaiian plantation, in all 109,990 tons of trash being buried. The effect of this procedure is thus described :—[33]

> " Where two ratoons were formerly the maximum, four are now becoming the rule. The yields, instead of decreasing with each subsequent ratoon, have increased. The 1908 crop was the first to have trash left over its entire ratoon area. That and the succeeding crops show an average yield of 4·102 tons of sugar per acre ; the seven preceding crops gave 3·329 tons of sugar per acre. The 1914 crop to date has yielded 5·2 tons per acre and is expected to go still higher. While all the credit cannot be given to trash, there is no doubt whatsoever that leaving the trash has been the principal factor."

The actual operations there followed on a rainfall plantation are described by Larsen[33] :—

> " After the cane is cut the trash is hoed away from the stools into the furrow. This work requires about two men per acre per day and is called " palipali-ing." This is followed by offbarring, which consists of ploughing off or away from the stools. The soil by this operation is thrown against and partly over the trash and assists materially in hastening its decay. A 10, 12, or 14-inch plough is used for offbarring. A revolving knife or sharp coulter is attached to the plough-beam to make a clean cut ahead of the plough. One man with two mules can offbar 2 to 2½ acres per day. After offbarring hoeing is done in the cane lines. In the furrow, that is, between the lines of cane, the weeds in most cases are kept down effectively by the trash.
>
> Cultivation between the rows begins from one to two months after pali-pali-ing. After two or three more hoeings in the cane rows as occasion demands and as many more cultivations the trash will have become so thoroughly broken up and disintegrated that the furrow can be small-ploughed without trouble. A small 8-inch plough is run usually four times through the furrow to loosen up the soil and to mix in the trash. After small-ploughing the cane is hilled. This is done with hoes, ploughs, double mould-boards, or discs. With this operation the rotted and partly rotted trash is thrown toward the cane and is more thoroughly buried and mixed with the soil."

In certain soils in Demerara the presence of decaying trash has according to Harrison[34] a specific function in neutralizing the effect of the large quantity of alkaline soil water there present. On this point he writes :—

> " In experiments in which (1) soil water was allowed to evaporate into the air and (2) caused to evaporate in an atmosphere consisting almost entirely of free carbon dioxide, it was observed that when the evaporation takes place in air,

> nearly free from carbon dioxide gas, practically the whole of the lime salts are deposited as calcium carbonate, while the water is being concentrated to one-third of its original bulk, and the remaining water becomes a saline one, containing large quantities of magnesium salts as chlorides, sulphates and carbonates in solution. The calcium salts, which are known to exercise a profound influence in reducing the highly toxic action of the magnesium chloride and carbonate on plants, are almost wholly removed from solution and the soil water becomes in a condition which is poisonous to vegetation; this is probably what takes place during prolonged periods of dry weather on more or less worn-out cane soils, in which by injudicious cultivation and especially by long-continued destruction of the trash by burning the normal proportion of organic matter has been largely reduced. When, on the other hand, the evaporation takes place in an atmosphere heavily charged with carbon dioxide, as in the air present in soils containing the proportion of organic matter normal to good soils, the calcium salts remain for a long time in solution until the liquid commences to become a saturated brine, and this for a prolonged period continues to modify the toxic action of the magnesium salts. It is possible on such land that the soil water during drought may become concentrated in the upper layers of the soil, without any material injury to the plant, until by concentration of the soil water the toxic action of the magnesium salts exerts itself."

It used to be one of the boasts of German agricultural economists that, in exchanging white sugar for cereals, they robbed America of much of its potential fertility, while offering nothing in exchange, since the sugar was composed entirely of materials supplied by water and carbon dioxide. There is much truth in this boast, and it is to be noted that the policy of the German Empire was to retain the molasses at home, and use it as one of the means to build up a great alcohol industry. If such a policy were to be followed in the tropics there should be no such thing as exhausted soils, and on the contrary the lands should with continued cultivation become more and more fertile, and it should even be possible to grow heavy crops continuously without resort to supplies of readily available nitrogen, although with this additional stimulus there is nothing to indicate that the profits might not be even yet increased. It is finally to be noted that white sugar manufacture alone in place of raw does not result in the retention of the greater part of the plant food unless the molasses also are reserved, for the manufacture of white sugar only results in transferring a small proportion of the plant food from the raw sugar to the molasses, and if these are removed the total loss remains the same.

Rotations.—Different crops have a predilection for different forms of mineral matter, and thus remove from the soil very different amounts of the different constituents of plant food, so much so that the ash of a crop may consist in general of one predominant constituent. By growing continually one and the same crop on the same piece of land there is then a tendency to exhaust one particular constituent. If, however, different crops be grown in rotation, an element of plant food which was removed in large quantities in one year is not absorbed to such an extent by the succeeding crop, and by the time the crop first in rotation is planted a second time a sufficiency of the particular material exhausted by this crop will have become available, due to the natural process of disintegration which soils are continually undergoing. As an example of such a rotation, the Norfolk system may be quoted. This is wheat, roots, barley, clover; the roots are consumers of potash, the wheat takes up phosphates, the barley absorbs silica, and the clover feeds largely on lime and magnesia.

It is especially to be noted in this rotation that the wheat follows the leguminous crop of clover; wheat is a crop that responds to a supply of nitrogen, in this case in part provided by the root residues of the clover; the cane, too, demands, as is shown in the manurial trials quoted above, for its successful growth a supply of readily available nitrogen, and in certain districts a leguminous crop precedes the cane crop.

Cane-growing districts may be divided into those where the cane forms the sole output of the soil, and those where it is alternated with other crops. Into the first category fall the districts of Cuba, the Hawaiian Islands, British Guiana, Trinidad, Fiji and Peru. In Java, Egypt and British India, a complete rotation is practised, and in Louisiana and Mauritius the cane fields are rotated with leguminous crops which are ploughed in.

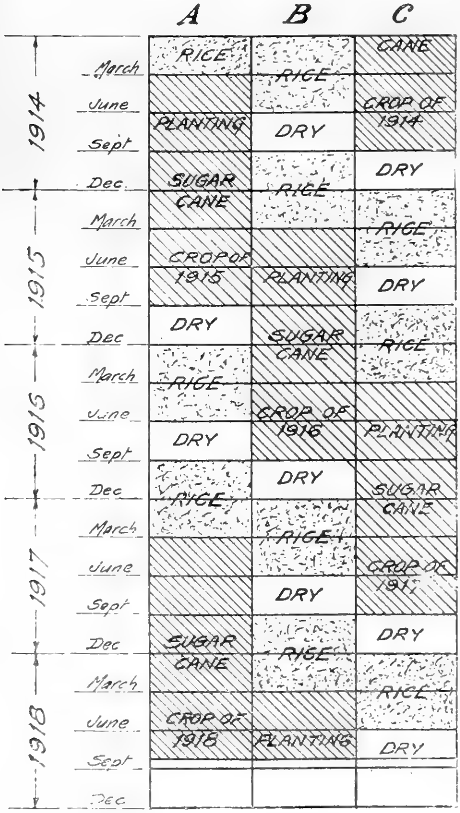

Fig. 19

In Egypt, on the lands controlled by the Daria Sanieh Co., cane was grown for two years, preceded by a year's fallow; following on the cane crop, corn and clover were grown; the cane itself was not manured, with the object of obtaining a sweet cane. Private owners follow a rotation of clover, wheat, cane (no ratoonage), and manure the cane heavily.

In Louisiana the general rotation is plant cane, ratoons, and cow peas (*Vigna unguiculata*) ploughed in as a green manure.

In Mauritius it is general to grow cane up to third ratoons, after which a green leguminous crop occupies the land for from one to four years.

In Java the system of land tenure enforces a rotation. Land suitable for rice cultivation (*sawah*) is leased by the native Javanese in perpetuity, and may not be rented by Europeans for a period exceeding eighteen months, after which the native is obliged to cultivate it for an equal period. During this period the native takes off two rice and two dry land crops; the rice crops occupy the land for six months each, the dry land crops only taking three months apiece. Almost always a dry land crop follows a cane crop, and cane follows rice, the commonest rotation being :—Cane, ground provisions (dry crop), rice (wet crop), ground provisions, rice, cane. In ground provisions are included ground nuts, beans, maize, cassava and yams, so that not infrequently legumes enter into the rotation. The diagram in *Fig.* 19 indicates the sequence of crops and the way an area of land is subdivided at any period.* Lands not suited to rice cultivation may be alienated to Europeans, and on them a continuous crop of cane may be grown. These lands, however, form only a small part of the cane fields of Java.

---

*For this diagram, and for other information concerning Java methods, I am indebted to Dr. H. L. Lyon.

Where the sugar cane forms the main crop in India, the following typical rotations, amongst others, are given by Mukerji :—[35]

Bengal.—High and light soils. Rice (May to September) ; pulse or oil seed (October to March) ; jute (April to September) ; pulse or oil seed (October to March) ; rice (May to September) ; potatoes (October to February) ; sugar cane (February to February) ; rice (May to September) ; pulse (October to March), &c.

Punjab.—Dhaincha (*Sesbania aculeata*)or sunn hemp (*Crotalaria juncea*), or cow peas (*Vigna unguiculata*) cut in bloom in August ; potatoes (October to February) ; sugar cane (February to February) ; pigeon pea (*Cajanus indicus*) or rice ; potatoes ; sugar cane.

Whenever practised the absence of a rotation is a weak point in sugar cane culture ; the rich fertile soils which are often met with in the tropics for a number of years support a continuous unvaried crop, but eventually they tend to become barren. In certain countries, as Demerara, where abundance of virgin soil awaits cultivation, proprietors can continually empolder new lands and allow that which has become barren to lie fallow, and after a space of time, during which by the continued disintegration of the soil plant food has become available, again plant the old abandoned land.

The effect of continuously growing cane on the same soil has not been, so far as the writer is aware, distinctly studied, but the following quotation from A. D. Hall[36] with reference to the Rothamsted wheat experiments seems broadly applicable also to cane culture :—

> " Plot 10 has received an annual dressing of nitrogen only, in the shape of ammonium salts since the earliest dates of the experiments. It will be evident from the curve showing the crop production that, despite this long-continued use of a manure supplying but one element of plant nutrition, the crop has been wonderfully maintained. Whereas the average production over the whole period is increased by the supply of minerals to the extent of 1·8 bushels, the nitrogen alone has produced an average increase of 7·6 bushels, the unmanured plot being taken as the standard in each case. The curve, however, shows that the production on this Plot 10 is declining, notwithstanding the great reserves of mineral plant food with which the soil started. At the present time also the crop on this plot presents a very unhealthy appearance, is very slow to mature, and is extremely liable to rust.
>
> We thus see that it is possible to grow a cereal crop like wheat, year after year, on the same land for at least sixty years without any decline in the productiveness of the soil, provided an appropriate manure be supplied to replace the nitrogen, phosphoric acid and potash removed by the crops. There is no evidence, in fact, that the wheat gives a smaller yield when following a long succession of previous wheat crops than when grown in rotation, although the vigour of the plant does not appear to be so great. The real difficulty in continuous corn growing is to keep the land clean ; certain weeds are favoured by the wheat and tend to accumulate, so that the land can only be maintained clean by an excessive expenditure in repeated land hoeing. Notwithstanding all the labour that is put on the plots, the ' Black Bent ' grass, *Alopecurus agrestis*, has from time to time become so troublesome that special measures have had to be taken to eradicate it and to restore the plots to a reasonable degree of cleanliness."

It does not seem then altogether unreasonable to attribute in part the damage done by fungus and insect pests to the continual growth of cane on the same soil, as in this way the pests have a continuous habitat.

In discussing rotations it may not be out of place to refer to the toxic excretion theory ; it was originally suggested by De Candolle that plants excreted a toxic substance which prevented the continual growth on the same soil, and in this way explained the benefits of rotation. After definite abandonment this idea has been revived, mainly by Whitney and Cameron, but its discussion lies altogether without the limits of the present textbook.

Micro-organisms in Relation to the Soil.—This subject, while only indirectly connected with manuring, may be touched on here in some special connections with the sugar cane. The flora of the soil is made up of bacteria, protozoa, fungi and moulds. The fertility of the soil is largely controlled by the organic life therein, and it is the first-named class of its inhabitants that have been most studied. Following on Stoklasa,[37] soil bacteria in relation to nitrogen may be classed as follows:—

1. Bacteria which decompose organic nitrogen and produce ammonia.
2. Bacteria which oxidize ammonia to nitrates.
3. Bacteria which oxidize nitrites to nitrates.
4. Bacteria which reduce nitrates to nitrites and then to ammonia.
5. Bacteria which reduce nitrates to nitrites and eventually to nitrogen.
6. Bacteria which change nitrates, nitrites and ammonia to protein compounds. This type includes members of all groups.
7. Bacteria which fix atmospheric nitrogen.

Of these forms those connected with the production of nitrates have been most studied and the elucidation of the problem forms one of the world's classics of research. Briefly, the formation of nitrates, whence plants mainly obtain their nitrogen, takes place in a number of stages. First of all organic nitrogen is broken down into ammonia salts. The ammonia salts are then converted to nitrites by organisms, of which two types are known, one, *Nitrosomonas*, peculiar to the Old, and the other, *Nitrosococcus*, occurring in the New World. Following on the activities of these organisms, the nitrites are converted into nitrates by an organism, *Nitrobacter*, of which one type only is known. Conversely, a reverse process takes place whereby the nitrates are reduced to nitrite and finally to gaseous nitrogen. The conditions required for the development of the maximum activity of the nitrifying organisms are:—

1. The limits of activity are 5°-55° C, with an optimum of 37° C.
2. Absence of a great excess of organic matter, of alkaline chlorides or carbonates.
3. A base is required to neutralize the acid formed, and for this purpose calcium carbonate is most efficient, though the naturally occurring zeolites in soils may suffice.
4. A supply of carbon and of oxygen is necessary, and the former may be supplied by carbonate or by carbon dioxide.
5. Water, but not an excess, is necessary.
6. Absence of direct sunlight.

The conditions which favour the development of the denitrifying organism are the reverse of the above, and it hence follows that nitrification will be at a maximum in well drained, well tilled, well aerated soils and in the presence of calcium carbonate. Denitrification and infertility will be found in untilled, badly drained, water-logged soils, and in others where, for example, an alkaline reaction results from the too long-continued application of sodium nitrate, or where salty subsoil water rises to the surface, or where there is a great excess of organic matter.

To the action of direct sunlight is to be attributed one of the bad effects of a naked fallow, which always results in a loss of nitrates, and this observation has been utilized by Eckart in U.S. patent 1,274,527. He proposes, and the scheme has been put into operation at Olaa in the Hawaiian Islands, to lay down strips of paper between the cane rows, whereby artificial nitrate beds will be formed. Simultaneously the growth of weeds is prevented, the cane being able to grow through the paper, which is made as a by-product from superfluous bagasse.

The nitrifying organism requires a supply of carbohydrate for its best development, and to Ebbels is due the suggestion that molasses may be thus utilized to advantage.

Types of soil organisms distinct from the above are those which break down organic carbon compounds. Two classes may be distinguished :—

1. Those which oxidize organic carbon compounds to carbon dioxide, etc.

2. Those which reduce organic carbon compounds to methane, etc.

To the first class probably belong those organisms which enter the sugar-house with the canes, and to which the deterioration of sugar is, at least in part, to be attributed.

To the fungi, moulds and protozoa ammonification may also be ascribed, though very much less is known of their action than is known of the bacteria. To the last mentioned a harmful action may be due, as there is reason to suppose that they may attack and destroy beneficial bacteria.

REFERENCES IN CHAPTER VI

1. *Jour. Agric. Soc. India*, 1843, 2, 270; 1845, 4, 61.
2. Trans. of the Royal Soc. of Science and Arts, Mauritius, 1849, 1, 164.
3. Natuur Kundige Tijdschrift, 1860, 21, 165; 1861, 23, 112.
4. Engrais chimiques.
5. *Proc. Am. Chem. Soc.*, 1877, 2, 52; Trans., 1879, 1, 416.
6. *S. C.*, 1890, 22, 634.
7. *S. C.*, 1897, 29, 453.
8. *W. Ind. Bull.*, 1904, 2, 6.
9. *S. C.*, 1887, 19, 509.
10. H.S.P.A. Ex. Sta., Agric. Ser., Bull. 16.
11. H.S.P.A. Ex. Sta., Agric. Ser., Bull. 29.
12. Proc. Hawaiian Chemists' Assoc., 1917.
13. De Cultuur van het Suikerriet op Java.
14. Imp. Dept. of Agric. for the West Indies, Pamphlet 30.
15. *Annales Agronomiques*, 1879, 5, 283.
16. Java *Arch.*, 1912, 20, 1441.
17. *W. Ind. Bull.*, 1911, 9, 35.
18. *Soil Science*, 1917, 4, 19.
19. U. S. Dept. of Agric., Bur. of Soils, Bull. 1.
20. H.S.P.A. Ex. Sta., Agric. Ser., Bull. 8.
21. Porto Rico Ex. Sta. Circular 12.
22. *Jour. Agric. Sc.*, 1904, 1, 87.
23. H.S.P.A. Ex. Sta., Agric. Ser., Bull. 43.
24. Green Manures and Green Manuring.
25. *Int. Sug. Jour.*, 1919, 21, 53.
26. *Jour. Fab. Suc.*, 1909, 30, 63.
27. *Int. Sug. Jour.*, 1913, 15, 427.
28. Annual Report, Station Agronomique, Mauritius, 1909.
29. H.S.P.A. Ex. Sta., Agric. Ser., Bull. 24.
30. *S. C.*, 1887, 19, 192.
31. Java *Arch.*, 1893, 1, 175.
32. De Cultuur van het Suikerriet op Java.
33. U.S. Dept. of Commerce, Miscellaneous Series, 30.
34. Report, Agricultural and Experimental Work, Dept. of Sc. and Agric., British Guiana, 1908-9.
35. Cyclopædia of American Agriculture, 3, 108.
36. An Account of the Rothamsted Experiments.
37. U.S. Dept. of Agric., Office of Ex. Sta., Bull. 94.

CHAPTER VII

THE IRRIGATION OF THE CANE

ALTHOUGH the greater part of the sugar cane crop of the world is produced under natural conditions, no inconsiderable proportion is grown under irrigation. The districts where irrigation forms an obligatory feature of cane cultivation are the islands of Oahu, Maui, and Kauai, in the Hawaiian Archipelago, Peru, Egypt, British India, the small area in the south of Spain, and a few plantations in the Black River district of Mauritius. The combined production of these areas now (1919) amounts to about 3,500,000 tons of sugar or about 25 per cent. of the world's production. Partial irrigation is also practised in Java to a considerable extent, but the conditions here are such that crops can be and are grown under natural conditions, and irrigation is a minor rather than a major part of the economy of a plantation. Limited areas are also irrigated in Cuba in the Guines district, in Guantanamo, at Nipe Bay and at Constancia (Cienfuegos), and some irrigated cane is produced also in Jamaica, Porto Rico, Formosa and Portuguese East Africa.

Water used in irrigation is measured in a number of systems:—As a flow per unit of time, or as a depth per unit of area. The British flow unit is the cubic foot-second, or '*cusec*' usually referred to the acre. The metric system uses the litre-second referred to the hectare (1 c. ft. = 28·2 litres and 1 hectare = 2·47 acres). The British depth measurement is the acre inch equal to 101·5 long tons, 3,652 c. ft., 22,736 imperial gallons, 27,294 U.S. gallons and 103,130 litres. Hawaiian practice reckons in so many million gallons per day.

Methods of Irrigation.—Hilgard[1] distinguishes the following methods:—1. Surface sprinkling. 2. Flooding—(a) By lateral overflow from furrows and ditches; (b) by the check system. 3. Furrow irrigation. 4. Lateral seepage from ditches. 5. Basin irrigation. 6. Irrigation from underground pipes.

Of these methods, the first, second, third and fourth find application in one or other of the cane-producing areas. These methods are described under the regional headings.

Hawaiian Islands.[2]—The privately owned irrigation works in this locality are unparalleled in other districts, and at December 31st, 1914, represented a depreciated investment of $12,818,512, though the actual capital expenditure has been very much greater. From actual capital expenditures that have been published may be quoted:—

Ewa.—Total cost of pumps delivering 22,000,000 gallons daily, £375,000.

Koolau ditch in Maui, 10 miles long and delivering 80,000,000 gallons daily, £91,000.

Olokele ditch in Kauai, 13 miles long and delivering 60,000,000 gallons daily, £75,000.

Kohala ditch in Hawaii, 14 miles long, 12 feet wide at top, 7½ feet wide at bottom, and 4½ feet deep, £83,000.

Waiahole ditch in Oahu, 14¾ miles long, with 10 miles of tunnel, 3¼ miles of concrete ditch, and 1½ miles of steel syphon pipe and delivering 80,000,000 gallons daily, £500,000.

Two methods of obtaining water are in use: (1) Pumping from subterranean sources, and (2) interruption of upland sources and conveyance to the plantations by systems of canals, tunnels, syphons and flumes. Both of these methods are combined with systems of reservoirs, whereby an excess flow may be conserved, and where often the night flow from the ditches is also stored. The pumping plants are located at or near sea level, and it has been found less expensive to elevate the water through long pipe lines than to sink shafts at a high level and to install mining pattern pumps. In 1909 it was estimated that the water pumped daily with an average lift of 200 feet was 595,000,000 gallons, of which 360,000,000 gallons were pumped in the Pearl Harbour district in Oahu, 150,000,000 in Central Maui, and the balance mainly in Kauai. Since then the quantity of water pumped has tended to decrease, following on some extension in the ditch systems leading to the mountain areas, which now (1919) deliver some 800,000,000 gallons daily. These ditches, which are mainly concrete-lined so as to prevent seepage, and which in all aggregate several hundred miles in length, have been constructed with great engineering skill; they have entailed tunnelling through mountains and the passage of deep ravines, the system here generally followed being the use of inverted steel syphon pipes reaching to a diameter of eight feet. The largest reservoir built is that at Wahiawa, on the island of Oahu, with a capacity of 2,750,000,000 gallons, the total capacity of all the reservoirs approaching 10,000,000,000 gallons. The system of applying water used is always one of furrow irrigation, illustrated in *Fig.* 20 in plan,

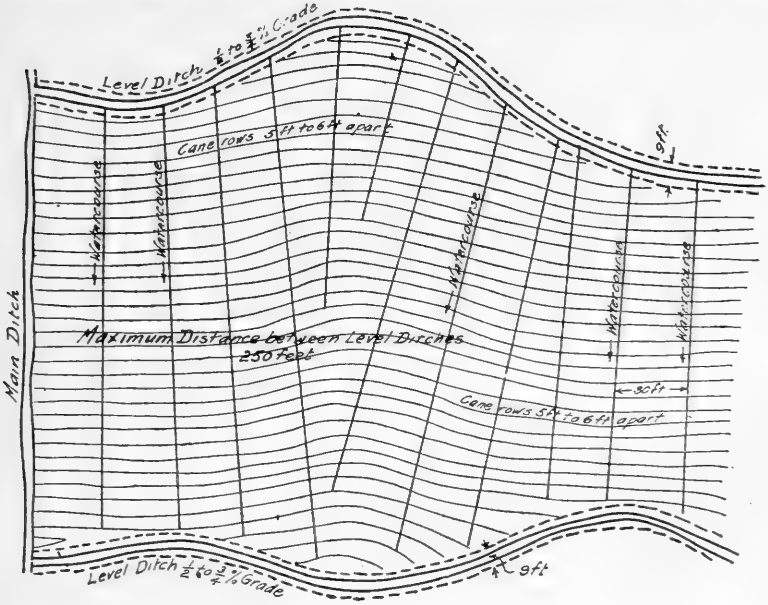

FIG. 20

and in perspective on *Plate* XI. The supply ditch is indicated at the left, and from this water is fed to the level ditches, laid out at intervals of 150 to 200 feet, and with a fall of from $\frac{1}{2}$ to $\frac{3}{4}$ per cent. grade. From the level ditches lead the water-courses, laid out at distances varying from 30 to 75 feet, the distance depending on the nature of the soil and on the grade. Paralleling the level ditches and at right angles to the water-courses are the cane rows, from 5 to 6 feet apart, down which the water flows. The furrows in which the cane is planted are laid out with the level, and on their accuracy depends much of the efficiency obtained in the application of the water. On very level land it is possible, and on porous soils advisable, to allow the water delivered from the water-courses to flow both ways in the furrow, thus halving the length of travel. From the time of planting up to about three months before harvest it is the object of the plantations to irrigate the whole area once every week, though frequently the available supply of water is insufficient. During the three months preceding harvest only enough water is supplied to maintain the vitality of the cane, and during this time it actually evaporates its own water.

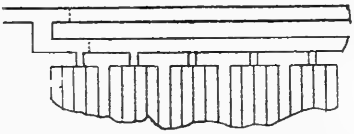

FIG. 21

Peru.[3]—In Peru the cane is entirely dependent on irrigation, the melted snow from the Andes being the source of water. The arrangement of the ditches generally followed is shown in *Fig.* 21. The *regadora*, or main canal, leads across the higher part of the field; from this, by means of a temporary opening, water is brought to the *cavesera*, and is allowed to flow out and run over the *cintas* or beds of five rows. The fields are all on the slope, and the water is seldom pumped back, but is allowed to flow to the fields at a lower level. This method of using the water may be compared with the system of water-courses and furrows at right angles to each other used in Hawaii, whereby a long travel for the water is avoided. Where water is scarce, the system shown in Fig. 22 is used, *a a* being dividing ridges made with the hoe, and which cause the water to run in a zigzag fashion over the field. At the time of planting the fields are irrigated every five to eight days, water being cut off three months before the harvest.

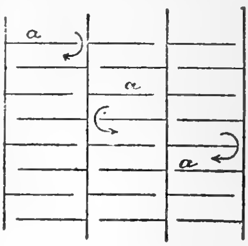

FIG. 22

Mauritius.—On the few plantations where irrigation is practised a system essentially similar to that described as in use in Hawaii is followed. The water is obtained entirely from streams and reservoirs, no pumping plants being yet installed. The potentiality of irrigation here is equal to that already obtained in the Hawaiian Islands.

Egypt.[4]—The source of water is the Nile, and cane is watered as soon as it is planted in February; thence irrigations follow every ten days till the end of August, after which the cane is watered every fifteen or twenty days till the end of October, at which time irrigation is stopped.

Demerara.—The method by means of which fields may be irrigated will be readily understood on referring to *Figs.* 40 and 41; a drain, indicated by the line *g*, is dug parallel to the cross canal *c* and connected to it. Down the centres of the beds irrigation drains 15 inches wide and 9 inches deep are dug, along which the water runs into the main drain *f* and thence to the drainage trench *e*.

In the "English" fields the main drainage trench is dammed at the proper points, and the navigation water is cut into the field, which by these means may be flooded.

Although the water available in the rivers is very great, irrigation is very little practised, and its results are often harmful; the best ever accomplished is the prevention of the entire loss of crop. The only large-scale irrigation that the writer saw here was in English fields flooded as described above, whereby a system of lateral seepage obtains. Harrison has demonstrated the toxic nature of the subsoil waters in this colony; such a system would bring these waters to the surface, and herein may lie the cause of the poor results obtained.

Java.[5]—Irrigation in Java is controlled by the Government in the interests of the native land-holders and of the culture of rice; the irrigation of the sugar cane is a matter of secondary importance. During the dry monsoon, usually reckoned to last from June 15th to November 15th, the water available is divided between cane culture and rice culture, the cane planters being allowed the use of the water from 6 a.m. to 3 p.m., and the native rice cultivators receiving it for the rest of the day. During this period it is young cane almost exclusively which is irrigated. In the wet monsoon, which lasts the rest of the year, the water is given to the native cultivator entirely. In cases of prolonged failure of the rains, however, some portion may be allotted to the sugar cane. The cane planter, however, benefits indirectly from the water used in the rice culture, since on taking over the land he has the benefit of the large quantity of water retained by the soil after it has been inundated during the rice crop. A second benefit is obtained from the large amount of silt thus deposited on the land, whereby the use of mineral manures is avoided. Following on De Meijier,[6] the Solo river carries on an average 1 kg. of silt per cubic metre, the silt of the Brantas river containing from 0·43 per cent. to 0·60 per cent. of potash, from 0·35 per cent. to 0·65 per cent. of phosphoric acid, and from 0·25 per cent. to 0·27 per cent. of nitrogen.

In laying out fields in Java, the main ditches into which water is led from a river or canal are usually 75 metres apart. They are usually about 3 ft. wide at top, 1 ft. at bottom, and 3 ft. deep. The laterals run at right angles to the main ditches and are 10 metres apart, 18 ins. wide at top, 8 ins. at bottom and 16 ins. deep. The cane rows run parallel to the main ditches, and are usually 5 ft. centre to centre.

From the laterals water is thrown on the stools of cane by hand from buckets or long-handled dippers, and less frequently the water is caused to back up in the laterals and then to flow down the rows, or again, after the laterals are filled, water may be allowed to reach the roots by means of seepage. At planting the cane is irrigated every three or four days for a month. In the second month an irrigation is given every five to six days, every ten days in the third month, and every fifteen days for the next two or three months, when irrigation stops, and drains are laid out across the fields.

British India.[7]—Irrigation is general wherever the cane is grown in India. The land is usually watered before planting, after which irrigations follow at first every five days and afterwards every eight days. The water is obtained from wells or from the State-controlled schemes. The system used is one of furrow irrigation, differing in method in no way from those already described.

Quantity of Water used in Irrigation.—In experiments made in Java, Van der Heide[8] concluded that 0·360 litre per second per bouw, or 0·0072 cubic foot per acre per second was required for cane irrigation. This quantity is equivalent to a flow of 560,000 gallons per day per 100 acres, or to 62 inches per year, but, as irrigation only obtains from April to November, the actual quantity of water used is about 36 inches. For an actual irrigation at planting in Java, Mussenbroek[8] estimates that 524 cubic metres are required for a bouw, and for a watering afterwards 105 cubic metres. These quantities are equivalent to 10,570 and 214 c. ft. per acre, or to 2·9 and 0·6 inches respectively.

As compared with these quantities, O'Shaughnessy[9] gives 1,000,000 U.S. gallons per day as required for the complete irrigation of 100 acres in Hawaii. This quantity is equivalent to 134 inches, and does not include the 50 inches of rain that may be expected to fall in a season of eighteen months during which the cane will receive 22,800 tons of water and will produce from 50 to 80 tons of cane. Of this quantity O'Shaughnessy estimates that only one-third reaches the area of the cane roots, due to leaky reservoirs, ditches, and careless application, but since this estimate was made much more careful conservation is practised.

In Egypt, Tiemann[4] estimates that for each irrigation 1,000 cubic metres are required for a hectare, equivalent to 14,300 c. ft. per acre, or to 3·6 inches.

At Poona, in British India, Mollison[10] estimates that the cane over a crop season receives 75 to 80 inches of water in twenty-eight applications, together with some 30 inches of rain.

The data following are based on a report by Maxwell[11] dealing with experimental work on the irrigation of the cane in Hawaii.

During a period of growth of about 17 months the total water supplied to the crop averages about 100 inches. Reference to the table below will show that the young cane received less water than when more mature, but not so much less as might be thought proportionate considering the different states of young and of mature cane. The causes at work are twofold: when the cane is young the whole ground is exposed to the direct rays of the sun and to the action of winds; when the cane is older the foliage shades the ground and lessens loss due to evaporation, and to a large extent conserves water in the soil. At twelve months of age the crop actually consumes in its economy ten times as much water as a crop one month old, but owing to the causes mentioned above the apparent consumption is much less disproportionate.

It was found by experiment in Hawaii that the best results were obtained when the young cane received 0·5 inch per week; less favourable results were obtained when the water supplied was one inch per week, and when the furrows were filled with water the cane came up yellow and sickly. As the cane comes away it requires about one inch weekly up to three or four months, after which 1·5 inches are necessary until the crop is in full vigour, when three inches and never more are required. These figures refer to natural and artificial supplies combined. The reports quoted above give as a general figure that 1,000 lbs. of water are required per lb. of sugar produced, and mention that certain plantations in Hawaii use much more water than the quantities cited with less favourable results.

PLATE XI.

Irrigating Sugar Cane Seed in Hawaii.

TABLE GIVING WATER USED IN PRODUCTION OF A CANE CROP.

Period of Application.	Monthly Rainfall. inches.	Irrigation Water Monthly. inches.
July	0·94	4·0
August	1·58	4·0
September	0·88	4·0
October	1·75	3·0
November	1·32	3·0
December	1·86	2·0
January	1·00	4·0
February	3·75	1·5
March	3·98	3·0
April	0·85	4·0
May	2·01	4·0
June	0·88	7·0
July	0·17	7·0
August	1·90	9·0
September	0·75	8·0
October	2·92	6·0
November	0·47	3·0
	27·01	76·5

The consumption of water per lb. of sugar produced was :—

Crop.	Water per acre. lbs.	Sugar per acre. lbs.	Water per lb. of sugar.
1897–98	25,333,000	24,725	1023
1898–99	27,885,900	29,059	959

Water transpired by Cane.—Maxwell[11] found as the result of experiment that, when cane was grown in tubs, in seven months 79,310 grms., or 174·5 lbs. of water, were transpired by the plant, there being formed 568·9 grms. of water-free material, consisting of 31·8 grms roots, 53·9 grms. stems, and 483·2 grms. leaves, or 147·8 lbs. water per lb. of water-free plant material. The amount of water transpired in each month of growth was found to be as in the annexed table :—

Time of Observation.	Age of Cane. Months.	Transpiration. Grms.	Time of Observation.	Age of Cane. Months.	Transpiration. Grms.
May	1	860	August	4	19,800
June	2	6,500	September	5	20,050
July	3	11,000	October	6	21,100

Experiments due to Kammerling[12] in Java showed that on an average one stalk of cane by its leaves transpired over its whole period of growth 250 c.c. per day ; this he estimates as equal to 3,500,000 litres per bouw over the whole vegetative period, or equal to about 1,600 tons per acre.

During the first month of drought in Java, Kammerling estimates the transpiration per stalk as 500 c.c. per day, and using this as a basis he reckons that the replacing of the soil water thus transpired in a month requires 720,000 litres per bouw, or about 330 tons per acre.

Kammerling also observed that the transpiration of the Manila, Cheribon and Muntok canes was as 5 : 4 : 3 ; i.e., the latter will remain in vegetative vigour on the soil water longer than the former, and will be drought-resisting.

Optimum Quantity of Water in Soil.—Water exists in soils in three conditions : as hygroscopic water, as capillary water, and as gravitational water, that is to say as water in excess of that which can be absorbed by capillarity. Hygroscopic water is not usually available for plant use, and gravitational water is injurious to all except a few specialized plants. Generally normal vegetative growth occurs between the limits where the hygroscopic water ends and the gravitational water begins, that is to say when a soil contains only hygroscopical water and a little capillary water the plant will wilt, and when gravitational water is present normal growth is checked. Experiment has shown that usually plants will make their maximum growth when the maximum quantity of water is present that can be absorbed by capillary attraction. The actual percentage of water in a soil corresponding to this condition varies within wide limits; thus in sandy soils the hygroscopic water is about 2 per cent., rising to 10 per cent. in clays, and to 40 per cent. in peats; the actual water content for the best results will be least in sandy and most in peaty soils. This feature of irrigation has been studied to some extent by Eckart[13] and more recently by Burgess.[14] The latter calls attention to the very hygroscopic nature of Hawaiian soils due to the presence in large amounts of colloidal silica, ferric oxide, alumina and humus, and he estimates that soils such as these are in the optimum condition when they contain about 45 per cent. of water. Eckart, experimenting on the soils of the Experiment Station in Honolulu, found that the best results were obtained with an irrigation of three inches per week, the soil then containing on an average 31·38 per cent. of water. As this soil could absorb 40·74 per cent. of water, the optimum percentage would occur when it was saturated to 77 per cent. of its capacity, a figure higher than is found with most crops.

Quality of Irrigation Water.—Maxwell[11] arbitrarily fixed the "danger point" of irrigation water at 100 grains of salt per imperial gallon; Hilgard[15] states that 40 grains is the usual limit. Eckart[16] found cane in lysimeters grew unchecked when the soil water contained 195 grains chlorine, as sodium chloride, per U.S. gallon, and obtained in lysimeters a normal growth when irrigation water containing 200 grains of salt per gallon was used in excess, at the same time permitting good drainage from the porous soil employed in the tests. He also found that gypsum and coral sand mitigated the harmful effect of saline irrigation waters.[17]

The nature of the salt in the water has a profound effect; sulphates or carbonates of lime and magnesia are not harmful; it is in the chlorides of the alkalis that danger lies. The danger of such water lies in their abuse rather than in their use; if the soils to which they are applied are ill-drained so that the salt can accumulate, the quantity soon becomes toxic; combined with natural rainfall, applications of a purer supply or heavy applications of the saline water, together with good drainage so as to wash out the accumulated salt, permit their safe use.

Conservation of Soil Water.—After the water has arrived in the soil a great part is always lost by evaporation, and this is capable of control within certain limits. A protective layer of soil in fine tilth prevents the upward movement of the water by capillary attraction to the surface, and is highly efficient in retaining water in the soil. Not less important is the nature of soil; soils containing much humus are especially water-retentive, and this is capable of control by burying the trash of the cane and by ploughing in green manure; to a certain extent the benefits of these practices may be attributed to the increased water-holding capacity of soils treated in this way.

The velocity and flow of the wind are also of importance in determining the evaporation from the soil, and loss in this way may be controlled by planting wind-breaks or belts of trees.

Another factor of very great importance is the humidity; Eckart[11] has shown that this entirely masks the effect of temperature, so much so that a rise in humidity of 12·5 per cent. decreased the evaporation 50 per cent., although the temperature rose 1·5° Fahrenheit.

Cost of Irrigation.—The cost of irrigation as practised in the Hawaiian Islands is very great, and at the same time very variable with varying local conditions. The cost divides itself naturally into two parts, the cost of furnishing water and the cost of applying it to the field. On those plantations which have irrigation schemes tapping upland supplies the level of the field does not affect the cost, but where the water is pumped the cost rises proportionately to the height to which the water has to be elevated. The cost of lifting 1,000,000 U.S. gallons one foot is roughly 0·09 cent, with fuel oil costing 0·8 cent per lb., included herein being interest, depreciation and labour. This amounts to $24·56 for 100 acre-inches lifted to a height of 100 feet. The cost of water from ditch systems is considerably less; one ditch company there supplies water at the rate of $2,500 per year per 1,000,000 gallons per day, a figure amounting to $18·79 per 100 acre-inches. A very similar figure is charged in Porto Rico by a Government-owned scheme supplying water in the southern portion of the territory. Here the cost is $2·50 to $3·00 per acre-foot, or $20·82 to $25·00 per 100 acre-inches.

The actual recorded costs of irrigation in the Hawaiian Islands for the year 1914 are given below.[18] These data refer to plantations entirely dependent on irrigation, each field receiving water on an average probably never less than once in every ten days. The variations in cost are due to differences in level, and to the difference between pumping and gravity supplies.

IRRIGATION COST PER ACRE AND PER TON OF CANE, CROP OF 1914.

Items.	Plantations included.	Cost per acre. $	Cost per ton of cane. $	Per cent. labour of total cost.
Pump expense	12	21·31	0·3984	20·62
Pump repairs	10	2·81	0·0529	49·01
Pipe-line expense	13	0·36	0·0075	57·40
Reservoir expense	16	0·50	0·0104	68·94
Irrigation-flume expense	12	0·51	0·0090	46·65
Ditch expense	14	6·27	0·1317	64·74
Water purchased	16	7·89	0·1706	0·33
Irrigating	24	40·11	0·8388	87·78
Average (24 plantations)	24	67·91	1·4198	62·97

Cost of Irrigation per Acre, per Ton of Cane, and per Ton of Sugar, and Production per Acre, by Plantations.

Plantation.	Cost of Irrigation.			Production per acre.	
	Per acre. $	Per ton of cane. $	Per ton of sugar. $	Tons of cane.	Tons of sugar.
No. 1	22·44	0·49	4·16	45·6	5·4
No. 2	99·89	1·72	11·75	58·2	8·5
No. 3	69·83	1·35	10·01	51·7	6·9
No. 4	34·13	0·57	5·11	59·4	6·7
No. 5	63·77	1·22	9·11	52·2	7·0
No. 6	46·06	0·99	8·14	49·8	6·0
No. 7	100·28	1·66	11·94	60·3	8·4
No. 8	26·23	0·71	7·01	36·8	3·7
No. 9	74·28	1·55	10·94	48·1	6·8
No. 10	113·15	2·18	14·90	51·9	7·5
No. 11	71·37	1·47	12·72	48·6	5·6
No. 12	86·85	1·35	11·81	64·2	7·4
No. 13	85·27	1·30	11·32	65·8	7·5
No. 14	88·65	2·03	15·28	43·7	5·8
Average	70·15	1·33	10·32	52·3	6·6

REFERENCES IN CHAPTER VII

1. "Soils," New York, 1906.
2. U.S. Dept. of Commerce, Miscellaneous Series, 53.
3. From a copy of an unpublished report.
4. *Int. Sug. Jour.*, 1903, 5, 64.
5. De Cultuur van het Suikerriet op Java.
6. *Trans. Am. Soc. Civ. Eng.*, 1905, 54C, 40.
7. Dictionary of the Commercial Products of India.
8. Java *Arch.*, 1894, 2, 833.
9. *Trans. Am. Soc. Civ. Eng.*, 1905, 54C, 129.
10. *Agricultural Ledger*, 1898, 8.
11. U.S. Dept. of Agric., Office of Ex. Sta., Bull. 90.
12. Proceedings, Fourth Congress, United Syndicate of Java Sugar Manufacturers, 1904.
13. H.S.P.A. Ex. Sta., Agric. Ser., Bull. 9.
14. H.S.P.A. Ex. Sta., Agric. Ser., Bull. 48.
15. "Soils."
16. H.S.P.A. Ex. Sta. Agric. Ser., Bull. 8.
17. H.S.P.A. Ex. Sta. Agric. Ser., Bull. 11.
18. U.S. Dept. of Commerce, Miscellaneous Series, 53.

FOWLER STEAM PLOUGH OUTFIT.

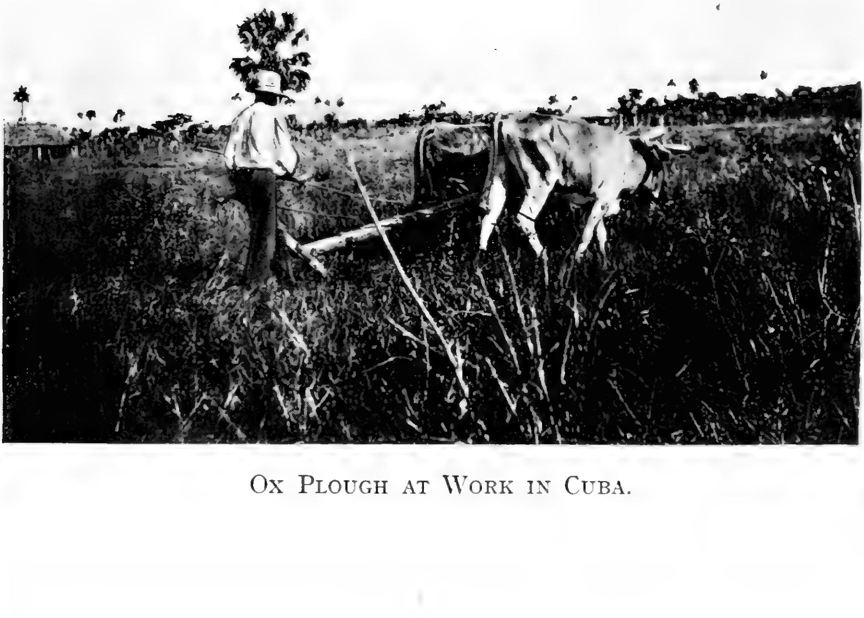

OX PLOUGH AT WORK IN CUBA.

PLATE XIII.

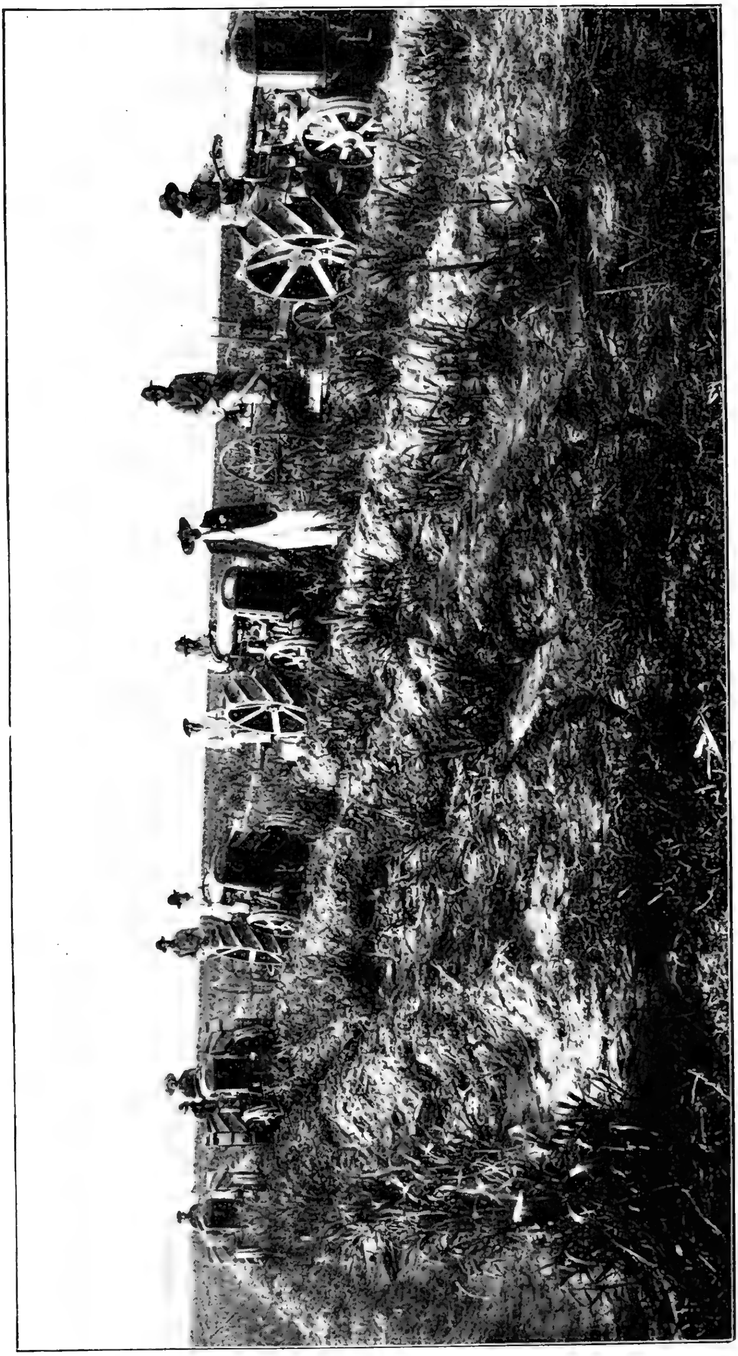

FORDSON MOTOR TRACTORS AT WORK IN TUCUMAN.

CHAPTER VIII

THE HUSBANDRY OF THE CANE

THE cane is grown under so many diverse conditions that no general sketch of its husbandry is possible. An attempt is made in this chapter to give some short notice of the implements employed and the routine of operation in the more important districts. Broadly speaking, the districts where the cane forms a staple fall into two classes: those where the cultivation is chiefly manual, and those where animal or power-operated implements are used. The former methods are mainly employed in the presence of a cheap supply of labour of Asiatic or African origin, but the physical conditions of the district have also a large influence.

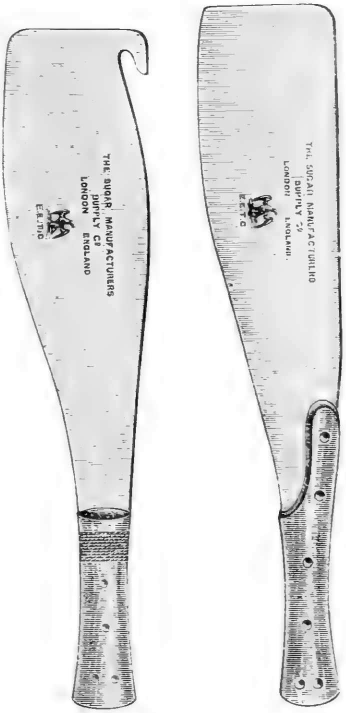

FIG. 23

The manual implements used in the cultivation of the cane are the hoe, the fork, the shovel, and the cutlass. The cutlass, two forms of which are shown in *Fig.* 23, is used in the British West Indies as a weeding tool. In other districts this work is done with the hoe, two forms of which are shown in *Fig.* 24; the short-handled hoe is used in Mauritius, and the long-handled form in Demerara. Besides being used to cut down weeds, it is employed to hoe earth over the rows of cane and to make the cane furrow, while in Mauritius it is also employed in making the holes in which the cane is planted. The native Javanese hoe or *patjol* is a short-handled tool with long and narrow blade, intermediate between a pick and a hoe. The fork, *Fig.* 25, is employed in Demerara in the cultivation of the cane when *forking banks*, i.e., turning over with the fork the soil between the rows of cane. The shovel, *Fig.* 26, is used in Demerara in preparing the seed bed, and in digging drains.

With few exceptions the same implements that are employed in the husbandry of other plants find use with the cane; these include steam, gang ploughs, turn or mould-board, shovel, and disc ploughs, harrows, tongue and disc cultivators. In this connection it is of interest to note that so long ago as 1848 Wray in the "Practical Sugar Planter" advocated the use of steam ploughs and of cultivators; he illustrated a turn plough operated by one engine on the cable and anchor system ; the horse hoes and cultivators that he showed (and the use of which he strongly advocated) differed but in detail from those in use at the present time. His remarks on the use of these instruments are as true to-day as they were three generations back, and are therefore quoted below:—

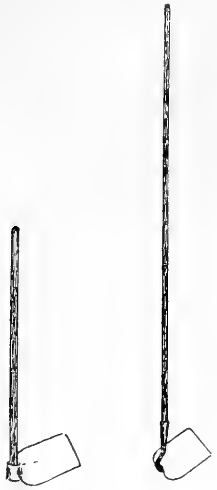
FIG. 24


FIG. 25


FIG. 26

> "The hoe plough is the next instrument particularly deserving of attention ; it is one of the most useful that the planter can employ. This plough is used for the purpose of hoeing up weeds and loosening the earth between the growing plants. It is provided with two wheels, one in front of, and one behind the hoes, by means of which the depth of the hoeing is regulated. It may be used with three triangular hoes, each cutting 13½ inches wide, extending over 3 feet 6 inches of ground, or contracted to a smaller width ; or the two hind hoes may be replaced by two curved knives for cutting the weeds up on the sides of the ridges. It is an implement of very simple construction and in great use in England ; it is also one that will be found of very great advantage on sugar estates, in cleaning between the cane rows, and in loosening the soil about the plants. The expanding horse hoe is an implement designed and manufactured expressly for the colonies, and is already beginning to establish for itself a very sure reputation amongst sugar planters. By means of a very simple contrivance, it can be extended and contracted at pleasure ; so that the planter can have it made to expand even to 5½ or 6 feet, if he requires it, as he will in all cases where he plants his canes at six feet apart ; whilst at the same time, by having spare tines or shares of peculiar form, he can vary the nature of the work to be performed by it. For instance, the instrument is suited for rooting up weeds and loosening the soil between the rows of canes ; by taking off the tines and hoes and replacing them with light moulding shares, the instrument is at once converted into a moulding machine, whereby the young canes may receive two or three successive mouldings as lightly and neatly as by hand labour. I consider this machine to be so valuable to the planter that no sugar estate should be unprovided with it ; it enables him to perform at a very inconsiderable cost an amount of work which, when executed by hand labour, is well known to be very tiresome and expensive."

Systems of Mechanical Tillage.—In mechanical tillage two distinct systems are in use. In one, invented by John Fowler, in the first half of the nineteenth century, the implement employed is drawn across the field by means of a cable. Usually two engines located on opposite sides of the field are used ; on each engine is a winding drum, which alternately pays out or winds in cable, thus drawing the implement across the field. With this system balanced ploughs with a double gang of shares are used, one set being tilted in the air while the other is buried in the ground. This system, which is illustrated in *Plate* XII, has been, and continues to be, very largely used in the Hawaiian Islands, in Peru, and to a less extent in Cuba.

In the second system, the implement is hitched behind the tractor and drawn across the field. Steam tractors have been used for this work, but the system has only become extensively used with the development of the gasoline or petrol tractor. Two types of tractors are found, the wheel tractor and the caterpillar or track-laying tractor. An illustration of the former type is shown on *Plate* XIII. At the other extreme is to be found the animal-drawn implement still in general use in Cuba, Java, and the Philippines, and in other localities occasionally where peculiarities of certain fields may prohibit the use of the more economical power plants. *Plate* XII shows a yoke of oxen at work in Cuba in the preparation of land for planting.

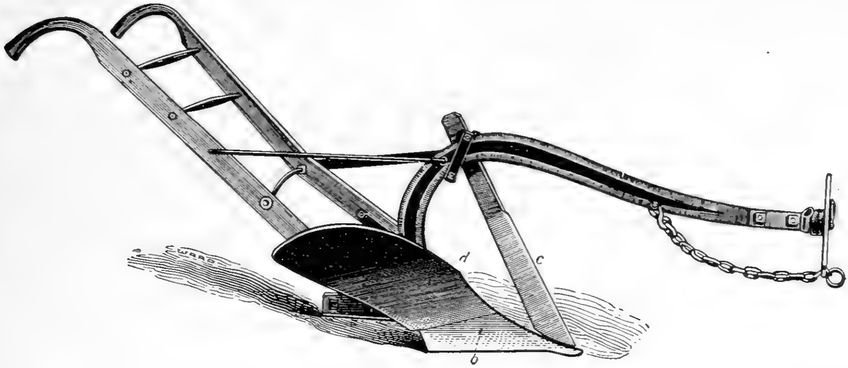

FIG. 27

The area of land ploughed by these devices in a given time varies both with the nature of the soil and with the depth ploughed. Cable-drawn steam ploughs operated at a depth of 14–16 inches will, in lands of normal stiffness, take one hour to plough an acre, the area increasing as the depth decreases. The motor-drawn paraffin tractors, ploughing only to a depth of 4–6 inches, will, under similar conditions, plough an acre an hour. At the other extreme is the ox-drawn Cuban plough which has a capacity of only one acre in nine hours ploughed to a depth of not more than four inches.

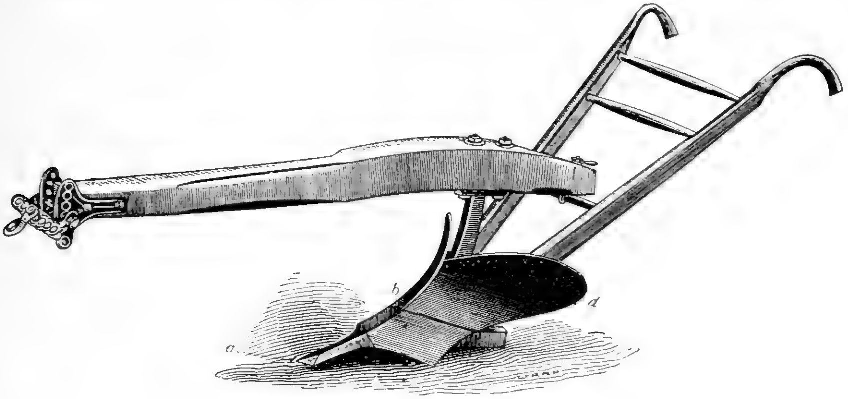

FIG. 28

The Implements used.—Generally the implements used in cane culture differ in no ways from those employed in other agricultural industries. Some of these, together with types specialized for use with the sugar cane, are described below.

Ploughs.—The primitive type of plough which has come down from very early times still survives in use in Java, in the Philippines, and in Cuba, in all of which countries, however, it is fast disappearing.

Turn, or Mould-Board Ploughs.—Turn, or mould-board ploughs are so called because they cut from the soil a clean slice and turn it over top side down, through the action of the mould-board; the single mould-board plough is shown in *Fig.* 27; *a* is the share, *b* the landslide, *c* the coulter, and *d* the mould-board or breast. The coulter shown is of the knife type; it may be replaced by a rolling coulter, consisting of a revolving steel disc, and, instead of being hung from the beam it may be bolted on to the share or may be entirely absent. This type of plough is the instrument that is almost always used in the preparation of land for planting crops of any kind the plough may be a single unit, or there may be a number of units forming a *gang plough.* The double mould-board plough is shown in *Fig.* 28, the lettering being as for the single mould-board plough. This plough throws a slice of earth on either side of the share, and finds an extended use in the

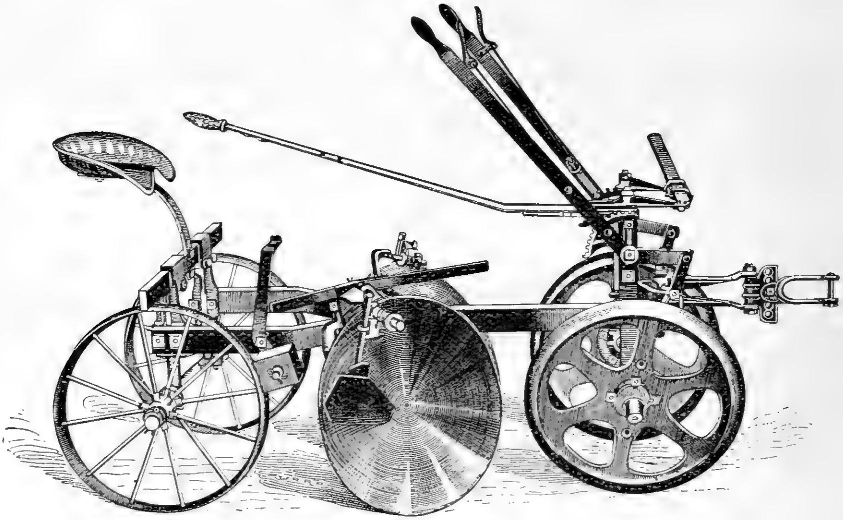

FIG. 29

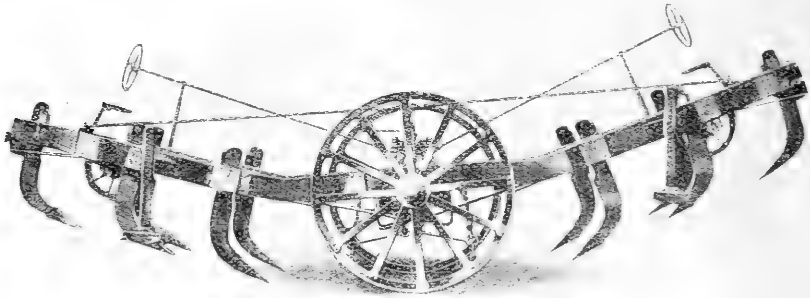

FIG. 30

sugar industry in forming the furrows in which the cane is planted, in opening irrigation channels, in "bursting out" the middle of the cane rows, and in turning over weeds between the rows in young canes.

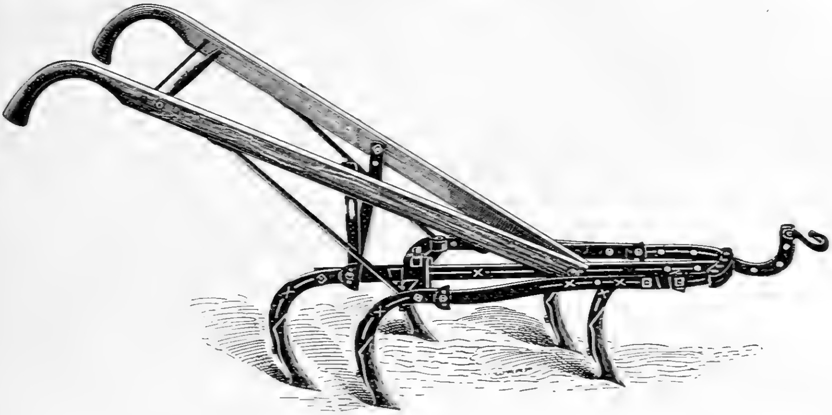

FIG. 31

Disc Ploughs.—The essential part of the disc plough (*Fig.* 29) is the revolving discs; these are of concave shape and revolve about their centre, the slice of soil being turned over by the action of the concavity of the disc.

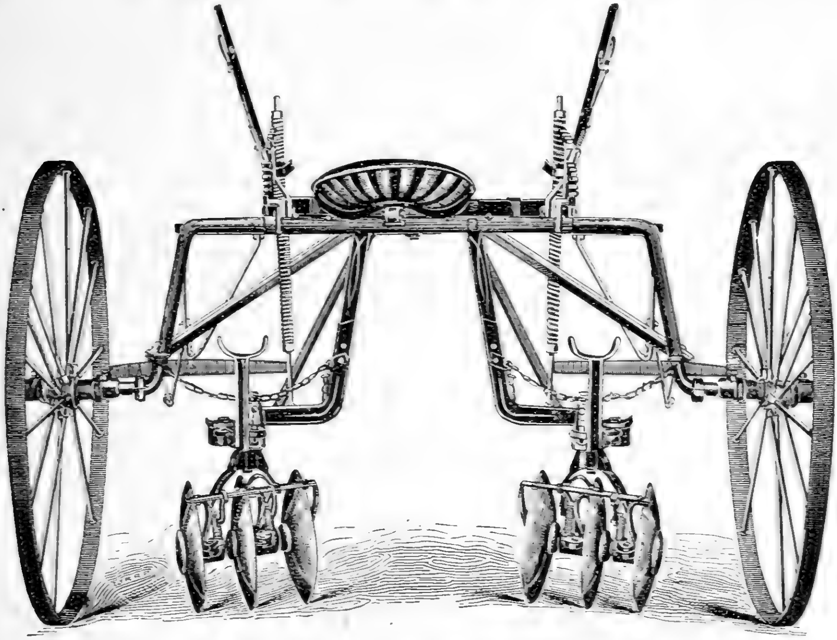

FIG. 32

The disc principle was originally devised to lessen the draft on the plough, and these ploughs find use in tenacious soils, where the mould-board plough will not scour properly, and in very hard lands where it is not possible to use the latter plough. In open loose soils the disc ploughs are inferior to the other type. By the use of two discs inclined towards each other, they may be used for furrowing, and they also find one of their most extended uses in turning over and burying the pea vines grown as a green manure.

Knife Plough.—*Fig.* 30 shows an implement used to some extent in the Hawaiian Islands as a substitute for the ordinary turn plough. It is used in connection with steam tackles in preparing the land for planting, and does not turn over the soil or make a furrow. Its action is to break up and loosen the soil to a depth of about two feet.

The Cultivator.—The cultivator, which has developed from the shovel plough or horse hoe, is shown in *Fig.* 31. In cane fields this instrument is drawn by animal power between the rows of cane, breaking up the soil and destroying the weeds. The disc cultivator is shown in *Fig.* 32. It is built to *straddle* the row, the discs being set to throw dirt on the row. These instruments can only be used on young cane, and when the crop is too far advanced to permit their use it is said to be laid by.

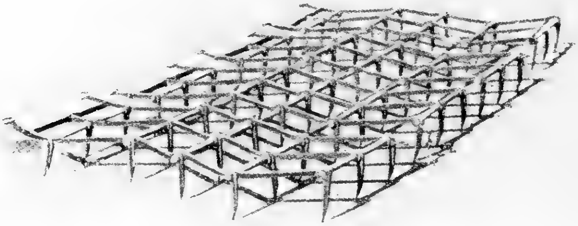

FIG. 33

The Harrow.—This implement, a form of which is shown in *Fig.* 33, is used after ploughing and before making the furrow to break up the clods of earth. The action of the harrow may be supplemented by the use of rollers. The principle of the disc has also been applied to the harrow, and a form of disc harrow is shown on *Plate* XIV. This appliance is used in the Hawaiian Islands to cut up cane trash and green manures before turning them under with the plough.

Special Cane Implements.—In *Figs.* 34, 35 and 36 is shown the Benicia-Horner No. 1 Ratoon and Cane Disc plough, which has found an extended use in the Hawaiian Islands. It contains in detachable parts a double mould-board plough, a revolving knife, right and left-hand discs, and a sub-soil plough ; it may be used as a furrower, either for planting or for irrigation, for bursting out middles, as a cultivator for throwing soil on to the cane row or with the object of hilling up the latter, for trimming and subsoiling the sides of the cane row, and slicing and cutting the ratoon row.

When used as a furrower (*Fig.* 36) for planting or irrigation, the implement is equipped with both right and left-hand discs, with the double mould plough and with the subsoiler ; when used to slice up ratoon cane (*Fig.* 35) the plough is replaced by a revolving knife ; when used for hilling up rows of cane (*Fig.* 34) the revolving knives and discs alone are used, the subsoiler being detached.

In *Fig.* 37 is shown the Horner combined weeder, cultivator and harrow, intended to be used where the growth of grass is very rank. It was originally designed to be used with the *hona-hona* (*Commelina nudiflora*) grass of the Hawaiian Islands ; the semicircular teeth tear up the weeds and at the same time cultivate the soil. The load of weeds gathered in the cradle can be discharged by lifting up the handles of the implement.

Spaulding Deep-tilling Plough.—This implement (*Plate* XIV) is used to an increasing extent in the Hawaiian Islands in turning under cane trash. In operation the front disc takes off a slice of soil, turning it into the bottom of the previous furrow. The second disc operating about four inches inside the track of the other on a space cleared of cane stumps and grass by the first disc has no difficulty in effectively turning over and burying a slice of the soil along with the cane trash.

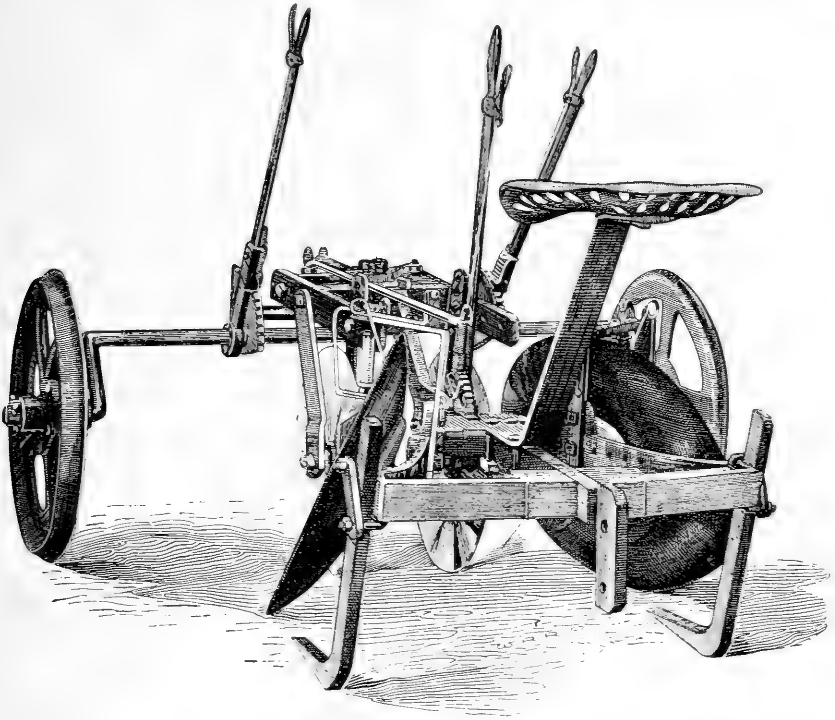

FIG. 34

Stubble Digger.—This implement, *Fig.* 38, is mainly confined to Louisiana. It consists of a rotary shaft, on which are fitted blades arranged about a helix. When the carriage is drawn along the rows of ratoon cane, the knives revolve and break up and pulverize the soil.

Stubble Shaver.—This instrument, *Fig.* 39, the use of which is also confined to Louisiana, is used to cut down cane stumps flush with the ground. Its essential mechanism is a horizontal circular knife, which rotates as the carriage is drawn along.

Preparation of the Land.—Although the greater part of the cane sugar yearly produced is manufactured from cane grown on land that has been in cultivation for a number of years, and in many sugar-producing countries all available land is under cultivation, in some other countries virgin land is still taken in, or old abandoned land that has fallowed for a number of years and returned to its primitive condition is again put under cultivation. In general, the operations to be undertaken in putting in new land may be briefly described as under:—The land is cleared of all trees and bush, the heavy wood is put on one side to be used as fuel, or, if valuable, for export, the small branches, leaves and bushes being burnt *in situ*. Very generally all this work is done by hand, and the cost, especially if heavy stones (as is often the case in volcanic countries) have to be moved, is very great. The more modern and economical method is to employ steam power; engines capable of use either as traction or stationary units are employed in many

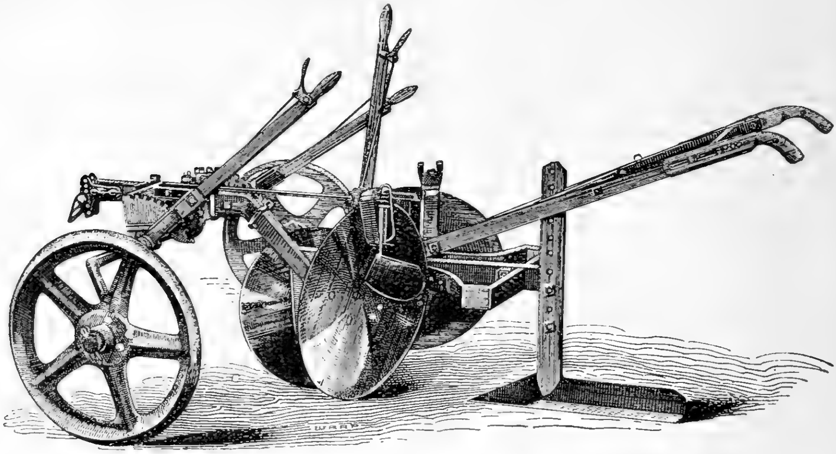

FIG. 35

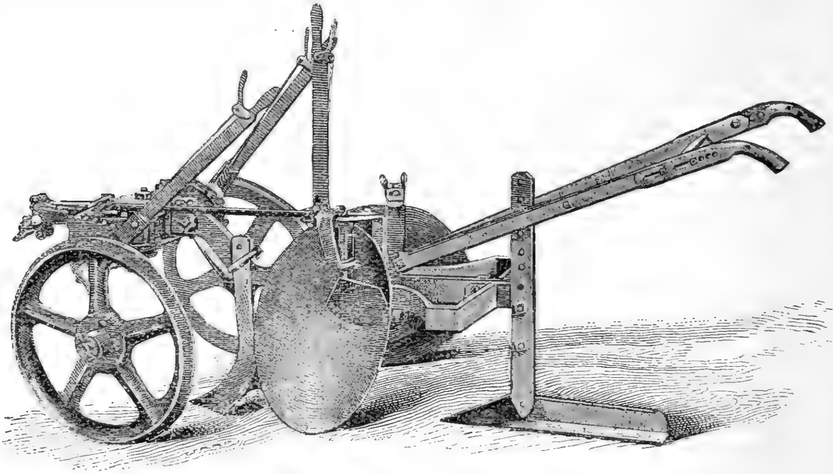

FIG. 36

PLATE XIV.

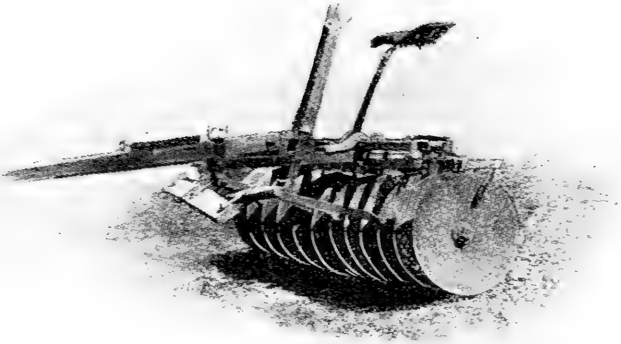

DISC HARROW

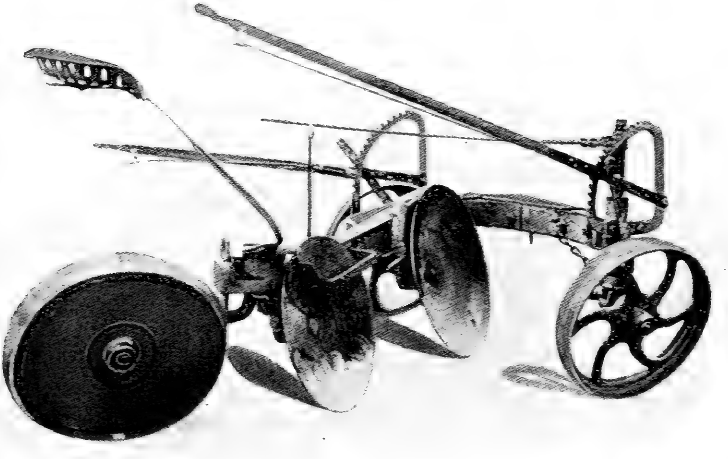

SPAULDING DEEP TILLING PLOUGH.

PLATE XV.

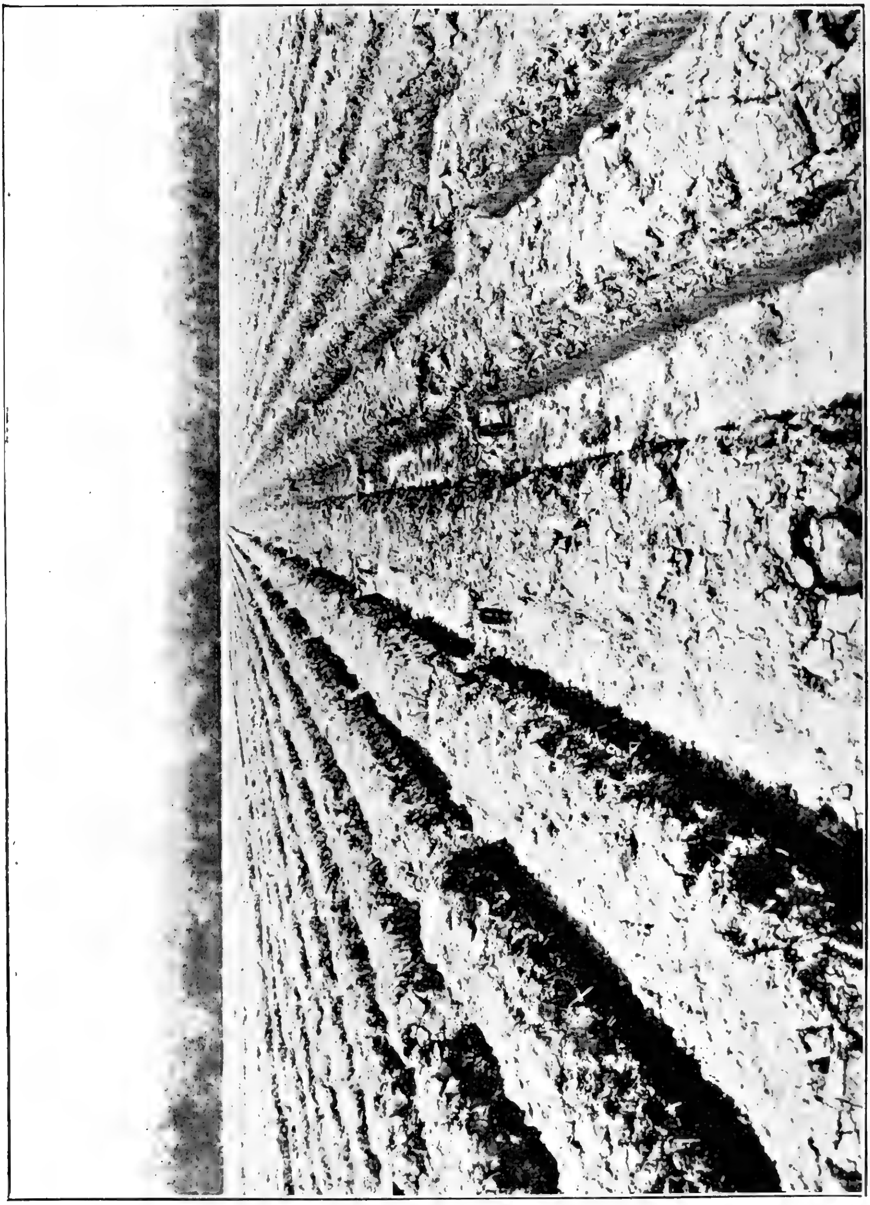

A JAVA CANE FIELD READY FOR PLANTING.

countries for the purpose of hauling the heavy timber and large stones off the land; when new districts are opened up or when new land is continually taken in, such a process is almost essential.

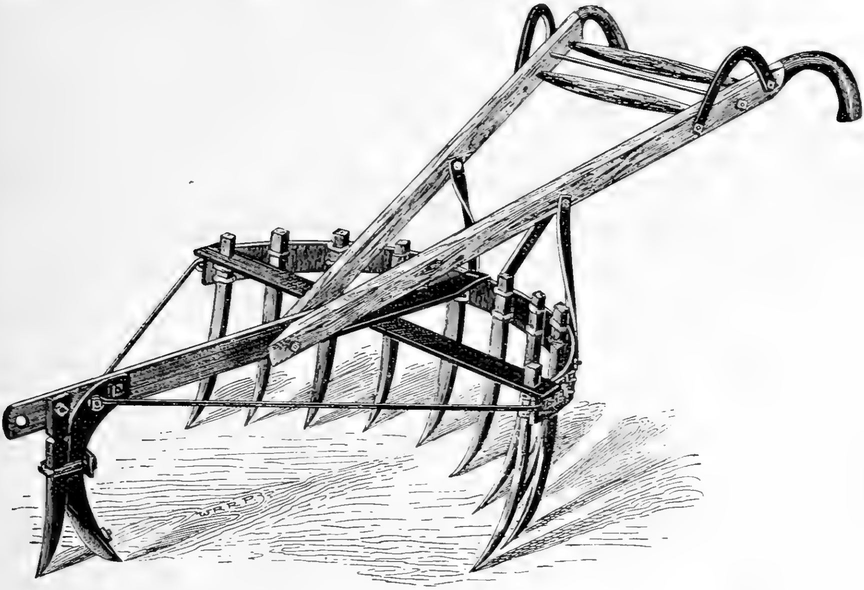

FIG. 37

The combustion of the vegetation on new land is from one point of view entirely wrong, for the practice robs the soil of most of the nitrogen that has been accumulating for ages past; but the expense of burying the vegetable matter, the slowness of its decomposition, and the harbouring places it affords for noxious insects are the reasons brought forward for maintaining this

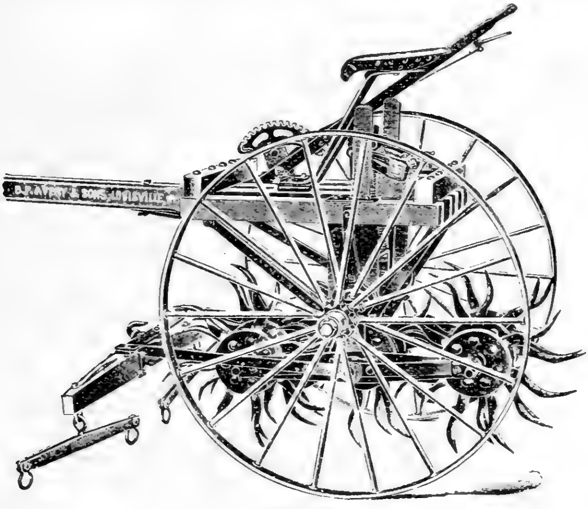

FIG. 38

practice; in addition, the burning of the vegetable matter places in the soil a large amount of readily available mineral plant food.

After the land has been cleared in those countries which employ land carriage, roads wide enough for carts to pass are made through the new sections, and the area divided up into convenient fields; the land is prepared for cultivation by ploughing, either by manual, animal or steam power. When hand labour is employed, the soil is merely turned over by forks or shovels; in other cases the whole area is ploughed, cross-ploughed and horse-hoed, and the soil properly broken up and aerated.

British Guiana.—In British Guiana and the Straits Settlements, which are flat alluvial countries, a somewhat more complicated procedure is necessary. The area of the new plantation being decided, three dams formed by the excavation of three trenches are thrown up; these dams are known as the navigation or middle walk, sideline or drainage, and back dams; and they enclose the piece of land which is to be put into cultivation. More frequently, however, a double section is formed with two sideline dams and a back dam as empoldering dams, a navigation dam running in the centre of the two half-sections, and serving equally for both. In *Figs.* 40 and 41 are given plans of the arrangements of field customary in British Guiana; *a* is the navigation dam formed by the excavation of the navigation trench *b*; the navigation trench continues up to the factory, and is used for the transport of cane and produce, and also to supply water for irrigation and other purposes. This canal is connected with a river, creek or lake; or, where this is impossible, a large canal capable of supplying a batch of estates carries water from a river. Many estates have pumping stations situated on a river, so that they are nearly independent of drought; on other estates a drought may cause the level of water in the river or creek to fall so much that it is necessary to take sea water into the trenches. At *e* are shown cross canals communicating with the navigation trench, and terminating about 20 to 25 feet from the sideline or drainage canal *c*; the cross canals are used for the purpose of bringing the punts or barges used for transport within access of the canes; the main drainage canal runs out to the sea or river. Drainage is either forced or natural; in the former case centrifugal or sluice wheel pumps are employed, the first-named being by far the most economical; in the latter

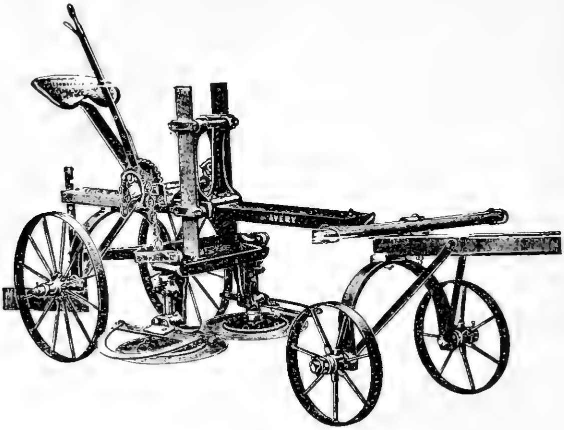

FIG. 39

case the sideline discharges at low tide into the sea or river. Between the cross canals lie the fields, usually of area 10 to 20 acres, the distance from cross canal to cross canal being about 500 feet. In Demerara two kinds of fields are distinguished: Dutch fields, *Fig.* 40, and English fields, *Fig.* 41. In the Dutch form the fields are divided into beds 35 feet wide, running parallel to the navigation trench; running down the centre of each field is the drain *f* known as a *tracker* or *four-foot*, which communicates with the main drainage trench; between each bed are small drains *i*, which discharge into the four-foot. In the English fields the beds *d* run at right angles to the navigation trench. There is usually one bed *g*, called the dam bed, running parallel. In front of the dam bed is a cross tracker *h*, and between the beds are the small drains *i*. Through the centre of the field runs, as before, the four-foot *f*. The drains *i* discharge both into the cross tracker, and thence by *f* into the main drainage trench, and also directly into the main drainage trench;

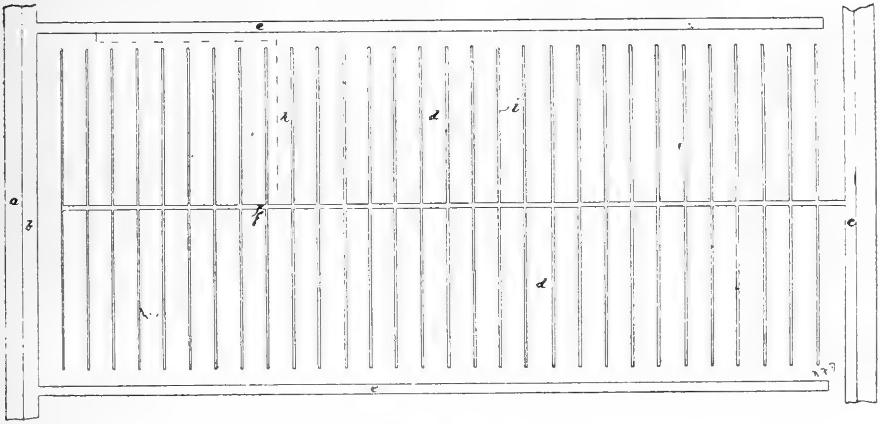

FIG. 40

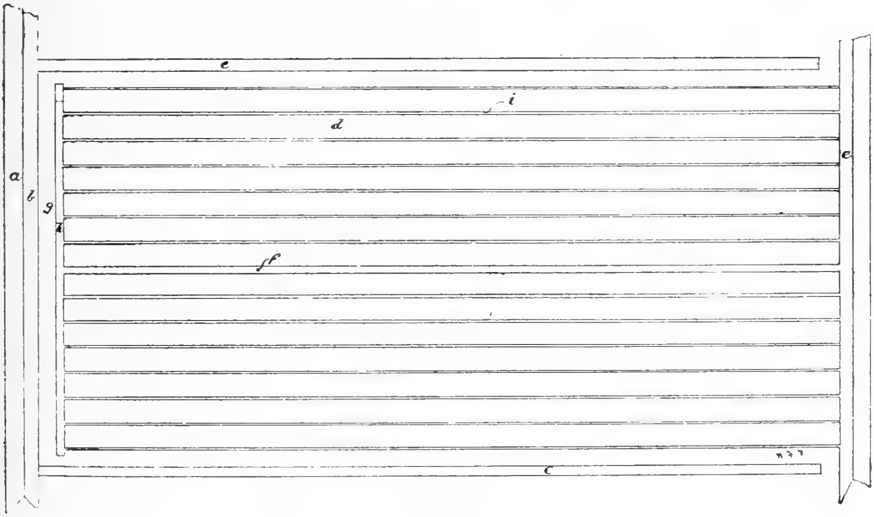

FIG. 41

very often a centre cross tracker is also provided. The dam, called the back dam, is not shown in the sketches. It is the last dam on the estate, and serves to keep out savannah water.

Approximate dimensions customary in Demerara are:—Navigation trench: 16 feet to 20 feet top; 12 feet to 16 feet bottom; 4 feet to 5 feet deep. Cross canals: 12 feet top, 9 feet bottom, 4 feet to 5 feet deep. Small drains: 2 feet to 3 feet top; 1½ feet to 2 feet bottom; 3 feet deep. Larger drains (trackers): 5 feet top, 3 feet bottom, 4 feet deep.

No furrow is formed in the soil, but a seed bed three to four feet wide is made with the shovel, into which the seed cane is pushed in a sloping direction. Between the cane rows is a space about four feet wide called the *bank*; often on very stiff clayey soils a shallow drain known as a *drill*, running parallel with the cane row, is made in this bank.

Louisiana.—In Louisiana, where the sugar lands are flat and alluvial, little, if any, new land is now taken in for sugar-raising purposes. The preparation of the old land is as follows. The soil generally bears a plant and ratoon crop of cane followed by corn; at the last cultivation of the corn the land is sown with cow peas at the rate of from one to three bushels per acre; an immense mass of vegetation is produced which is ploughed in with disc ploughs as a green manure. When the vines have rotted sufficiently, the ridges on which the cane is to be planted are formed with the turn plough; drains are made at right angles to the ridges, these quarter drains leading into larger ditches, and these latter into the main drainage canals.

Cuba.—The sugar lands of Cuba are divided into the older lands of the western half, which have been in cultivation for many years, and the newer lands of the eastern half, where quite recently plantations have been carved out of the virgin forest. In putting new land into cultivation, the larger trees are cut down, hauled off the land and sold for timber if a market can be found. The stumps are left *in situ*. After a dry spell fire is set to the undergrowth and the land thus cleared. No ploughing is attempted, and indeed this would be quite impossible until the tree stumps have rotted away. Cane is planted without any preparation of the soil, holes being formed in the ground with a pick or crowbar. No attempt is made to line out the rows, and the tops are planted as the stumps of the trees best allow. Such land will often afford as many as twenty cuttings from one planting, after which the tree stumps are sufficiently rotted to allow of ploughing and of the ordinary agricultural processes. On the older lands the ground is ploughed after the last crop of ratoons have been taken off, and the cane is planted in furrows in the usual way. The ox-drawn plough is being fast superseded by power-drawn implements.

Hawaii.—Deep and thorough ploughing and good preparation of the soil is a characteristic of this district. A typical routine is as follows:—After the land has carried its last ratoon crop, a plough is run down the middle of the row bursting out and shattering the ratoon rootstocks; the land is then harrowed, ploughed and, perhaps, cross-ploughed. Where the contour of the land permits, steam ploughs, generally Fowler cable-operated balanced ploughs, as shown on *Plate* XII are used; after ploughing, a second harrowing is done, following on which the furrows, and water-courses on irrigated plantations, are made with a double mould-board plough. Fertilizer may then be scattered on the bottom of the furrow and mixed with a subsoil tine cultivator ; usually the application of fertilizer is delayed until after planting. *Plate* XI (page 112) shows a Hawaiian cane field ready for planting.

Mauritius.—For very many years past no new land has been available for cane growing in Mauritius ; an essential feature of the system of cane growing there followed is the well-advised green manuring given the land after the last (generally third) ratoon crop has been taken off. After the land has been for a variable period under the green crop, this is cut down and buried or burnt off ; after lining off the field the holes in which the cane is planted are made with the hoe. The entire preparation of the land is done with very cheap manual labour of East Indian origin.

Java.—The imperative needs of the large native population of Java demand a carefully regulated system of land tenure, and the self-contained plantations found elsewhere are absent from Java. Cane is only planted one year in every three, the land at other times being in the hands of native cultivators ; cane generally follows rice, and a number of small separated areas of rice are united into one cane field, the area of which is from one *bouw* (1·97 acres) to 100 *bouws*, with an average of from 10 to 20 *bouws*.

The first operation is to level the small embankments that have been made in the rice fields, and to separate the terraces and fields belonging to different owners. The rest of the operations are thus described by Prinsen Geerligs[1] :

> " As soon as the rice is reaped, and sometimes during that operation, a deep ditch is dug round the field in order to drain off superfluous water. Owing to the wet rice cultivation the soil has been saturated with water during the previous two or three months, all kinds of reduction processes have taken place and oxygen fails entirely. In order then to render the land fit for cultivation the soil must be exposed to the action of sun and wind. To this end the field is divided by transverse ditches into plots of one-quarter or one-fifth of an acre, and between these ditches the rows in which the cane is to be planted afterwards are dug. Ordinarily these rows are 30 feet long, 1 foot wide, a little over 1 foot deep, and 4 or 5 feet apart. The excavated soil is heaped up between the rows. In some places where the nature of the soil so allows, the land is ploughed first and afterwards the rows are dug with the native spade. When the field is thus prepared it has the aspect of a large number of trenches, which remain exposed to the sun's rays for about six weeks. It is still unknown what chemical action takes place during the drying of the soil, but experience has taught us that this period of lying fallow is indispensable in obtaining a good crop. The wet lumps of soil dry up during this operation, crumble to pieces and assume a lighter colour, causing the mass of moist cold hard lumps to change into a loose greyish powdery soil. During the weathering all grass is carefully weeded out, and this is continued after planting until the cane has grown so high that it keeps down the weeds by its own shadow. At the end of the drying time the soil in the rows is loosened a little and the cane tops are then planted in them."

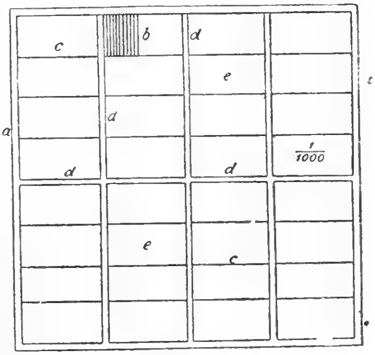

Fig. 42

A ground plan of a Java cane field will then appear as in *Fig.* 42 ; at *a* is a ditch surrounding the field, into which drain the cross ditches, which are in turn fed by the small drains *c* separating the cane beds *e* ; the cane rows are at *b* running across the beds. *Plate* XV (page 125) shows a Javanese field ready for planting.

In the literature of the cane as it relates to Java reference is often made to the Reynoso system. Reynoso was an eminent Cuban agronomist, who published in 1865 a treatise on the agriculture of the sugar cane. This work was translated into Dutch and attracted much attention in Java. Reynoso advocated deep cultivation, thorough tillage, and planting in furrows, as opposed to pushing the cane top in a slanting direction into a level field. The system of deep trenches described above is directly due to Reynoso's influence, and is known in Java as the "Reynoso system," as opposed to the "plough system," in which the land is ploughed to a depth of about six inches with the native plough.

Reynoso, however, nowhere writes of planting in deep trenches, and what is now indicated in Java as the "Reynoso system" goes much further than anything advocated by the learned Cuban agriculturist.

Planting.—The seed cane is usually planted in furrows, made either with the double mould-board plough or with the hoe. These are spaced from four to six feet from centre to centre, and are about two feet deep from top of ridge to bottom of furrow. In Java, as explained above, a deep trench generally takes the place of the furrow, and in Cuba in forest-cleared land no furrow or seed bed is attempted. Usually the cane top is planted at the bottom of the furrow, but in clayey or badly drained soil it may be placed on the top of the ridge, the furrow then acting as a drain. In Demerara no furrow is formed, but the cane is planted in a seed bed formed with the shovel in the centre of the row. In many districts the old method of planting in holes still obtains and is mainly followed in Barbados, Mauritius, and Réunion. Hole planting is also sometimes used in connection with the deep trenches used in Java. The holes are from 15 to 18 inches long and from 8 to 12 inches deep. It is customary to count 3,000 of such holes to an acre.

Amount of Seed Cane required per Acre.—This is, of course, dependent on the number of rows per acre, and whether the seed cane is planted in single or in double lines in the row. In an acre with rows five, six or seven feet from centre to centre, the length of the rows is approximately 8,740, 7,280 and 6,270 feet; taking the cane as weighing eight ounces to the running foot, there will be required 4,370, 3,640 and 3,135 lbs. of cane respectively if the latter is laid in single rows.

Width of Row.—In general it is the fertility of the soil that determines the most economical width of row; in very fertile soil, the rows are placed comparatively far apart to allow freedom of growth to the luxuriant crop, and, conversely, as the soil becomes less productive a narrow row gives more economical results. In practice the cane rows are from 3 to 7 feet wide; in Cuba, according to Reynoso, the standard width is 1·70 metre (5 ft. 6 in.), the rows being the same distance apart. Bonâme gives the average width of the cane row in Guadeloupe as 1·30 to 1·50 metre (4 ft. 2 in. to 4ft. 9in.). The most economical width of row was the subject of enquiry at Audubon Park Experiment Station, where it was found that the narrower the row the greater was the purity of the juice and the yield of cane, but that in very narrow rows the increased yield of cane was barely sufficient to pay for the extra amount of cane required to plant up a field with narrow rows. Stubbs[2] suggests that that width of row which best admits of proper cultivation should be selected, and, following on this argument, five-foot rows have been adopted at Audubon Park.

Source of Seed Cane.—Generally it is the young immature top of the cane that is used as a cutting or as "seed." This scheme is defensible in that this part is of small value in the factory and that it contains besides a large proportion of salts and nitrogenous matter that serve as food for the growing plant until it has developed a root system of its own. This view is supported by a large number of somewhat contradictory experiments made in Java dealing with the effect of manuring on the germination of the eye. The results of these tests in general point to a benefit when the older joints are used as seed and to no effect when the tops are used. The maximum quantity of manure ever necessary appears to be 5 grams of sulphate of ammonia per plant, or about 35 lbs. per acre.

When the harvest and planting take place at the same period there will always be a supply of seed cane available, but when, as is often the case, these periods are separated, special means must be taken to obtain cuttings. In Cuba it is customary to leave a certain portion of the crop uncut to supply seed for the planting that takes place after the termination of the harvest at the mid-year. In this case the whole stalk of mature cane is utilized. A second scheme to obtain a supply of tops independent of the harvest is to "draw down" young cane of about six months' age, and also in this case to use the whole stalk. In Java the growing of cane for seed has developed into an industry independent of the plantations proper. There it has been found that mountain-grown seed is less liable to attacks of *sereh* than is seed obtained from cane grown on the lowland plantations. Accordingly cane is first planted at an elevation of 5,000 to 6,000 feet in "grandmother fields." After six months' growth selected disease-free stools are dug up and transplanted to "mother fields," at an elevation of 2,000 to 2,500 feet. This process is repeated, and selected stools are next transplanted to "daughter" or "export fields" at 1,000 to 1,200 feet elevation. After seven or eight months' growth here the crop is cut down and used for seed on the plantations, either directly for cane or in the establishment of a lowland nursery.

In the Hawaiian Islands the formation of seed from growing cane is often forced during the harvest time. If, after flowering, the top of the cane be cut off, the upper joints sprout and grow into short-jointed, very woody pieces of cane containing numerous eyes. This abnormal growth, known locally as a "lala," is used as a cutting. A similar scheme obtains in Java, where, however, each joint as it puts forth a shoot is removed from the parent stalk, and planted separately as a one-eyed cutting. In this way nearly all the eyes of the cane can be induced to sprout. When planted, the leaves already formed are cut off, so as to reduce transpiration, until the cutting has developed a root system of its own, but experiments made there do not show that any benefit results from this practice.

In Louisiana, where it is necessary to carry over seed from the harvest at the end of the year to the time of the spring planting, seed cane is preserved buried in the ground as a protection from frost. This process is known as "windrowing." It is also in use in those islands of the Japanese Empire where a cane sugar industry is established. A peculiar method of obtaining seed in use at Ganjam, in British India, is described by Subra Rao.[3] In June the seed cane is planted in a seed bed so close as to leave no space between the individual cuttings, which are of three joints each. In the middle of August the cuttings that have by then sprouted are transplanted to a nursery about five times the size of the seed bed. The nursery is laid out in furrows about 18 inches apart. In the following May the crop is cut down and used to supply seed for the plantation or is sold to cultivators. The same method is in use in Java.

Cultivation.—By cultivation is here meant the working of the soil and the keeping down of grass and weeds during the period between the planting of the cane (or *spring* of the ratoons) and the harvest of the crop.

British Guiana.—In British Guiana and in other places dependent on manual labour a typical routine is as follows :—Shortly after a crop of cane has been taken off, the soil in between the rows of cane is turned over with agricultural forks ; this process is known as " forking banks " ; in about a month the weeds and grass that have sprung up are cut down with the cutlass, the machête, or the hoe, a process which will have to be repeated every one or two months until the canes are of such a height as to keep down the growth of weeds. Simultaneously with the weeding, earth is hoed over the cane row, the process being known as " moulding " ; in some parts, especially in Eastern Asia, this moulding is carried to an extreme pitch, the cane rows being earthed up to a great extent. In some places, as in Cuba, the keeping down of the weeds often forms the only cultivation that the cane receives.

Louisiana.—Stubbs[4] thus describes the routine followed at Audubon Park in Louisiana :—

> " The land is broken flush with a large plough, pulverized with a harrow, and bedded with two-horse ploughs. The rows are opened with a double mould-board plough, cane planted and covered, and middles broken out with the double mould-board plough. The quarter drains are opened six inches between the middle of the rows and the ditches are cleaned. At the proper time the cane is off-barred with the two-horse ploughs, scraped with hoes, and when large enough is fertilized by scattering the mixture across the open furrows and narrow ridge of cane. The dirt is returned as soon as fertilizer is applied, the middles broken out deep and clean, and the turn ploughs sent to the barn to remain until the next season. The disc cultivator, with the three small discs on either side, is used for throwing dirt to the cane at the first working, and the middle or diamond cultivator for breaking out the middles. In the second and third cultivations two middle discs replace the three used in the first, and are set to such an angle as to throw the desired amount of dirt to the cane, and are followed each time by the middle cultivator, thus completing the work with the two implements. At " lay-by," the large or " lay-by " discs are used, followed by the middle cultivator with its two front shovels removed. By proper adjustment of the two instruments, ridges of any desired height can be made and the cane properly laid by."*

Hawaii.—On the irrigated plantations mechanical cultivation is not possible and weeds have to be kept down by hand ; on a rainfall plantation the grass is mainly kept down by the use of disc cultivators run astraddle the row and turning the soil away from the cane ; this leaves only a small area to be hand hoed. After the first hoeing, fertilizer is scattered between the rows and incorporated with a tine cultivator or other implement, the soil being stirred as much as possible. On ratoon fields, the first operation after taking off the crop is usually slicing the row ; manuring follows at once, after which the soil is thrown back to the row by a disc cultivator run astraddle the row. A stubble digger (an appliance consisting essentially of a series of small tines revolving on an axle as the carriage is drawn along†) is then

---

*To those familiar with hand husbandry only, this description requires some amplification. In the Hawaiian Islands *off-barring* is termed *slicing the ratoon row*, and this term conveys a better impression of the process ; the instrument used is a disc plough of the type shown in *Fig.* 29 ; it is drawn alongside the ratoon row, cutting through the old roots, throwing the dirt away from the row and leaving an open furrow alongside the cane ; after the furrow has been exposed for two or three days the dirt is thrown back to the row by the aid of disc implements.

It should be noticed that animal power cultivation does not altogether dispense with manual labour ; in all cases the weeds and grass in the row itself have to be cut down by hand tools.

†See *Fig.* 38.

passed over the row so as to mix the manure and soil and loosen up the latter; weeds between the rows are kept down as described above.

Cuba.—F. S. Earle[5] gives the following account of a method of cultivation advocated by the Cuban Experiment Station as the most practical under the conditions there:—

> "The system recently advocated by the Cuban experiment station, while it has not yet stood the test of long-continued use, promises to solve satisfactorily the question of continued production of profitable stubble crops. It is as follows:—Plough the land intended for fall cane in the winter or spring. Plant to velvet beans in April or May. Plough these under with a disc plough in August and September. Harrow two or three times with the disc harrow. In October open deep planting furrows with the sulky double mould-board plough, spacing them about seven feet apart. Scatter tankage and potash or some similar complete fertilizer carrying about equal parts of nitrogen, phosphoric acid, and potash in the bottom of the furrow, at the rate of 500 lbs. per acre. This is best done with a two-horse fertilizer drill. A small cultivator shovel attached at the rear of the drill will serve to mix the fertilizer at the bottom of the furrow. Now drop a continuous row of seed cane in the bottom of the furrow. It is best to select plant cane or vigorously growing stubble for seed. Using that from old worn-out stubble fields is inadvisable, as it will make a weaker, less satisfactory growth. Cover with the disc cultivator, setting the gang to throw more or less dirt, according to the condition of moisture. If the ground is moist, germination will be prompter if the cane is not covered more than two or three inches. If it is dry, it is necessary to cover six or eight inches deep to prevent the drying of the seed canes. In from one to two weeks, or just as the canes are peeping through the ground, harrow the field thoroughly with the smoothing harrow running lengthwise of the rows. This will kill any small weeds that may be starting, and will freshen the surface of the soil and greatly aid germination. When the young plants are well up so that they show from one end of the row to the other, begin cultivating with the ordinary riding two-horse corn cultivator, of course straddling the row so as to cultivate two rows at once. The seven-foot rows are so wide that there will be a strip in the middle not reached by the cultivator. This can be finished by the ordinary walking cultivator of the Planet Junior type, or the narrow cultivator blades may be removed from the regular cultivator, and eight-inch cut-away sweeps be bolted on instead. These will have a wide-enough cut to meet in the centre, and as thus rigged the same implement makes a good middle cultivator. Cultivation should be repeated throughout the winter as often as is needed to keep down all weeds and maintain a dust mulch. Before spring the growth of the cane will be so great that the row can no longer be straddled, and the middles only can be cultivated. In April or the first part of May sow cow peas broadcast in the middles, cover them with the cultivator and the work is finished. Up to this point the plan does not differ materially from the ordinary system except that the use of the riding corn cultivator, which works so close to the row, makes it possible to almost dispense with the expensive hoe. It is only the few weeds and bunches of grass that come up directly in the row that have to be cut with the hoe, or better still be pulled by hand. The line of cultivation thus outlined will leave the land practically level. This is right for the red lands, since they have natural under-drainage, but in the wetter black it should be modified by using disc cultivators which ridge up the row as in Louisiana.
>
> "As soon as the cane is cut, take an ordinary horse rake and drive so as to cross the cane rows, raking the trash from one middle and dumping it in the next one. This quickly and cheaply clears half the ground so that it can be ploughed and cultivated, and it provides a double mulch of trash for the other half which makes it so thick and heavy that practically no grass or weeds can come through, and these middles will require no further attention for the season. Now plough the cleared middles with a two-horse turning plough, throwing the dirt away from the cane. Run the last furrow up as close to the cane stubble as possible. You will not hurt the roots. They all died when the cane was cut, and the new ones will form as the new shoots of cane begin to grow. If fertilizer is needed, it can now be applied in this open furrow next the cane. On most lands, however, it will only be necessary to use fertilizer every third or fourth year. Do not leave the furrow next the cane open any longer than is necessary, but work the dirt back with the cultivator, using some implement that will throw a little dirt back over the stubble. Keep these alternate middles well cultivated until the beginning of the rainy season and then sow them down to cow peas. This will be found much cheaper than the ordinary plan of going over all the surface of the ground two or three times with

> hoes, and it leaves the stubble cane in even better cultural condition than the plant cane, for one side of each row is thoroughly cultivated, while the other side is protected by a heavy mulch of trash, which serves perfectly to retain moisture. The next year, of course, the middles are reversed so that all the soil is thoroughly aerated, and pulverized every two years. And yet only half of it is exposed to the depleting influence of tillage, while all the trash is retained on the land and is ultimately incorporated with it to add to its supply of humus, a substance so necessary for successful tropical agriculture."

Generally, however, cultivation in Cuba is restricted to weeding with the hoe and the cutlass. A few plantations in the western half, it is true, use small ploughs to cut down the weeds on ratoon crops, but generally in no other cane-growing district is cultivation so neglected.

A system of cultivation due to Zayas was proposed for use in Cuba about 1908. It was suggested to plant the canes in rows about twelve feet apart and combine this with continuous cultivation. A selective harvest was also proposed, immature stalks being left over so that a continuous crop would result. The system was tried on a number of plantations in Cuba, but none of the results served as an incentive to the general adoption of the scheme.

Java.—After the cane has been planted in the carefully prepared fields of Java, cultivation is confined to weeding by hand and to earthing up the young cane. Usually the continued turning over of the soil itself destroys the weeds, which never have a chance to become established. As already described, in Java the canes are planted in deep trenches, and the cultivation consists in first of all loosening the soil in the trench with the *patjol,* and then as the cane grows gradually working down the banks until the field becomes level. In this way some foot or more of the cane stalk becomes buried in the soil. As it is exceptional in Java to grow ratoon cane, the methods of ratoon cultivation in vogue elsewhere find no place there.

Trashing.—By this term is meant the removal of the dead leaves, which normally remain attached to the cane stalks. The alleged reasons for the process are :—

1. The removal of the leaves exposes the cane to the effect of light and air, and thereby hastens its maturity.
2. The dead leaves afford harbouring places for obnoxious insects, especially plant lice and mealy bugs.
3. Water lodging in the leaf axils promotes the development of the eyes and aerial roots, to the detriment of the cane.
4. The dry leaves being placed on the ground act as a mulch and help to conserve soil water.

On the other hand it may be claimed that the ripening effect is small, and that the damage done by the labourers passing through the fields more than offsets any possible advantage. This will be particularly likely to happen when other than quite dead leaves are removed, as then the way may be prepared for the attacks of fungi. The question has been frequently put to experimental test. Bonâme,[6] who writes strongly in favour of the process found :—

A. Only completely dry leaves removed.
B. Canes trashed *à blanc,* i.e., a certain number of green leaves removed.
C. No trashing.

	A.	*B.*	*C.*
Degree Baumé	8·10	7·50	7·70
Sugar per cent.	13·40	11·60	12·20
Glucose, per cent.	1·30	1·56	1·20

No weight of cane was recorded.

But other experiments, on record elsewhere, give invariably very different results. In very detailed experiments in the Hawaiian Islands under a variety of conditions Eckart[7] found that untrashed cane gave both a higher yield and a sweeter and purer juice.

Wrapping.[8]—This process, the reverse of trashing, seems to be confined to certain portions of southern India, where in some parts the dead leaves are wrapped round the cane. It is intended partly as a protection against jackals and partly to diminish rooting and sprouting habits.

Tying up.—In Java it is customary to tie together the upper parts of the canes in different rows to keep them from " lodging " or lying down on the ground.

Weed Destruction by Spraying.[9]—Eckart, at the suggestion of Agee, has put into operation at the Olaa plantation in the Hawaiian Islands a system of weed destruction based on the use of arsenical sprays. The material used is thus prepared :—20 lbs. of arsenious acid, 4–5 lbs. of caustic soda, and 10 U.S. gallons of water are boiled for 10-15 minutes ; 15 gallons of this stock solution are diluted to 600 gallons, which is used as the spraying mixture. Of this material from 50 to 75 gallons are required to destroy the weeds on one acre, the total cost for labour and chemicals amounting to 65 cents per acre. In applying the spray the cane itself is protected from damage by its coating of wax, and the small quantity, six to seven lbs., of arsenic that finds its way to the soil is believed to be negligible and to be fixed in an insoluble state by the ferric oxide normally present. The process does not appear to have extended.

Paper Mulches.[10]—Eckart has also introduced a second radical departure in cane agriculture. He uses surplus bagasse as a source of paper which is made on the plantation. The paper is laid in strips both on the cane row and on the space between the cane row, and is intended to serve two purposes : 1. The prevention of the growth of weeds, which cannot penetrate the paper, the cane shoots being able to do so. 2. The formation of nitrate beds between the rows where, owing to the increased temperature and to the absence of light, nitrogenous organic matter in the soil will be rapidly converted into nitrates by the action of the soil bacteria.

Cutting Back.—The flowering season in the Hawaiian Islands is during the months of November and December. Cane that has been cut early in the year will flower that same year and will have to be harvested after a twelve months' growth ; such cane is termed *short ratoons*. By allowing such cane to grow till June and then cutting it back, it can be carried over the flowering season of that year and will flower in the November of the following year, thus giving a 17 to 18 months' period of growth from the time it was cut back till it flowers, and a total period of growth of not less than two years by the time it is harvested. Such cane is called *long ratoons*.

Influence of Arrowing on the Cane.—Arrowing marks the end of the vegetative period of the growing cane. It has been thought that arrowing has an influence on the sugar content of the cane ; but definite experiments by Harrison[11] and by Prinsen Geerligs[12] have shown that this belief is unfounded. After the cane has arrowed no further formation of sugar takes place, but an elaboration of that already formed obtains with an increase in the cane sugar content and in the purity; eventually, however, the cane dies down and then a breaking down of the cane sugar occurs. The time to which cane can be left standing after arrowing is very variable and is dependent on variety and climate. In the Hawaiian Islands cane may remain as long as six months after arrowing, before deterioration sets in.

Selective Harvesting.—In healthy cane there is a point at which the cane contains a minimum of, or even no, reducing sugars and where it is at its maximum purity; after this point there is a breaking down of the cane sugar into reducing sugars and the cane is over-ripe. In some varieties this reversion is very rapid and it is also influenced by climatic conditions; it is then a matter of great importance to harvest a field of cane at the time of its maximum purity. The system under which this selective reaping is pursued is thus described by Prinsen Geerligs[13]:—

> "The cane fields are divided into plots which have been planted and manured at the same time and in the same way. After ten months of growth take from each plot 40 normally grown cane stalks, and mark and number them. Every fortnight one cane stalk is cut from each one of the stools and the bundle carried to the laboratory, where the green top end is removed and the canes are measured, weighed, and crushed in a small test mill, after which the juice is analysed. The analytical data from each analysis of the test plot are entered down, so that an increase of sucrose content or purity, or a falling in them, can be detected at once. As soon as the sucrose content or purity ceases to augment, the cane of the plot under review has attained its point of maturity, and should be cut in order to prevent deterioration by too long standing in the field."

In some instances this process is followed in conjunction with a portable travelling field laboratory.

Period of Ratoonage.—The number of crops that may be taken off an area with one planting varies very greatly as between different districts, and has an important bearing on the economy of a plantation. Generally, the more crops of reasonable magnitude that can be obtained from one planting, the greater is the benefit to the plantation, and indeed in some localities the plant crop results in a loss, the profits being entirely due to the ratoon crops. It is often stated that the yield per acre progressively falls with each crop of ratoons, and, although over long periods there is a gradual falling off, very often it will be found that first and second ratoons give a harvest equal to that afforded by the plant crop. The period of profitable ratoonage depends both on soil and variety. As long ago as the very early years of the eighteenth century Rumpf[14] observed and regretted that canes in the East Indies did not afford the same long period of ratoonage as was given in the New World. Similarly Humboldt[15] has recorded that at the introduction of the Otaheite cane to Cuba the planters were fearful that it would not be found to have good ratooning qualities. It has also been observed that many of the newer seedling canes are bad ratooners, and some even degenerate into reed-like stalks after a few years' continuous growth.

Practice in different countries varies very greatly. In Java the crop is almost entirely "plant cane." This follows on the system of land tenure there, which does not allow Europeans to rent the same area of *sawah* land for more than eighteen consecutive months. In Louisiana it is customary to take off plant cane and first ratoons. In Mauritius the fields are allowed to grow up to third ratoons as a general rule. In Cuba, the West Indies and in British Guiana fifth ratoons are not uncommon, and fields that have not been replanted for a generation may be found. Much of this land has, however, been supplied with tops from time to time, so that little of the original stock may remain. In Hawaii canes are seldom allowed to grow beyond third ratoons. Generally speaking, it is only those familiar with local conditions who can determine the profitable period of ratoonage.

Long-continued ratoonage has been connected with the prevalence of various diseases, particularly those affecting the root and root stock, as in in this case the causal fungus has a continuous habitat.

Yield of Sugar per Acre.—The return of cane and of sugar per acre is determined by the soil, the climate, including herein temperature, rainfall and its distribution, the use or not of irrigation and of manures, the efficiency of the cultivation, and the degree of ratoonage practised. The highest yields are those which are obtained on the irrigated plantations of the Hawaiian Islands, where the canes are often allowed a period of growth of twenty months. Yields nearly equal in magnitude are obtained on the irrigated lands of Peru, but probably the greatest return per acre per year is to be found on the plantations of Java where the crop is almost entirely plant cane. Outside of these favoured areas the yields are much smaller and probably do not average much over twenty short tons of cane, or two short tons of sugar per acre. The maximum yields that have ever been reported are in the Hawaiian Islands, where crop averages on large plantations of more than 20,000 lbs. of sugar per acre have been recorded, and where a single field of over 300 acres has been known to yield at the rate of just over 100 short tons of cane and 15 short tons of sugar per acre.

Some actual records, all in short tons per acre, are given below.

Java.[16]—For the years stated the returns have been :—

Year.	Cane.	Sugar.	Year.	Cane.	Sugar.
1894	29·0	3·14	1899	36·2	3·97
1895	33·8	3·29	1900	37·6	3·68
1896	30·2	3·19	1901	33·8	3·47
1897	32·4	3·47	1902	35·3	3·81
1898	38·8	3·97	1903	39·8	3·97

Later results have shown a distinct increase, the return of sugar for the years 1906, 1907, 1909, 1911, 1912, being 4·49, 4·55, 4·77, 4·49 and 4·47 tons respectively, corresponding to a yield of from 40 to 45 tons of cane per acre. This regular and progressive increase is to be attributed to the application of the results of technical research.

Hawaii.[17]—For the period 1895–1910 the return of sugar per acre has been as below expressed in short tons per acre. On the irrigated plantations a distinct rise in production (equally, as in Java, to be attributed to the teachings of applied science) is seen, and this is actually more than the figures indicate, since it was only the more favoured areas which were planted in the earlier years. The rainfall plantations show the effect of climate. The yield from cane is, when averaged over a long period, a little under 14 per cent. from irrigated and a little over 11 per cent. from rainfall cane.

	Irrigated.	Rainfall.		Irrigated.	Rainfall.
1895 ..	3·83	2·65	1903 ..	6·19	3·86
1896 ..	4·52	3·68	1904 ..	5·60	2·60
1897 ..	5·08	4·35	1905 ..	6·08	2·81
1898 ..	5·03	2·97	1906 ..	5·76	3·07
1899 ..	6·08	3·53	1907 ..	5·57	3·02
1900 ..	6·12	3·13	1908 ..	6·33	3·83
1901 ..	6·19	3·28	1909 ..	6·48	3·48
1902 ..	5·84	3·00	1910 ..	6·27	3·06

Mauritius.[18]—Over the years 1892–1905 the average yield of cane was 20·6 tons per acre, with extremes of 27·6 and 7·0, the result last quoted being obtained in a year of great drought. The corresponding return of sugar would be in the neighbourhood of 2·25 tons per acre.

Cuba.[16]—For the year 1909 the average over the whole island was 18·6 tons of cane per acre, corresponding to a little over 2 tons of sugar. With the increased acreage of virgin land that has since been planted in eastern Cuba the return now (1920) will tend to be higher, and is probably a little over 20 tons.

Queensland.[16]—For the years 1909 and 1910 the yield of cane was 16·0 and 20·3 tons, the return of sugar being 1·77 and 2·32 tons per acre.

British India.[19]—For the years 1898–9 to 1905–6 the average production from the reported acreage was 0·96 ton of very crude sugar per acre.

Peru.—The occasional statements that appear indicate that here the irrigated plantations give a very high yield, little if any less than that obtained under similar circumstances in the Hawaiian Islands.

For all the other districts engaged in growing cane, it is safe to conclude from the occasional statements that appear that the average production of sugar lies in the neighbourhood of two short tons per acre.

REFERENCES IN CHAPTER VIII

1. *Int. Sug. Jour.*, 1904, 6, 277 ; 336.
2. Stubbs' "Sugar Cane."
3. Dept. of Lands, Records and Agric., Madras, 2, 102.
4. Stubbs' "Sugar Cane."
5. Southern Agriculture.
6. Culture de la Canne à Sucre à Guadeloupe.
7. H.S.P.A. Ex. Sta., Agric. Ser., Bull. 25.
8. Department of Lands, Records and Agric., Madras, 2, 10.
9. H.S.P.A. Ex. Sta., Agric. Ser., Bull. 44.
10. U.S. Patents 1,227,989 ; 1,249,355 ; 1,274,527.
11. *S. C.*, 1894, 26, 223.
12. *S. C.*, 1895, 27, 76 ; 1898, 30, 258.
13. *Int. Sug. Jour.*, 1904, 6, 381.
14. Journey to the Equinoctial Regions of South America.
15. Herbarium Amboinense.
16. From occasional statements and consular reports.
17. *Int. Sug. Jour.*, 1910, 12, 326 ; Cyclopædia of American Agriculture, 1, 106.
18. The Sugar Industry of Mauritius.
19. Dictionary of the Economic Products of India.

CHAPTER IX

THE PESTS AND DISEASES OF THE CANE

THE cultivation of the cane in all districts is one continuous struggle against its pests and diseases, and the study of methods for their control is one of the chief occupations of the experiment stations connected with the industry, and of the Departments of Agriculture in tropical colonies. No inconsiderable literature has arisen in the past thirty years, and only the fringe of the subject can be touched on here.

Abnormalities in Canes.—Peculiar canes with aborted joints, with a superabundance of eyes, with excessive development of woody tissue, with albino leaves, and with other peculiarities, are not infrequently encountered. A peculiar case was observed in the Hawaiian Islands when a seedling, H 10, with otherwise very desirable qualities, was found to have developed the habit of regularly forming its upper joints without eyes. Generally these peculiarities, known to botanists as chimæras or unicums, have only an academic interest.

Weeds.—The majority of the weeds that appear in cane fields also belong to the grasses. Amongst the more frequent members may be mentioned Bermuda grass (*Cynodon dactylon*), various species of *Paspalum, Andropogon, Panicum, Agropyron* (Couch grass) and *Sorghum* (Johnson grass).

Certain other specialized inhabitants of cane-growing districts have been put on record. Thus in Trinidad[1] the plant *Alectra brasiliensis* is known as the " cane killer," the roots of the weed being parasitic on the roots of the cane. In India *Striga lutea* is common on cane lands, an allied plant, *Arginetia brassica*, being similarly known in the Philippines. A third frequent pest of the eastern tropics is the " ilang ilang " grass, *Arundinacea imperata.* The most widely distributed and most obnoxious tropical weed is the " nut grass " or " coco grass," *Cyperus sp.*, of which three varieties are known in Java, where its local name is " teki." This sedge is an inhabitant of Southern Europe, and was recognised as an introduced pest in Barbados by Hughes[2] in 1750, and a few years later by Aublet[3] in Mauritius. In the former case it arrived in a pot of ornamental plants imported by a Mr. Lillington. A similar pest, " knot grass," *Scirpus hydra*, is recorded by Peterkin[4] in 1790 in St. Kitts, and is believed by him to be a visitor from the Carolinas. According to Dewey,[5] the most efficacious way to eradicate this weed is not to attack the underground tuber but to cut down the stems before they set seed.

The introduction of plants of any nature to an agricultural district is attended with danger, and classical instances of the damage that can be done are those connected with the Scotch thistle in Canada and the water hyacinth in Florida. In special connection with the cane sugar industry may be mentioned a woody shrub, *Lantana camara*, known as Lantana in Hawaii, and as "vielle fille" in Mauritius. This was brought as an ornamental plant to Hawaii and rapidly became a serious pest, taking over pastures and abandoned or fallowing cane fields. This plant is an inhabitant of Mexico and the West Indies. Koebele,[6] knowing of its presence there, but not as a pest, was led to investigate the cause. He found that it was controlled by a fly, *Agromyza sp*, which oviposited in the seed, and by two moths, *Platypstilia rusellidactyla* and *Crocidosema lantana*, which attacked the flower heads. The introduction of these insects into Hawaii resulted in a very short time in the almost complete disappearance of the weed.

A similar introduction into Cuba of an ornamental plant, *Dichrostachys nutans*, of habitat Northern Africa, has resulted in the covering of many acres of pasture land with dense thickets. In Cuba this plant is known as "aroma." It is an acacia-like shrub, with showy violet and yellow flowers.

The eradication of weeds should not, however, be confined to the fields alone, but should extend to the roads and vicinity of the fields, since such places may act as foci of infection whence seeds may be continually carried by natural agencies to the cultivation. In addition, as pointed out at greater length elsewhere in this chapter, such weeds may serve as breeding places for obnoxious insects, and as host plants for fungi that also attack the cane. In certain British Colonies the destruction of weeds on road-sides has been made compulsory on the owners of lands abutting thereon. The usual method of destruction of weeds is by the use of the plough or by the hoe and cutlass, and forms a part of the regular routine of any farming industry. The use of plant poisons has been experimented with for many years past, and considerable interest has attached to the use of sodium arsenate as developed by Eckart at the Olaa plantation in the Hawaiian Islands. (*Cf.* Chapter VIII.)

Mammalian Pests.—The most important mammalian pest of the cane is the rat; it is of cosmopolitan distribution and was observed as a cane enemy by Captain Cook in the eighteenth century in even so isolated a part of the world as the Island of Tanna.[7] At times, in British Guiana for example, rats appear in enormous numbers, and not only destroy cane, but also do damage to dams and parapets. Hares are known as a cane pest in Mauritius, where they do no inconsiderable damage. Elephants, bears, jackals and wild pigs must be regarded as cane pests in India. It is not perhaps altogether wrong to include the labouring population as an occasional enemy. This is particularly true in Cuba, where incendiary fires are of frequent occurrence. These fires are often set so as to force the administration to raise the price of cane cutting in order to harvest the burnt areas before the cane has quite spoiled.

Insect Pests.—The cane, in common with other crops, is attacked by a large number of insects. The majority of these pests attack the cane in common with other plants in search of food, but some have become almost specialized in their habits in regard to the cane. As regards their systematic position, the most serious pests are included in the lepidoptera (moths and butterflies), the coleoptera (beetles) and the rhyncota or hemiptera (bugs in its technical sense). The damage is done by the larvæ of the first two classes, the perfect insect being the destructive agent in the case of the third class.

Classified according to mode of attack, the major pests may be distinguished as :—

1. " Borers," or the larvæ of certain lepidoptera and coleoptera, which bore tunnels into and destroy the stalk.
2. Root-eating larvæ (grubs) of many coleoptera, which pass their larval existence in the soil.
3. Leaf-eating larvæ of numerous lepidoptera.
4. Leaf and stem puncturing insects belonging to the hemiptera.

Lepidopterous Borers.—The moth borers have been associated with the sugar cane almost from the time that its growth became an organized industry. The earliest description is due to Hamilton[8] (1734). They were established as a pest in Guadeloupe in 1758, and are described by Beckford[9] and Peterkin[3] in 1790. In systematic entomology the earliest descriptions are those of Fabricius[10] (1789), who described the West Indian borer as *Phalæna* and of Guilding[11] (1829), who made the genus *Diatræa*. Of the pests catalogued below, *Nonagria* and *Sesamia* are Noctuids, *Grapholitha* is a Tortricid, *Diatræa, Chilo, Polyocha, Scirpophaga*, and *Anerastia* are Pyralids. All these are very closely related genera. *Castnia licus* is, however, a Castnid and has little affinity to the other genera ; the moths in this genus possess clubbed antennæ and thus form a link between the Rhaplocera (moths) and the Heterocera (butterflies).

The borers that have been catalogued below :—

TOP BORERS.—*Scirpophaga auriflua.* The white borer of India.
    Sc. monostigma. The black-spotted borer of India.
    Sc. intacta. The white borer of Java.
    Sc. chrysorrhæa. India.
    Chilo infuscatellus. The yellow borer of Java.
    Grapholitha schistaceana. The grey borer of Java.
STEM BORERS.—*Diatræa saccharalis.* The West Indian borer.
    D. canella. Demerara.
    D. incohati. Demerara.
    D. striatalis. The grey stem borer of the East Indies and Australia.
    Chilo auricilia. The gold-fringed borer of India.
    C. simplex. India.
    Nonagria uniformis. The pink borer of India.
    Anerastia albutella. The green borer of India.
    Sesamia nonagrioides. The purple borer of Java, East Indies, Madeira, Mauritius, Spain, North Africa, Madagascar.
    Castnia licus. The large or giant borer of tropical America.
ROOT BORER.—*Polyocha saccharella.* India.

As will be seen from the above list, the borers have a very wide distribution, the only considerable district free from them being the Hawaiian Islands.

All the borers have a very similar mode of attack. The female oviposits on the leaf whence the caterpillar on emergence penetrates the cane usually near an eye (stem borer) or near the vegetative point (top borer). In the latter case the shoot is killed, but in the former the damage is confined to destruction of sugar, to impure juices, and to liability to fungus attacks, particularly of red rot (*Colletotrichum falcatum*) as a wound parasite. *Figs.* 43 and 44 illustrate the different modes of attack of the stem and top borers.

The large or giant borer or cane sucker, *Castnia licus*, has different habits. The eggs are laid near the ground and the caterpillar penetrates the lower portion of the stem and also the underground system of the cane. The larva and moth of *Diatræa striatalis* and of *Sesamia nonagrioides* are shown in *Plate* XVI, Nos. 1 and 2, 3 and 4.

Because of their economic importance the borers have been studied in great detail. As they occur in Java reference may be made to Kruger and Van Deventer. Maxwell Lefroy has described the West Indian borer[12] and the borers of British India.[13] That of Mauritius has been described by Bojer[14] as *Proceras saccharifagus,* and by Delteil as *Tortrix saccharifaga,* and that of New South Wales by Oliff.[15] A full description of *Diatræa* in the southern part of the United States has been given by Howard. Here it also appears as a corn stalk borer.

The following life history of the West Indian borer is due to Maxwell Lefroy:—[12]

> " . . . . the eggs are flattened, oval and slightly convex, about 1/25th inch in length; they are laid in clusters on the leaf of the cane, the number being very variable, lying between 4 and 57, and being generally from 10 to 30. The eggs when fresh are light yellow; in 36 hours a tinge of orange appears, and eventually they turn orange brown; in the final stage the centre of the egg becomes black. If the eggs are laid on young cane, the part attacked is the axil of the leaf or the leaf itself; in the case of older cane, the part attacked is the joint, the caterpillar eating its way into the cane from which it eventually emerges in from 30 to 35 days. The period of pupation which takes place inside the cane is six days, after which the perfect insect emerges. The moth is inactive by day, and, only living 4 days, lays in that time from 100 to 300 eggs."

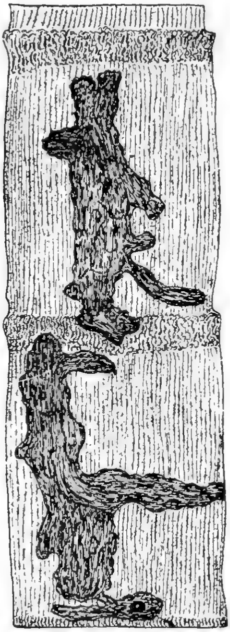

FIG. 43

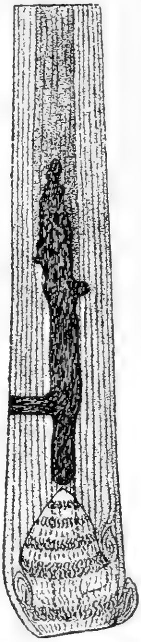

FIG 44

Leaf-eating Caterpillars.—Occasionally cane-growing districts are visited by great numbers of leaf-eating caterpillars, which appear suddenly and as suddenly disappear. Most of these are the larvæ of noctuid moths, the most notorious being the "army worm," *Cirphis* (*Leucania*) *unipuncta,* the "grass army worm," *Spodoptera mauritia,* and various cut worms belonging to *Agrotis* and allied genera. Very many of these pests are known, Swezey[16] having observed thirty-five species in the Hawaiian Islands alone.

The causes of the epidemics are obscure; in some cases local conditions, such as floods, may have caused them to desert their usual feeding places.

Minor Lepidopterous Pests.—Of the lesser lepidopterous pests may be mentioned various "bud worms," or the larvæ of Tineid moths belonging to the microlepidoptera, and mostly included in the genera *Ereunetis* and *Opogona*. Normally these larvæ feed on the dried leaf sheaths, but they also penetrate and destroy the eye of the cane. They are of very wide distribution. Another minor pest is the "leaf roller," *Omoides accepta*, which does a certain amount of damage in the Hawaiian Islands. The life history of both of these classes has been worked out by Swezey.[17]

Coleopterous Pests.—The coleoptera are equally destructive with the lepidoptera, but with one notable exception their method of attack is different. Nearly all the coleoptera which have been observed as cane pests pass their larval stage underground as root eaters. They are popularly known as grubs. The chief species of the root borers that have been studied are:—

Apogonia destructor,[18] the Wawalan beetle of Java, illustrated in *Plate* XVI, Nos. 5, 6, 7.

Many species of *Lachnosterna* (May beetles), *Diaprepes, Prepodes,* and *Ligyrus* [19](hardbacks) in the West Indies.

Lepidiota albohirta[20] (cane grub or grey back beetle) in Australia.

Anomala sp.[21] in Hawaii.

Phytalus smithi[22] in Mauritius.

Of these species, *Anomala, Apogonia, Phytalus,* and *Ligyrus* are lamellicorn beetles, *Lachnosterna* and *Lepidiota* are scarabids, and *Diaprepes* is a curculionid or snout beetle.

The damage done by these insects is very great, but, as the destruction is not so patent, they have not become so notorious as have the lepidopterous pests. Of all of them, that which causes most harm seems to be *Lepidiota albohirta* in Australia, which, in spite of the efforts of skilful entomologists, still remains an imperfectly controlled pest, sometimes causing the abandonment of otherwise suitable areas.

The life history of a West Indian root borer, *Diaprepes abbreviatus*, is thus given by Watson.[23]

> "In August and September the perfect insect lays its eggs on the upper surface of the leaves, and after 10 days the grub emerges and falls on to ground, immediately burrowing into the ground in search of food. The grub remains in the soil for 312 days, eating the root of cane, sweet potato, etc., and then pupates, the perfect insect emerging in fifteen days to repeat the same cycle. The grub at first is only 1/18th inch long, reaching at maturity a length of one inch."

The most dangerous coleopterous pest other than the root borers is the Hawaiian weevil borer, *Rhabdocnemis obscurus*. This insect occurs as a pest all over the Australasian region. It is illustrated together with a piece of damaged cane in *Plate* XVI, Nos. 8 and 9. The life history as given by Koebele[24] follows:—

> "The female beetle is easily separated from the male by its longer, smoother and more slender beak, and its pointed terminal segment. She lays her eggs consecutively, probably 4 to 8 each day, but less than this toward the end of the period of eight months during which she continues to lay. When the egg is laid in the cane from the outside this is done from under the sheath, which the beetle

> can brace against; with the saw-like movable teeth laterally she first begins to eat out the hole until softer ground is struck, so to speak, when she will force the work, moving the head up and down as well as sideways, until the whole length of the beak is buried.
>
> "Upon soft parts of split cane this operation takes from 1½ to 2 minutes; no doubt much longer in boring through the hard epidermis, probably hours. After the hole is completed, the beetle walks up and inserts the ovipositor, remaining in this position from 4 to 6 minutes. The bone-coloured egg is found embedded parallel to the fibres. It is about 2 mm. long by 1 mm. in thickness, and slightly bent. The hole close to this is filled in with mucous matter intermixed with particles of fibre. Repeated observations show that these eggs hatch in six days. The newly hatched larva is at first transparent as the eggs of the latter production, the first being of a more opaque colour as also the young larvæ, with the head of a dark yellow colour. We found that the young larvæ went out in the same direction as fibres about one-eighth of an inch deeper, having made a hole one inch long in from four to five hours. As the larva increases in size, its power of boring becomes more rapid. A half-grown specimen traversed a piece of cane six inches in length, from end to end in three days."

A closely allied species, *Matamarsius hemipterus,** is also known as a minor pest of similar habits in the West Indies.[25]

Of minor coleopterous pests there may be recorded the "bibit keever," or cane-top beetle, *Holonaria pisescens,*[26] the perfect insect attacking the eyes of the cane; and several "leaf miners," such as *Aphanisticus krugeri* and *Hispella sacchari,*[27] which feed on the leaves. The two last-mentioned insects are only reported from Java.

Hemipterous or Rhyncotous Pests.—The Hemiptera are a great order of insects, characterized by the development of the mouth parts into an organ known as the beak or rostrum and adapted to the purpose of sucking animal or vegetable juices. The phases of insect life known as lice, blights, blast, scale, bugs (in its technical sense), are included in this order. The damage done is material through the destruction of tissue in stem and leaf, and this is then followed by fungi that gain entrance through the wounds thus made. Although these insects are very small, and though the actual damage done by each individual is almost inappreciable, yet the enormous numbers in which they occur, due to their great prolificness, make them one of the major dangers to agriculture. Of those that have become the most notorious may be cited the asciracids, *Delphax saccharivora*[28] (the "cane fly" or "spittle fly" of the West Indies), *Perkinsiellia saccharicida*[29] (an Australian species), the "leaf hopper" of Hawaii, and *Dicranotropis vastatrix*[30] of Java; the coccid, *Icerya seychellarum,* (pou à poche blanche of Mauritius),[31] and the cercopid, *Tomaspis posticata,* the frog hopper of Central America and Trinidad.[32]

Of minor pests that have been recorded may be mentioned various coccids, such as *Trcchocorys* (*dactylopius*) *calceolariæ,*[33] the "mealy bug," of very wide distribution; certain aphids, such as the black and yellow "blast" in the West Indies, *Aphis setariæ* and *Sipha flava;*[34] the white and the green louse of Java, *Oregma* (*Ceratovacuna*) *lanigera,* and *Aphis sacchari.*[35] This last species is illustrated in *Plate* XVI, No. 10, and shows the enormous number of these insects that may occur in a limited area.

Orthopterous Pests.—The orthoptera do not include any major pests of the cane. The one of most interest is the "mole cricket," *Scapteriscus didactylus,* of the West Indies.[36] While a general feeder, this insect only attacks the cane incidentally. During the day it feeds on roots underground

---

*The two insects discussed above were formerly known as *Sphenophorus obscurus* and *S. sericeus,* and it is under these names that they are described in all but the more recent literature.

PLATE XVI.

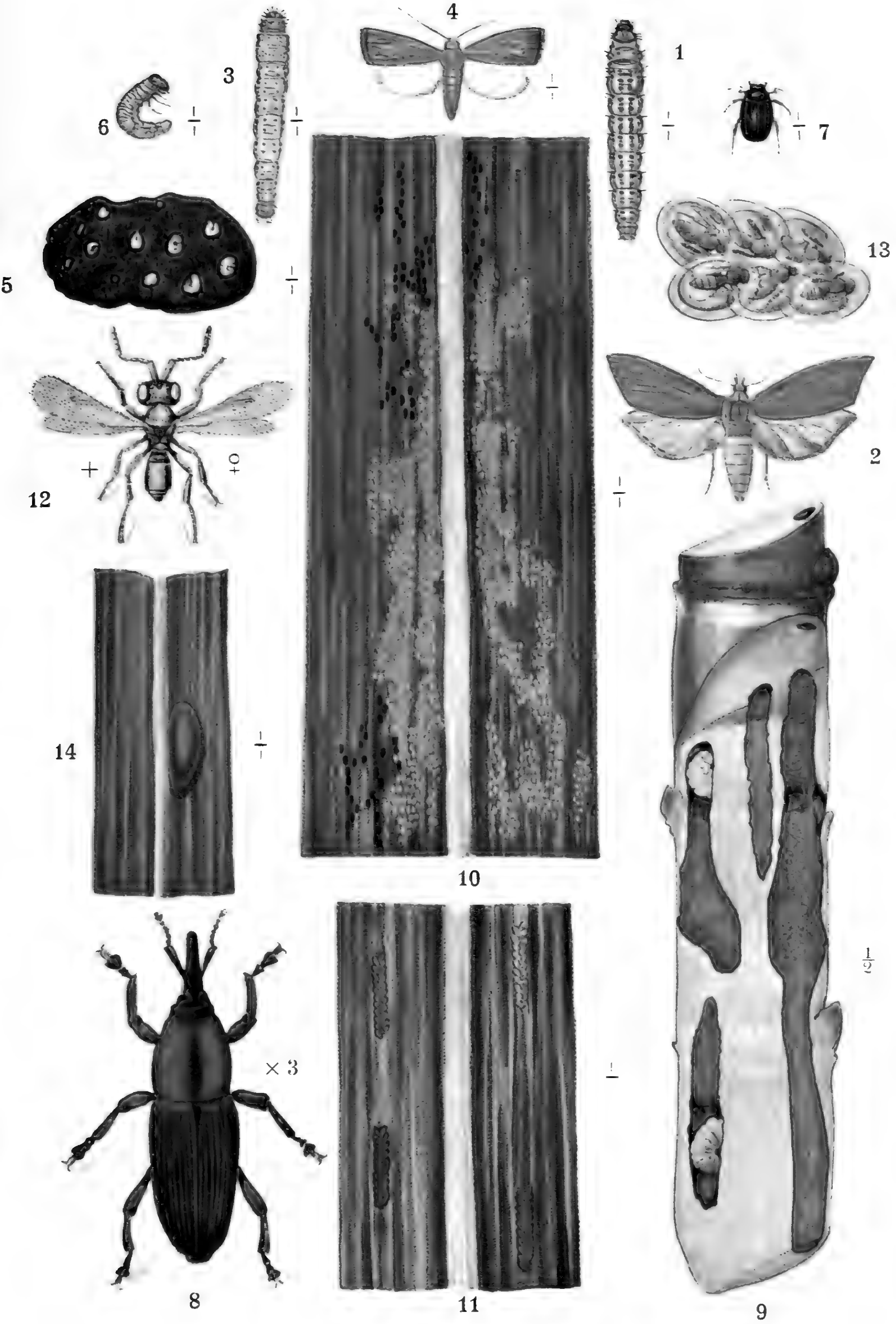

and emerges at night to attack the crop above ground. It only becomes dangerous when for some reason the natural balance has been disturbed.

Another widely distributed cricket, *Gryllotalpa africana,* in addition to feeding on the cane, does damage to irrigation ditches in the Hawaiian Islands by means of its tunnels.

White ants, *Termes taprobanes*, have been recorded in India by Hadi[37] as attacking seed cane and the young shoots after germination, and are to be regarded as a major pest of that country. In Java the " thrips " or " bladder feet," sometimes included in the orthoptera, have been observed as a minor pest.

Acarid Pests.—Mites are a form of life frequently found on cane, but the damage done is usually trifling. A serious amount of harm was done in Queensland in 1876 by a mite, *Tarsonymus bancroftii.*[38] The disease was then known as " cane rust." These mites are also present in Java and in Barbados. To a certain extent they are to be considered beneficial, since Ormerod has observed the parasitization of the eggs of the West Indian borer by this form of life.

Worms.—Certain nematode worms have been recorded as attacking cane. Of these there are *Heterodera radicicola*[40] and *Tylenchus sacchari* in Java.[41] At one time these worms were thought to be connected with the Sereh disease. More lately Cobb[42] has described a nematode, *Tylenchus similis,* which he has observed as parasitic on the roots of sugar cane and banana in both Hawaii and Jamaica.

Insect Epidemics.—In the history of the sugar cane are to be found numerous instances of insect epidemics. In most of these there has been a short period in which the presence of the insect was casually observed. This has been followed by a period over which the damage occasioned has been intense. Eventually the pest reaches a permanent endemic stage, with irregular outbreaks of the epidemic phase. This course of events follows on certain " natural laws," discussed in another section.

Of insect epidemics of greater interest, there may be recorded :—

1. In 1760 an extraordinary plague of ants, which has been described by Castle[43], appeared in the West Indies. Both Castle and Hughes[4] seem to think that the ants were attracted as predators to the " blast " due to aphides at that time prevalent on the cane. This " blast " is frequently referred to by the early writers on the West Indies; a yellow blast, probably due to the aphis, *Sipha flava*, and a black blast, probably due to a second aphis, *Aphis setariæ,* were distinguished.
2. In the early part of the nineteenth century much damage was done by an asciracid, *Delphax saccharivora.* This insect had been present for many years, and reached the epidemic stage about 1830, the destruction of cane being particularly great in Grenada.[28] It still remains as a major pest in Jamaica.
3. The " pou-à-poche blanche " became exceedingly destructive in Mauritius about 1860.[31] This epidemic was caused by a coccid, *Icerya seychellarum,* a second coccid, *Pulvinaria iceryi,* being also present. Although a definite statement is impossible, it is highly probable that this insect arrived in Mauritius with canes imported from Australasia.
4. About 1850 a very serious outbreak of " moth borer " occurred in Mauritius.[14] It is almost certain that the pest in this case was introduced

in a consignment of cane from Ceylon. The infection of the canes was observed, and orders were given for their destruction. It is believed that some ill-advised planter surreptitiously obtained cuttings and planted them in the Flacq district.

5. In Porto Rico in 1876, consequent on the destruction of the avian population by a hurricane, the mole cricket, *Scapteriscus didactylus*, caused great damage not only to cane but to all crops.[36]

6. Early in the twentieth century the "leaf hopper," an asciracid, *Perkinsiellia saccharicida*, appeared in Hawaii,[29] and for three or four years did great damage. Undoubtedly this pest arrived from Australasia. The story of this epidemic and its control forms a classic in economic entomology, and is discussed at length elsewhere.

7. About 1910 serious damage was observed in certain parts of Mauritius, the cause being ascertained to be due to the larva of a root-eating lamellicorn beetle, *Phytalus smithi*.[22] This pest had been introduced with cane from Barbados, and in the latter island its presence was barely known owing to efficient parasitization.

8. At the same time the observation recorded in (7) was paralleled in Hawaii by the appearance of another lamellicorn root-eater, *Anomala sp.* In this case the introduction was from Japan, and was not connected with cane importations. Similarly also, the pest was barely recognised as present in Japan.[21]

9. About 1901 a long-continued borer epidemic began in British Guiana.[44] This was caused by the "large" or "giant" moth borer, *Castnia licus*. In distinction to some of the other epidemics recorded, this was caused by an indigenous pest. The habitat of this insect is from Central America to the Amazon, and previously it had only been recorded as feeding on the roots of certain orchids near the upper Orinoco. For some obscure reason it suddenly developed the habit of attacking cane.

THE "NATURAL CAUSES" AND "NATURAL CONTROL" OF INSECT EPIDEMICS.

The rate at which insects multiply is very great, a single female producing several hundred eggs. Unless there were some controlling factor limiting the increase of insects agriculture would be impossible. The most important one is to be found in parasitism, whereby one insect, a crop predator for example, acts as the host for a parasite which lives on and destroys its host. In this way a "natural balance" is maintained.

This observation offers an explanation of the cause and course of insect epidemics. In the first place an insect with predaceous habits is introduced into a district and arrives there unaccompanied by the parasites which restrain its developments in its original habitat. Its multiplication now becomes so rapid that in a short time an intense insect epidemic occurs. Generally when discussing introductions two distinct conditions may be recognised. The locality of introduction may be continental, in which case there is likely to be a very ample local fauna, which may contain insects parasitic on the introduced species, or insects which in a short period of time may develop the faculty of parasitization.

In this case a severe epidemic is unlikely, or the introduction may even pass unnoticed. This statement is not, however, to be construed as implying that insect damage may not be great in a continental area. In British

Guiana, for example, the "moth borer," though severely parasitized, annually causes great damage, and up to the present no parasite has been recorded as controlling the "large moth borer" there present and an indigenous species. Similarly, the island of Trinidad, which from its proximity to the mainland is rather of the continental than the insular type, has suffered very severely from an epidemic of the cercopid "frog hopper," *Tomaspis posticata.*

The second condition obtains in islands remote from the mainland which generally possess a very restricted fauna. As instances of such districts may be cited the Hawaiian Archipelago and the islands of Mauritius and Bourbon. The more remote West Indian islands would also fall into this category, while the islands of Cuba and Java, from their proximity to the mainland, would be more of the continental type. Under the second condition the introduction of predatory insects is likely to cause a severe epidemic and several such have been quoted in a previous section. These epidemics may be regarded as caused by the disturbance of the "natural balance."

When a crop becomes subjected to insect damage, periods of greater and of less incidence are observed. This observation also follows a natural cycle. At one period the pest may be present in great numbers. The parasite, if present, then has unrestricted opportunity to carry out its life work, and the epidemic period is followed by the partial disappearance of the pest. The parasite now has less material on which to work so that its numbers tend to decrease, and consequently the pest again appears in quantity. The incidence of the pest will also be controlled by seasonal variation, some seasons being favourable to the development of the pest and some to that of the parasite. The matter is further complicated by the presence of hyperparasites, which have the same relation to the parasite that the parasite has to its host. As instances of parasitization and of hyperparasitization, the observations of Ulrich[45] in Mexico may be quoted. He there found that the frog hopper, *Tomaspis posticata,* was attacked by a reduviid bug, *Castolus plagiaticollis,* the eggs of the bug being parasitized by a hymenopteron, *Telenomus sp.* Similarly in Fiji the efficiency of the introduced tachinid parasite of the beetle borer was found by Illingworth[46] to be depreciated by the presence of an ant, *Pheidole megacephala,* which acted as a predator on the fly.

Occasionally instances are observed where a factor is inimical to both host and parasite ; such a combination is recorded by Ritchie,[47] who, in the West Indies, observed ants preying both on the "cane fly," *Delphax saccharivora,* and on its syrphid parasite.

In addition to the parasitization of insect by insect, various fungi have been observed to attack and thus to control insects. The effectiveness of this control does not yet seem to have been worked out. Speare[48] has made a study of parasitic fungi affecting various pests, and has recorded the presence of *Entomophthora pseudococci* and *Aspergillus parasiticus* on the mealy bug, *Pseudococcus sp.* ; of the green muscardine fungus, *Metarrhizium anisopliæ* on the Hawaiian beetle borer; and of *Cordyceps sp.* on the leaf hopper. The green muscardine fungus appears to be of very wide distribution, and it has been specially studied by Rorer[49] in connection with the frog hopper in Trinidad, where it has been artificially grown on the large scale and distributed over infected areas. Similarly *Cordyceps* is also widely distributed, and it has been recorded on the caterpillar of the West Indian moth borer. A species of *Botrytis* is known to cause the death of the caterpillars of *Psalis securus* in Java, and a scale louse, *Aleyrodes longicornis*, attacking fruit trees in Florida and also known as a cane pest, is attacked by a fungus, *Aschersonia aleyrodis*.[50] Ritchie also records the very effective control exerted by *Fusarium sp.* on the cane fly in Jamaica.[47]

The recognition of the natural balance suggested the means whereby insect epidemics can be placed under control by the introduction and encouragement of the parasite or natural enemies of the pest. The credit for the recognition of this means, and also for its successful operation is due in the first place to Koebele,[51] who used it with pronounced success in controlling scale insects on fruit trees in California. In this instance the chief pests were various coccids, one of the most dangerous being the white scale, *Icerya purchasi*. This was brought under control by the introduction from Australia of a lady-bird predator, *Vedalia cardinalis*. Koebele afterwards became connected with the Hawaiian Sugar Planters' Association and associated with Perkins, Craw, Swezey, Kirkaldy and Muir, who were also employed by the Association. About 1900 a serious epidemic of leaf hopper broke out in Hawaii. It was recognised that the introduction was from Australia, and expeditions were soon despatched there. The parasites of the leaf hopper were found, collected, and imported to Hawaii under careful control. The result was that in a short period the leaf hopper was very materially diminished in number. Of the numerous parasites imported, the most effective were egg parasites, amongst these being three myramids, *Paranagrus optabilis*, *P. perforator* and *Anagrus frequens*. A chalcid, *Ootetrastichus beatus*, and a dryinid, *Ecthrodelphax fairchildii*, belonging to the local fauna, were also useful.[29]

The success which attended the natural control of the leaf hopper stimulated the Hawaiian Sugar Planters' Association to attempt a similar control over the borer beetle, *Rhabdocnemis* (*Sphenophorus*) *obscurus*. This insect had been introduced into Hawaii, probably in 1854 along with the consignment of cane that had formed the parent stock of the Lahaina cane. By that time (1905) it had come to be looked upon as a necessary evil. Certain districts were more severely affected than others, the amount of damage done varying with season. The problem was to locate the original habitat of the borer, to ascertain its natural enemies, and to transport them to Hawaii unaccompanied by any hyperparasites which might be present. This task was assigned to Muir, who, starting his search in Southern China, finally located the borer beetle in Amboina (Lat. 8° S., Long. 125° E.) in 1908, and afterwards in New Guinea, where he established himself. As anticipated, the borer was found to be efficiently controlled, the parasite being a tachinid fly, *Ceromasia sphenophori*. The introduction of this parasite presented unexpected difficulties, and it was only after the establishment of intermediate breeding stations at Brisbane and Fiji that it reached Hawaii; once there it became rapidly established, and succeeded in effectively controlling its host, reducing the annual destruction of cane to a small figure.[52] The two instances quoted above are those to which most attention has been attracted; some others may, however, be noticed. In 1910 an epidemic due to a beetle root-borer, *Phytalus smithi*, appeared in Mauritius.[22] It was ascertained that the insect had existed almost unnoticed in the British West Indies, where it was effectively controlled by a scolid wasp, *Tiphia parallela*, which was then introduced into Mauritius. In this instance the importation had undoubtedly occurred along with some canes coming from Barbados.

A little later this observation was almost exactly paralleled in Hawaii, where a sudden localized epidemic due to the larva of another root-eating beetle, *Anomala sp.*, broke out. In this case the importation was from Japan, but was not in cane consignments. An investigation in Japan located its parasite, *Tiphia sp.*, which was successfully introduced into Hawaii. In this case again the presence of the pest was hardly known in its natural habitat.

The introduction of the parasites of pests is not unattended by a certain amount of danger, as in some cases the parasite may itself become a pest, or it may attach itself to a new host, and in any case to obtain the maximum of effectiveness the parasite must be introduced without its hyperparasites if any such exist. In most of the cases recorded above the parasites were obligatory, that is to say they were so highly specialised that they depended for their life cycle on the host and on the host alone. Their introduction then was attended with no danger of the disturbance of the natural balance, but rather tended to re-establish it.

The classical instance of the disturbance of the natural balance with lamentable effects is the introduction of the mungoose into Jamaica. This animal was so effective that not only did it destroy rats, but also attacked other animals, as well as poultry and birds. The result was a great increase in the number of ticks.

The control agents mentioned above fall into two main classes, predators and egg-laying parasites. In the former class are to be included such controls as the lady-birds that devour the scale insects of Californian fruit trees. Birds are very useful in controlling the various "army" and "grass" worms, and the control of these in Hawaii is largely due to the importation of the "mynah" bird from India. In the West Indies swallows have been recorded as keeping down the numbers of the cane fly, *Delphax saccharivora*. Amongst insect predators an elaterid has been observed preying on the larva of the moth borer in Cuba, and Muir also observed an elaterid destroying the grubs of the Hawaiian beetle borer. Ants also are valuable predators, but they have such a wide range of food habits that often they live on both pest and parasite.

Generally predators fall far short of egg-laying parasites in effectiveness. These fall into two groups, egg parasites, and larval parasites. In the former class are to be found many minute hymenoptera, chiefly represented by chalcidids and myramids. In the latter class are to be found both hymenoptera and diptera. The former are represented by small wasps, of which the scolids afford many examples. The latter contain many species of tachinid flies, which appear to be amongst the most valuable control factors. The egg parasites oviposit directly in the egg masses of their hosts. The scolid wasps usually sting their host in such a way as to paralyse, but not to kill it ; at the same time an egg is deposited in the body of the host, which forms the source of food of the parasite until it emerges as the perfect insect.

The method of parasitization pursued by the tachinid fly, which controls the Hawaiian beetle borer is very remarkable. The fly, which is both oviparous and viviparous, oviposits at the entrance to a borer tunnel, and apparently locates the presence of a borer grub by the sense of smell, since it seldom oviposits at the entrance to an empty tunnel. The maggots on emergence find their way to the grub, the body of which they enter. The grub is not killed until it has finished completing its puparium, which is then used for the purpose of pupation by the parasite.[52]

Equally remarkable is the method of parasitization observed by Swezey[16] as followed by another tachinid, *Chætogædia monticola,* a control agent of the " grass " worms in Hawaii. This fly deposits on the leaves of the plant which forms the caterpillars' food. The eggs thus laid are eaten by the host, and in their passage through its mandibles are cracked, permitting the escape of the maggots, which live in and on the body of the host, and eventually destroy it.

Swezey also observed that if more than one egg was eaten by a caterpillar neither host nor parasite survived. The instinct of the fly seemed to recognise this, since it was observed to deposit but one egg on each leaf.

In *Plate* XVI, No. 11, are shown the egg masses of *Diatræa striatalis*, the upper masses show freshly laid eggs and their appearance just before the emergence of the caterpillar ; below is indicated on the right their appearance when parasitized by the proctotrypid, *Ceraphron beneficiens,* and on the left when attacked by the chalcid, *Chætosticha nana.* The last-named parasite is illustrated in *Plate* XVI, No. 12, and a highly enlarged view of a parasitized egg mass with the parasite fully developed is shown in No. 13. The very different egg mass of *Scirpophaga intacta* is shown in No. 14. All of these are after Van Deventer.[53]

The efficiency of the natural method of control has not passed unchallenged, and in particular the work of Koebele, Perkins and their associates in Hawaii has been criticised by Froggatt.[54] He was inclined to attribute the diminution of the hopper to the burning of trash, a practice, however, that had been in use for many years before the advent of the hopper. In addition, the burning of trash is not advised by Perkins, since the hopper can escape by flight, while its parasites are unable to do so. Froggatt's criticism was hypercriticised by Silvestri,[55] who wrote in the highest terms of the work of Koebele and of Perkins. Since then the control of the beetle borer by its natural enemies has been accomplished, and this feat reflects equal credit on the entomologists who conceived the plan, on the explorer who executed it, and on the association which had sufficient faith in applied science to finance it.

The Principal Pests and their Parasites.—The number of insects attacking the cane and their parasites is very great, and the list is continually being added to. Below are catalogued a few of the more important pests and their parasites.

Moth Borers (not including *Castnia licus*).—In Java hymenopterous egg parasites, *Ceraphron beneficiens* and *Chætosticha nana.* In British Guiana egg parasites, *Chætosticha sp., Trichogamma minutum, Telenomus sp.*, and as a larval parasite a tachinid fly, *Hypostema sp.*, a braconid wasp, *Iphiaulax sp.*, and the fungus, *Cordyceps barberi.*

Army Worms, Cut Worms, etc.—e.g., *Spodoptera mauritia, Cirphis unipuncta* in Hawaii by birds, by tachinid flies as *Chætogædia monticola* and by an ichneumon *Ichneumon koebeli. Lamphygma frugiperda* in the West Indies by tachinid flies. All these are larval parasites.

Root-eating Beetle Larvæ.—In Porto Rico, *Lachnosterna sp.* (May beetles) by a scolid wasp *Tiphia inornata,* by a tachinid fly *Cryptomerigenia aurifacies,* and by the green muscardine fungus *Metarrhizium anisopliæ.* In the West Indies *Phytalus smithi* by a scolid *Tiphia parallela* ; *Ligyrus rugiceps* (hardback) by a scolid *Campsomeris dorsata* ; *Prepodes vittatus* by a scolid

Elis atrata. In Hawaii *Anomala sp.* by a scolid *Tiphia sp.* In Australia *Lepidiota albohirta* (cane grub) by a scolid *Dielis formosus*. All the above are larval parasites except the fungus, which attacks the perfect insect.

Beetle Borer.—*Rhabdocnemis obscurus* by a tachinid *Ceromasia sphenophori* and by the green muscardine fungus.

Hemiptera.—In Mauritius, *Icerya seychellarum* (pou-à-poche blanche) by a chalcidid. In Hawaii, *Perkinsiellia saccharicida* (leaf hopper) by the myramid egg parasites, *Paranagrus perforator, P. optabilis* and *Anagrus frequens*; and in the perfect stage by a dryinid, *Ecthrodelphax fairchildii*, and by a chalcidid, *Ootetrastichus beatus*. In the West Indies, *Delphax saccharivora* (cane fly) by a myramid egg parasite *Anagrus armatus*, and in the perfect stage by a dryinid *Strepsiptera sp.*, by a fungus *Fusarium sp.*, by ants, and by swallows. In Trinidad, *Thomaspis posticata* (frog-hopper) by a reduviid bug, *Castolus plagiaticollis*, by a chalcidid *Oligosita giraulti*, and by the green muscardine fungus. In Hawaii, *Trechocorys calceolariæ* (mealy bug) by lady-bird predators and by the fungi *Entomophthora pseudococci* and *Aspergillus parasiticus*.

Other Methods of Control.—1. *Use of Poisons.*—The use of poisons is largely confined to the destruction of rats. The poisons that are most commonly employed are preparations of strychnine, arsenic, squills, phosphorus, and barium. Bread grains, banana, and molasses are food media used to distribute the poisons.

Leaf-eating caterpillars are to some extent controlled by the use of arsenicals, sold under the trade names of "Paris Green" and "London Purple." These materials have been used in the campaign against the "giant" moth borer in British Guiana. In Australia the injection of cyanide of potassium into the soil has been used to destroy the grub of the "grey back" beetle *Lepidiota albohirta*.

2. *Collection by Hand.*—In districts where labour is cheap and plentiful, a diminution of insects is obtained by means of hand collection. In regard to the moth borer this collection takes the form of cutting out the "dead hearts" of the injured cane and the collection of the eggs laid on the leaves. The children of the Asiatic and negro labourers forming the bulk of the population of many estates can be easily trained to perform this task. It is important that they be taught to recognise the difference between parasitized and sound eggs, and this they readily do. Further, when paid by results they have been known to collect and substitute the egg masses of other insects. Zehntner in Java recommended that the collected eggs should be placed on trays surrounded by a layer of molasses, which would prevent the escape of the caterpillar, but allow the parasite, which emerges as a perfect insect, to fly away.

The night-flying coleoptera and lepidoptera may be captured by exposing lamps in infected areas. For the capture of the wawalan beetles, *Apogonia destructor*, Zehntner devised the trap shown in *Fig.* 45, which is exposed under a lamp during the period of their nuptial flights.

Exceptionally, as in the case of the slow-flying diurnal, *Castnia licus*, the perfect insect may be caught in quantity in nets. The employment of bait as a means of attracting insects was once used in the Hawaiian Islands, and Koebele[24] has recorded that with sour cane and with the help of seven little Indian girls in Fiji he has collected 16,000 beetles in four hours, and that by means of systematic collection over three years the pest nearly disappeared. Similarly, S. M. Hadi[37] has recorded that in India the white ant is attracted by dung, which is purposely placed on the canefields.

3. *Rotation of Crops.*—This is recommended by Watson as likely to diminish the prevalence of the root borer, *Diaprepes abbreviatus,* and amongst crops not attacked he mentions ochra, yams, eddoes, woolly pyrrol, pigeon pea, bonavist bean, and rouncival beans.

4. *Use of Insecticide Washes.*—The great area of plantations prevents the utilization of this means, which is necessarily confined to orchards and similar industries where the crop is produced under intensive rather than under extensive conditions.

5. *Flooding.*—The flooding of fields has been used to destroy such insects as are of subterranean habit in part of their existence, such as the "large" moth borer, *Castnia licus.*

6. *Destruction of Breeding Places.*—Whenever possible this method is one of great effectiveness, and it is applied on an extensive scale in the campaigns carried out against the mosquito and other disease carriers. In the Hawaiian Islands, also, systematic measures are taken to destroy the eggs of the sarcophagid flies which breed in latrines, and which are associated with the spread of typhoid and other intestinal diseases. While not directly connected with growing cane, attention to such matters has an important economic bearing as affecting the health and efficiency of the population of an estate.

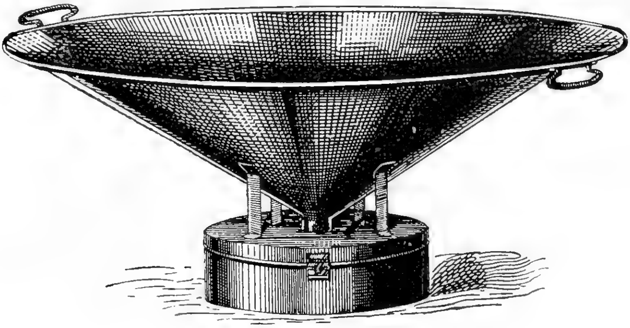

FIG. 45

In regard to sugar cane insects, the matter is complicated by a number of factors. Guilding,[11] whose remarks are quoted below, in 1834 advised trashing as a means of reducing the numbers of the moth borer, but other factors have to be considered, and often the limited labour supply will prevent anything of this nature.

Uncontrollable local conditions may also be a factor aiding the unrestricted development of a pest. Such a condition is discussed by Walcott[56] as obtaining in British Guiana, where, owing to climatic conditions, cane in all stages of growth is to be found in juxtaposition. There is thus a constant habitat of young cane, which is preferred by the borer for ovipositing. Quelch[56] has made suggestion that this state of affairs might be remedied by planting areas of large units separated by distances greater than the normal range of flight of the borer.

Of a different nature are the conditions observed by Walcott[56] in Trinidad in connection with the froghopper. He noted the ill-kept conditions of the fields and the large areas of grass-grown land in close proximity to the canefields. Regarding the froghopper as originally feeding on grass he considers these areas as foci of infection. These observations recall the comments made by Guilding[11] in 1834 in reference to the moth borer :—

> "Those animals which the Creator has thought fit to form and preserve for ages man will not be permitted to exterminate ; we may, however, with propriety, strive, and by all means in our power, to lessen the number of those creatures which injure or destroy our property. Those animals, when they assail us in moderate numbers, act only as a stimulus, wisely sent to arouse the inattentive planter to cleaner and more careful modes of husbandry. When they swarm so as to deprive him of his crops, the loss must be in future attributed either to his obstinacy or to his negligence."

A number of years ago the advice was very frequently given that the burning of trash would destroy the breeding places and at the same time the pests themselves. It is now recognised that this advice is bad. Perkins[29] in particular has shown that the leaf hopper is able to escape by flight, but that many of its parasites fail to do so. Similarly, and for the same reason, Van Dine[57] attributes the comparative freedom of Cuba from insect damage to the practice of cutting without burning, and of leaving the trash to rot on the land, as compared with the opposite custom in Porto Rico, where the damage is much greater.

7. *Cultivation.*—In the case of root eating grubs, ploughing at the appropriate season will result in bringing many to the surface, where they may be eaten by birds, including domestic poultry. Such a scheme is followed in the control of the cane grub in Australia, and in India in connection with a grasshopper, *Hieroglyphus frucifer.*

8. *Quarantine of Imported Plant Material.*—The instances already quoted show how great may be the danger of an unrestricted importation of cane. The Territorial Government of Hawaii established a system of inspection a number of years ago, and the Federal Government of the United States has absolutely prohibited the importation of cane. To a certain extent so stringent a ruling is to be deprecated since a district may wish to obtain a new and valuable variety. While the *uncontrolled* importation of cane is to be unreservedly condemned, the danger of importing, under rigid inspection and isolated and protected propagation, the *single* cutting necessary to establish a variety reaches the vanishing point.

9. *Infection with Disease.*—A number of years ago it was proposed to destroy rats by means of cultures of organisms producing specific rat diseases. One of the most widely used preparations was Dansyz virus, but the results have been contradictory.

10. *Encouragement of Natural Enemies.*—This heading is really included under the term "natural control," which is, however, restricted more or less to specialized parasitization. The natural enemies of insect life include birds, lizards, toads, newts, lady-birds and spiders. Amongst the natural enemies of rats should be included snakes, and their beneficial action on a sugar plantation was noted by Dutrône as early as 1790.

CHAPTER IX

Cane Diseases.

The sugar cane, in common with other cultivated plants, is subject to a number of diseases. The great majority of these are known to be due to certain specific fungi, but in one case, the gumming disease, the causal organism is a bacillus. In a number of cases the causal organism is specific to the cane, that is to say it has been observed as parasitic on the cane and on no other plant. In other cases, as in the pineapple disease and the root disease, other plants may act as hosts.

An interesting point in regard to cane diseases is the very wide distribution of one and the same organism, as instanced by the red rot of the stem (*Colletotrichum falcatum*) known to occur in Java, British India, the West Indies, Louisiana and Hawaii, and in the gumming disease known to occur in Brazil, Argentina, Madeira, Mauritius and Australia.

This wide distribution can best be attributed to the uncontrolled importation which has taken place in past times. In the case of the gumming disease, certain facts on record are suggestive, though not positive. This disease was first described by Dränert[58] in 1869 as prevalent in Brazil. At this very time importations of Brazilian canes were made to Mauritius, and from Mauritius there have been frequent exportations to Australia. It is in these three widely separated localities that gumming is known as a dangerous disease.

On the other hand it is sometimes possible to specify the period of infection, as instanced by the introduction of Iliau to Louisiana[59] along with canes sent from Hawaii, and of the Australian leaf-splitting disease to Formosa.[60] But perhaps the most suggestive illustration is that connected with the outbreak of the yellow stripe disease in Porto Rico in 1916. Previously yellow stripe had been known as a pathological condition in Java and in Hawaii, but had not been recognised as an infectious disease. About 1910 certain approved Java seedlings were imported into Egypt, thence they went to Argentina, and from there they were brought to Porto Rico in 1914. In no one of these localities had yellow stripe been recorded before, but in each, shortly after the introduction, the disease was recognised, and in 1916 it assumed a dangerous epidemic form in Porto Rico, becoming also known there as the Mosaic or Mottling disease.

The history of the sugar cane is associated with a number of epidemics of disease. The earliest of which any record exists is that which occurred in Mauritius and Réunion in the years 1848-51,[61] and which forms one of the links made use of by Darwin in building up his theory. The cane affected was the original stock introduced by Bougainville from Otaheite, and the disease was characterized by a " corkscrewing " of the top and a yellowing off. At the time it was attributed to degenerescence, and it was observed that the degenerescence had been noticeable for fifteen years before the fulminant outbreak.

Second in sequence is the epidemic of gumming, which appeared in Brazil as early as 1857, and was very prevalent in 1865 ; the variety mainly affected was the Cayenne or Otaheite cane.

Gumming was also responsible for an epidemic in Madeira in 1885, and again appeared in a fulminant form in Mauritius in the 'nineties. Here again the cane most affected was the Louzier, which probably represents a second establishment of the Otaheite stock. Third in chronological order is the epidemic which became serious in Porto Rico in 1872, causing the elimination of the Caña blanca, or Otaheite cane. An extant account of the disease by Stahl describes what appears to be top rot as a dominant symptom.

In 1876 an epidemic described as "rust' did great damage in Australia and Natal in the 'eighties also suffered severely from some undescribed disease. The two epidemics most often referred to are the sereh disease of Java, which appeared about 1890, and resulted in the nearly complete disappearance of the Cheribon cane; and the rind fungus of the British West Indies, prevalent at the same time, and which, as in many other cases, selected for attack the Otaheite (Bourbon) cane. These last two epidemics had some good effect, as they afforded great stimulus to the propagation of seedling canes.

Yet another instance of the susceptibility of the Otaheite cane to disease may be found in its early disappearance from the Island of Hawaii, and to its present sickness in the other islands of that archipelago.

The latest instance of an epidemic is to be found in Porto Rico, where in 1916 the Yellow Stripe disease but recently imported there assumed a fulminant form.

Degenerescence is often given as a cause of these epidemics, but the writer in the position of a layman regards the explanation as unrational. What is in all probability one and the same cane (Otaheite) has been the subject of most of the epidemics referred to above. During the time 1848–51 that the first Mauritius epidemic occurred, this cane was flourishing in the West Indies, and a few years later was introduced to the Hawaiian Islands with remarkable success. Excepting the possible presence of adventitious seedling descendants, each and every cane then growing must have been the progeny in unbroken asexual descent of one cane, which probably originated as a seedling in some island of Polynesia, probably Otaheite, and, to go further, all the then existing canes may be regarded strictly as one and the same individual. Looked at in this light, degeneration as the result of age, or as the result of continued propagation from cuttings, appears ill-founded, and the epidemics were more likely to have been due to improper agriculture leading to harmful soil conditions, combined possibly with the development of an organism or organisms of a virulent strain due to long-continued access when the cane once formed the sole crop of a locality.

Leaf and Leaf-Sheath Diseases.—No one of the fungi that attack the leaf is to be considered as a major disease. Notwithstanding, the sum total of the damage done by the immobilization of some portion of leaf surface must annually reach a very large sum. Most of the diseases that have been described in the literature are referred to below.

Yellow Spot.[67]—*Cercospora Kopkei* (*Krüger*); *Maculis amphigenis, sinuosis, confluentibus, purpureo brunneis, infra pallidioribus, margine concolori; hyphis plerumque hypophyllis fasciculatis, septatis, apice nodulosis, denticulatisque fumoso brunneis,* 40–50 × 7; *conidiis fusoideis, subrectis,* 20–30 × 5–8 *medie* 40 × 6 *utrinque obtusiusculis,* 3–4 *septatis, non constrictis, passim guttulatis, subhyalinis.*

The disease appears as dirty yellow spots, often meeting to form one irregular blotch. A brown mycelium is found on the leaf, the branches of which, sometimes isolated, sometimes united in bundles, carry colourless spores (*Fig.* 46); the appearance of the underside of the leaf is as if covered with a white dust. It is only reported from Java.

Eye Spot.[68] *Cercospora sacchari* (Van Breda de Haan).—*Hab. in foliis, quæ maculantur, sacchari officinarum. Hyphæ pluriseptatæ, bruneæ,* 120–60; *conidia* 60–80×9–12, *vermicularia,* 5–8 *septata, brunea.*

The spores of this fungus, after Cobb, are shown in *Fig.* 47. The presence of this disease is indicated by small red dots, which grow into long elliptical dark red spots, with a light yellow margin; at a later stage the centre becomes a dull dead yellow, surrounded by a dark red area, and this is circumscribed by a bright yellow border; the elongated elliptical shape of the spots, which may grow up to 1½ to 2 inches in length, is retained; the appearance of the spots is not dissimilar to the eye on a peacock's wing. With a pocket lens hairs (conidiophores) may be seen growing from the leaf.

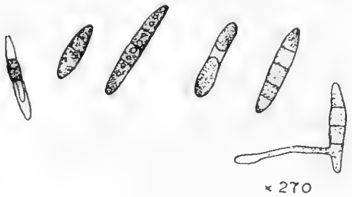

FIG. 46

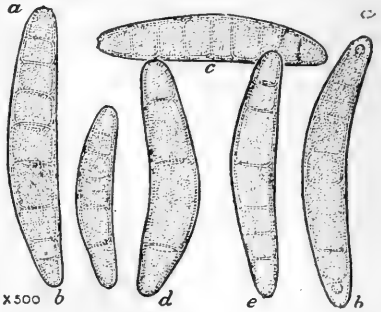

FIG. 47

In Java the disease does not appear on Cheribon cane or on cane grown on mountain plantations. In Hawaii it only makes progress in wet weather. Varieties differ much in susceptibility, and in one Hawaiian seedling, H 333, it appears as a stem disease. This disease is probably the same as *Helminthosporium sacchari*, reported in India by Butler.[69]

Eye Spot of the Leaf Sheath.[70] *Cercospora vaginæ* (Krüger).—This disease is characterized by a brick-red spot appearing on the leaf sheath; the red coloration does not spread over the leaf sheath; the centre of the spot eventually becomes black. In *Fig.* 48 are shown the spores after Krüger. Their length is from 19·6 to 40 microns, with an average of 25·2 microns, and with a breadth of 7 microns. The disease has been reported from Java, British Guiana, Porto Rico, Santo Domingo, Cuba, Jamaica, Louisiana and **India.**

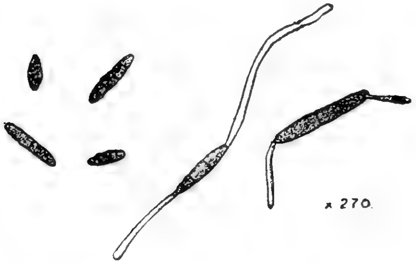

FIG. 48

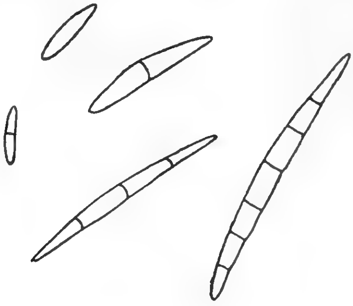

FIG. 49

Black Spot of the Leaf Base.[71] *Cercospora acerosum* (Dickoff and Hein).—This disease causes a blackening of the leaf base. The spores, shown in *Fig.* 49, after Dickoff and Hein, are bobbin-shaped, from 2 to 3·5 microns wide and from 10 to 50 microns long, and contain from one to seven septa. This disease is reported from Java only.

Brown Leaf Spot.[72] *Cercospora longipes* (Butler).—*Maculis elongatis, amphygenis, saepe confluentibus, primo sanguineis, arescendo stramineis brunneo-cinctis ; hyphis in caespitulos gregarios collectis plerumque hypophyllis flexuosis, brunneis, sursum geniculatis vel denticulatis,* 100–200 × 4, *conidiis obclavatis sursum attenuatis, rectis vel curvulis* 4–6 *septatis* 40–80 × 5 *hyalinis.*

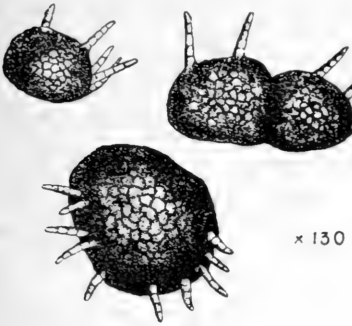

FIG. 50

This disease is described by Butler as very prevalent in North and South Behar. It has also been reported in Trinidad and Porto Rico. Narrow oval spots about one-eighth of an inch long, and of a reddish brown colour, are the first signs of the disease ; as the spots increase in size a brown centre becomes evident, and at one stage of the disease three concentric rings, brown, red and yellow, are seen. Eventually the spot becomes a broad oval, deep brown ring, with a straw-coloured centre. The rings are usually from a quarter to a third of an inch long by a quarter of an inch or more in breadth. At a late stage the bodies shown in *Fig.* 50, after Butler, appear on the spots, but it is not certain that they belong to the same fungus.

Ring Spot.[73] *Leptosphæria sacchari* (Van Breda de Haan).—The conidia of this fungus are shown in *Fig.* 51, after Cobb. The appearance of this disease is so similar to that caused by eye spot that confusion is possible. The differences are that in Ring Spot the spots are seldom more than half an inch long, and are nearly as broad as long. The bright yellow margin observed in Eye Spot is absent, and the centre of the spot is a dull greyish white. The conidia are found chiefly on the under surface of the leaf. They are three-celled, the central cell being larger than the outer ones, the whole cell forming an obtuse-angled body. Recent workers think they have no connection with the disease. At a later stage perithecia appear on the leaf as small black spots. Each ascus contains four bobbin-like spores. This fungus has been reported from Java, Hawaii and British Guiana, where it is the most common leaf disease. Its prevalence depends on climatic conditions, late ripening being accompanied by a heavy incidence.

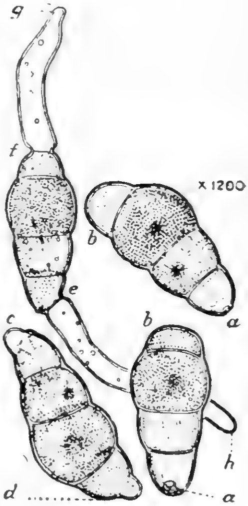

FIG. 51

Red Spot.[14] *Eriosphæria* (Went), *Coleroa* (Van Breda de Haan), *Venturia* (Saccardo) *sacchari.*—*Hab. in foliis sacc. offic. Perithecia* 70–80 *diam. ; asci* 25 *long., octospori, sporidia* 11 × 16.

This organism forms dark red spots on the leaf, generally roughly circular and about one centimetre in diameter. The connection between the disease and the fungus has not been proved by infection experiments.

Red Rot of the Leaf Sheath.[75]—This disease, originally reported from Java, is probably the same as that due to *Sclerotium Rolfsii.* The disease is characterized by the leaf sheath becoming red, the red coloration spreading all over the sheath and shading off into an orange colour. The disease passes from the leaf sheath to the stem, attacking the soft parts near the nodes. At a late period of development the affected parts are covered with an abundant mucous mycelium, and eventually a large number of sclerotia, the size of a pin's head, are produced. These are at first white and eventually become yellow and brown. The diseased parts have a smell of mushrooms. It is young cane that is most often attacked, and in the case of tops the germination of the eyes may be prevented. The disease has been reported from Java, St. Croix, Porto Rico, Cuba, Barbados and Jamaica.

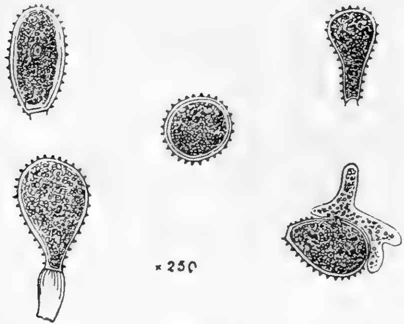

Fig. 52

Acid Rot of the Leaf Sheath.[76]—This disease much resembles the one described above. It is distinguished by the lighter red colour of the infected parts, by the larger-sized orange sclerotia and by the odour of apples. The disease does not readily pass to the stem, and then only attacks young internodes.

Cane Rust. *Puccinia kühnii* (*Krüger*), (Butler).—*Soris uredosporiferis hypophyllis linearibus ; uredo-sporis e globoso ellipsoideis pyriformibus, contentu aurantico, exosporio copiose aculeato, hyalino,* 18 – 34·5 × 28·5 – 57·5 ; *pedicello hyalino, clavato, suffultis.*

Various forms of these spores, after Krüger, are shown in *Fig.* 52. In this disease narrow orange-coloured stripes appear on the leaf, especially on the underside, and from these stripes an orange-coloured dust can be scraped. This serves to distinguish this disease from other leaf diseases. The rust is composed of the spores of the fungus. In Java, whence it has alone been reported, the disease is everywhere present in damp districts, but the damage done is small. Butler has recently found a second stage of this fungus on *Saccharum spontaneum* in Burma which shows it to be a *Puccinia*, not a *Uredo*, as it was formerly called.

Leaf-splitting Disease.[78]—This disease, which is perhaps confined to one district in Hawaii, is characterized by a number of yellow stripes appearing on the leaves, which afterwards split and wither. Cobb considered the disease due to an organism, *Mycosphærella striatiformans*, but did not prove the connection by inoculation experiments. Similar manifestations are reported from Fiji and the Argentine, and as early as 1849[79] Bojer described a similar appearance in Mauritius, attributing it to electrical influences in the atmosphere.

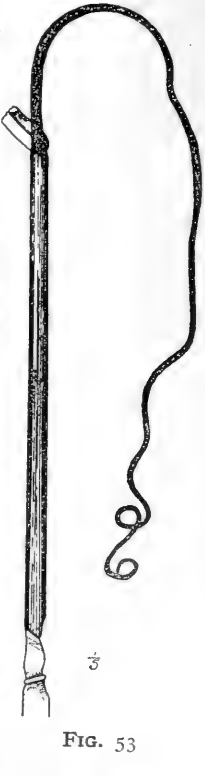

Fig. 53

Wither Tip.[78]—This disease, reported from Hawaii, is characterized by the ends of the leaves withering, the midrib remaining green after the rest of the leaf is dead. It is also reported from Porto Rico.

Diseases of the Stem.—The fungi that attack the stem form the more destructive diseases of the cane, and have been more intensively studied. A short account of them is appended.

Black Smut.[80] *Ustilago sacchari* (Rabenhorst).—*Soris atris; sporis globosis subangulatis,* 8–18, *olivaceo-brunneis, vel rufescentibus, episporio crasso levi instructis.*

The appearance of infected cane and of the spores is shown in *Figs.* 53 and 54. The organism which causes the disease is found in all affected parts. The top of young cane is most severely affected, and is turned to a black whip-like substance covered with a greasy foul-smelling slime. The causal organism occurs on grasses and on wild cane, which may be a source of infection. Butler[69] has observed that those canes which more nearly approach the wild varieties are more susceptible, though the thicker tropical varieties are far from immune. Generally the damage is not great, but the writer has seen no inconsiderable damage in Mauritius. It has been reported from Natal, India, Java, Queensland, Mauritius and British Guiana.

FIG. 54

Gumming Disease. *Bacterium* (Cobb), *Pseudomonas* (Smith), *vascularum.*

Parasitic on sugar cane, clogging the vascular bundles with a bright yellow slime, and forming cavities in the soft parenchyma; frequently comes to the surface of the inner leaf sheaths as a viscid slime. Surface colonies on + 6 standard nutrient agar pale yellow, smooth, glistening, rather small, round, rather flat with sharp margins; rods small measuring on an average, 0·4 × 1 microns when stained; motile, single polar flagellum; occasional very slight liquefaction of gelatine, growth on potato cylinders, good but not copious; litmus milk is blued; no reduction of nitrates, no acids, no reduction of litmus, no gas. Group No. 21–½ 3332523.

Gumming of the cane and the disease connected therewith was first described by Dränert[58] as causing a serious disease in Brazil. In the same year Horne[115] reported a diseased condition of canes in India, and in specimens sent to England Berkeley observed the presence of gum, and of a fungus *Labrella sp.* It was afterwards studied by Cobb[81] in Australia, who isolated the causal bacterium. All of Cobb's deductions were afterwards confirmed by Erwin Smith.[82] The manifestations of the disease have also been described by Bonâme[83] in Mauritius as the "maladie de la gomme." The disease is outwardly characterized by the exudation of drops of gum from a cut or punctured surface, as shown in *Fig.* 55. The top of the cane also becomes charged with an offensive slime and the growth is seriously affected. Varieties differ much in susceptibility. Gummosis of the cane was early observed in Java in connection with the sereh disease (q.v.), but the opinion of all the early pathologists in Java was that there was no causal connection between the two conditions. Very recently, however, Wolzogen-Kühr[84] stated that he had definitely established the identity of the two diseases, finding the *Bacillus vascularum* present in all cases of sereh. The disease known in

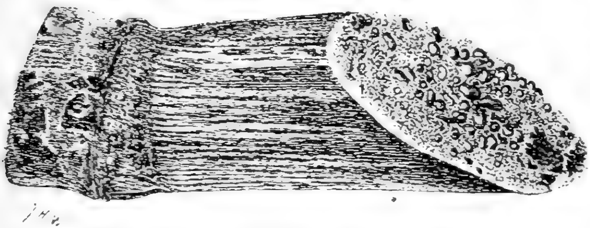

FIG. 55

Argentina as Polvillo or Gangrena humida, and described by Spegazzini[85], seems to be also this disease.

Red Rot of the Stem. Colletotrichum falcatum[86] (Went).—Setis nunc seriatis, nunc in pseudo-conceptaculum congregatis cuspidatis, 100–200 × 4, fuligineis, sursum pallidoribus, conidiis falcatis, 25 × 4, hyalinis, ad basim setulorum, basidiis ovoideis 20 × 8, hyalinis vel fuscis, suffultis. Hab. in culmis vivis.

Fig. 56 shows the spores, and *Plate* XVII a photograph, of the diseased cane, both after Lewton-Brain. This disease was first described by Went in Java, and afterwards has been studied by Howard[87] in the West Indies, by Butler[66] in India, and by Lewton-Brain[88] in Hawaii. It is a serious and widespread disease, and is caused by the presence in the interior of the cane of the causal organism. Unless the plant is seriously affected, no outward sign of disease is observed. At a later stage the stalks become sickly and the leaves die prematurely. On cutting open an infected stalk the manifestation of the disease is shown by an unequally distributed red coloration, with characteristic white spots in the centre, as indicated at × in *Plate* XVII. This appearance serves to differentiate the disease from the red stripe of sereh. In the white patches a mould is always present, while a few threads of mycelium are found in the red ones. In the vascular bundles brownish-black patches also occur, connected with which is a mycelium flourishing in the cells and walls of the bundles.

If a piece of diseased cane be allowed to dry, black streaks appear, due to stromata, from each of which spring a number of brownish-black straight hairs measuring from 100 microns to 200 microns in length and 4 microns wide. Among these hairs arise a number of sickle-shaped conidia, measuring 25 microns by 5 microns. If the diseased cane be kept in a damp place a white mycelium turning to grey appears, forming, in a few days, chlamydo-spores or resting spores.

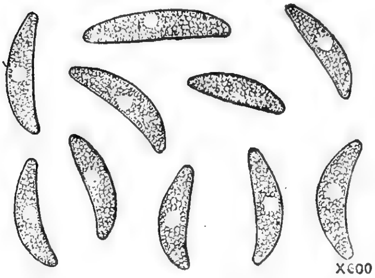

Fig. 56

The lesion is entirely confined to the parenchyma, and since the fibro-vascular bundles congregated near the rind are not affected, the leaves can still communicate with the roots.

Canes affected by this fungus afford a juice of lower sugar content and purity than do sound canes. This effect was shown by Lewton-Brain to be due to the presence of a sugar-inverting enzyme.

Different varieties of canes exhibit very different degrees of susceptibility, and Butler has observed that the reed-like canes of India are less liable to attack than the thick ones. Otaheite cane is peculiarly susceptible.

Originally the disease was considered to be a wound parasite, obtaining entrance only after the protective rind had been injured by insects or by other processes, such as high trashing. Butler has, however, shown that the fungus may obtain entrance through the embryonic roots. He has also observed the organism as parasitic on the leaves of the cane, and that cuttings may be infected through the soil.

This disease is specifically associated with the cane, and is not known to occur on other plants. It has been reported from Java, India, the West Indies and Hawaii, and may be regarded as cosmopolitan.

RED ROT OF STEM.

PLATE XVIII.

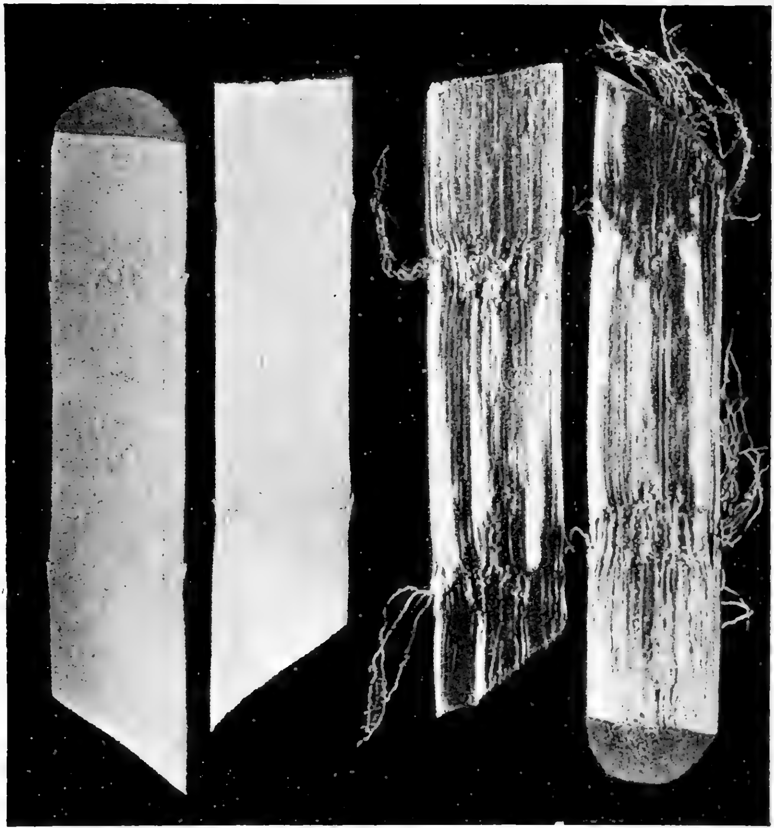

PINE APPLE DISEASE

Cane Wilt.[89] *Cephalosporium sacchari* (Butler).—Effuse, white, hyphæ creeping, sparsely septate, 3-5 microns in diameter; conidiophores continuous, simple furcate or verticillate, above obtuse, at the middle or toward the base widened, 6–30 microns long, 3–4 wide; conidia numerous arising in succession at the apex of the branches and collected in a head but easily separating, hyaline, ovoid or oblong ellipsoid, continuous, 4–12 × 2–3 microns.

This disease, which was first described in India by Butler, duplicates that described above in its life history and mode of attack. The macroscopic appearance of the lesion differs from that of red rot in producing a diffuse purple discoloration with bright red patches, turning when older to an earthy brown. It has also been reported from Natal, Barbados and Nevis.

Hendersonina sacchari (Butler).—Stromatibus cortice innatis demum erupentibus sub-globoso conicis 1-2 m.m. diam. atris, intus 1-pluri-locularibus; loculis irregularibus subinde incompletis vel inter se communicantibus, ostiolis sæpe confluentibus; contextu brunneo, minute parenchymatico; basidiis ramoso-fasciculatis, hyalinis; sporulis dimorphis, aliis fuligineis, rectis vel curvulis, ellipsoideis vel elongatis, utrinque obtusis, continuis vel 1–2 septatis, 15–24 × 3·75–5 μ, aliis hyalinis, filiformis, rectis vel flexuosis, pluriguttulatis, 20–60 × 0·6–2 μ.

This disease is reported from India by Butler. In mode of attack it is similar to the two diseases noted above.

Pine Apple Disease.[90] *Thielaviopsis paradoxa* (*de Seynes Höh.*)—Hyphæ steriles hyalinæ vel pallide fuscæ, septatæ. Hyphæ fertiles septatæ non ramosæ. Macroconidia ovata, fusca, catenulata, mox secedentia. Microconidia cylindracea vel bacillaria, hyalina, in interiore hypharum catenulatim generata et mox ex apice exsilientia. Macroconidia 16–19 × 10–12, microconidia 10–15 × 3·5–5, in interiore hypharum 100–200 microns long. Hab. in culmis, fructibus, foliis in insula Java.*

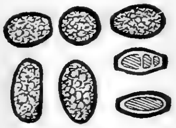

FIG. 57

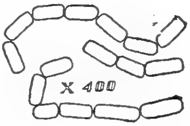

FIG. 58

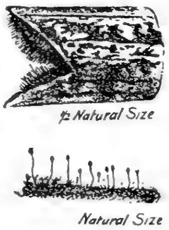

FIG. 59

Plate XVIII shows the appearance of sound and diseased canes, and *Figs.* 57 and 58 that of the macro- and micro-spores.

This fungus, which was first described by Went,[90] in connection with the cane, is a wound parasite, and particularly attacks and prevents the germination of cuttings. Diseased canes first of all become crimson red in the interior and then turn black. At the same time they give off a peculiar odour reminiscent of pineapples, which is diagnostic of the disease. In pure culture the organism remains white for twenty-four hours and then turns olive green. The colour is due to the macro-conidia situated in special cells at the ends of short branches of the mycelium. The micro-conidia, which are rectangular and colourless, occur in chains of three or more, and are also formed within the top of a hypha. This organism is parasitic on pineapples and other plants.

Black Rot.[72] *Spaeronaema adiposum* (Butler).—Mycelio dense lanoso, atro, ex hyphis brunneis, ramosis composito; hyphis fertilis simplicibus, septatis, endoconidiis gerentibus; endoconidiis polymorphis, cylindraceis pyriformis vel globosis, aliis hyalinis vel brunneis, levibus, aliis fuscis verrucosis, 9–25 × 4·5–18; peritheciis globosis, pilosis,

---

* This fungus was first described by de Seynes in 1886 as *Sporochisma paradoxum*. Saccardo renamed it *Chalara paradoxa*. Went in 1893 described it as a new species *Thielaviopsis ethaceticus*. Höhnel in 1904 recognised the identity of the two fungi and called it *Thielaviopsis paradoxa*. (*v.* Bull. 171, Bureau of Plant Industry, U.S. Department of Agriculture.)

atris, in collum erectum, rigidum, 2–6 m.m. × 50, productis, ore subfimbriatis; sporidiis hyalinis, continuis, crasse lunulatis, utrinque acutis, 6·5 × 3·5, muco adiposo obvolutis. Hab. in culmis sacchari officinarum India.

Fig. 59 shows a cutting affected with this disease. The disease is not of importance, and the mode of attack is similar to that described above.

FIG. 60

Iliau.[91] *Gnomonia iliau* (Lyon).—Perithecia 325–480 × 240–310 microns in size, with beak about 350–550 microns; asci clavate, thin-walled, 60–80 × 14 microns, with a well-developed pore at apex; spores 1–septate, hyaline, slightly curved, often slightly restricted at the septum. Pycnidia 500–700 microns in diam., thin-walled; spores dark-brown, elliptical to oval, coarsely granular, 7–10 × 15–28 microns.

Figs. 60 and 61 show the spores and a section through the perithecium of this fungus. This disease, which was first described by Lyon in Hawaii and independently investigated at the same time by Edgerton[60] in Louisiana, attacks the cane in its early stages of growth. Under conditions favourable to the fungus the stalks remain small and may die. If they recover they may be structurally weakened, due to the poor development of the basal portion, and are thus liable to damage by high winds. The fungus, which manifests its presence by the appearance of a white mycelium, is present on the leaf sheath and also penetrates to the interior of the stem. The disease is only reported from Hawaii, where it is probably indigenous, and in Louisiana, where it probably was imported from Hawaii.

Root Diseases.—The diseases which are mentioned in the following paragraphs are not (with one exception) definitely associated with the root system of the cane. They occur especially on the basal portion of the cane, and also probably find a habitat in the soil. It is for these reasons that they are frequently termed root diseases.

Root Disease.[92] *Dry Disease. Doknellan ziekte.*—*Marasmius sacchari* (Wakker). *Gregaria vel basi fasciculata, diversa, carnoso-membranacea persistentes; pileus albus late-campanulatus dein sordide albus, planus vel cupuliformis,* 15 *m.m. diam. lamellae albae simplices vel bifurcatae. Stipes centralis albus, long.* 15 *m.m. apice tubiforme, base villosa. Hyphae albae. Sporidia hyalina, continua, irregulariter oblonga, utrinque attenuata,* 16–20 × 4–5. *Hab. in caulibus vivis.*

The toadstool and the spores of this fungus, both after Cobb, are shown in *Figs.* 62 and 63.

This is one of the more serious cane diseases. It was first observed in Java by Wakker, where it is prominent in nurseries. In the West Indies it appears on plantation cane. The disease is characterized by the presence of a white mycelium gluing the leaf sheath to the basal part of the stem. The mycelial strands penetrate into the ground and cause a decay of the roots, cutting off the water supply and thus giving to the cane the appearance of the results of drought. The appearance of the toadstools is very uncommon. Johnston[93] states that in some cases they only appear in rainy weather and sometimes only during the dry season. The disease has been reported from Java, and generally through the West Indies.

FIG. 61

Marasmius stenophyllus.[94]—Pileus thin soft, fleshy but tough and persistent, convex to irregularly expanded, umbilicate, becoming eccentric with age, gregarious to cespitose, 1–4 c.m. broad; surface minutely fibrillose to glabrous, radiate rugose, hygrophanous, pale-yellowish white to pale-reddish tan, margin concolorous, incurved when young, lamellae adnate with a slight collar, rare short decurrent, rather distant, broad, inserted, the long ones ventricose, white interveined, often forking; spores ellipsoid, smooth, hyaline, about 7–9 × 5–6 microns; stipe white, tough, cylindric, tapering upward, usually curved, glabrous, white at the apex, pale reddish below, whitish mycelial at the base, solid or spongy, at first central, often strongly eccentric with age, 1–4 cms. long, 1–2 m.m. thick.

This fungus is peculiarly associated with the banana, but has been recorded on the cane also in Cuba.

Schizophyllum alneum.[94]—Pileus fan-shaped, very thin, white and grey, downy, often lobed, 2–5 c.m. broad, gills pale brown with a purple tinge, split portions and edge of gills revolute; spores dingy 4–6 × 2–3 microns.

This fungus has been reported from Pernambuco, British Guiana, and the West Indies generally, but its parasitism on the cane is not definite.

FIG. 62

Himantia stellifera[95] (Johnston).—Mycelium cobwebby or somewhat dendritic, white, ascending the lower leaf sheaths and within the roots; hyphæ with clamp connections, and bearing on short side-branches stellate crystals of calcium oxalate. No fruiting bodies known.

This fungus was first discussed by Cobb[96] in Hawaii as the "stellate crystal fungus," and was later identified as above by Johnston as occurring on cane and pasture grasses in Porto Rico. Its habit of attack is similar to that of the *Marasmius.*

Odontia saccharicola[97] (Burt).—Fructification resupinate, effused, adnate, very thin, pulverulent, not cracked, whitish, drying cartridge-buff, the margin narrow and thinning out; granules minute but distinct, about 6–9 to a millimetre; in structure 30–50 microns thick, with the granules extending 45–60 microns more, composed of loosely and somewhat horizontally arranged, branched, short-celled hyphæ 2–3 microns in diameter, not nodose septate, not incrusted but having in the spaces between the hyphæ numerous stellate crystals 4½–7½ microns in diam. from tip of ray to tip of opposite ray; cystidia hair-like, flexuous not incrusted, septate, weak, often collapsed, tapering toward a sharp point, 1½–3 microns in diam. protruding 8–18 microns, about 1–3 to a granule at the apex; basidia simple, cylindric-clavate, with 4 sterigmata reduced to mere points; basidiospore hyaline, even, 5½ × 2½ microns, flattened on one side. Fructifications 3–5 cms. broad, extending from the ground upward on sugar cane in some cases 20 cms. or more, and sometimes wholly surrounding the cane.

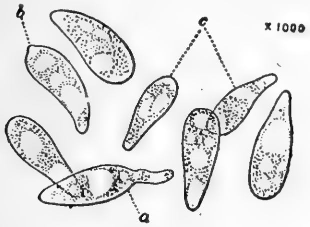

FIG. 63

This fungus is very common in Porto Rico, where it causes the basal leaf sheaths to rot, but that it is a root fungus proper is not yet ascertained.

Another allied species, *Odontia sacchari*, has also been found uncommonly on leaf sheaths in Porto Rico, but its parasitism is uncertain.*

* The connection of the fungi discussed above has been accepted as the cause of the condition referred to as "Root Disease" since Wakker's publication in 1895. Very recent studies have challenged this position; thus Lyon has described from Hawaii a fungus placed among the Chytridiaceæ to which the damage is ascribed, and Carpenter also in Hawaii has obtained evidence that a Pythium is the causal agent. In Porto Rico Matz has associated a Myxomycete with the manifestations of root disease in that island. Earle,[116] who has collated the more recent investigations, inclines to the view that the Marasmius and associated basidiomycetous fungi are very feeble parasites, and that the real damage is due to the fungi mentioned above, their action being made possible in the first place by bad conditions in the soil.

Top Rot.—This is a condition where the vegetative point of the cane rots and turns to a black, slimy, foul-smelling substance. Bacteria are associated with this condition but their presence is believed to follow the disease, and not to cause it. Earle believes that the real agent is the Myxomycete, observed as a cause of root disease by Matz, which, invading the whole cane, so weakens the tissues as to prepare the way for the bacteria associated with the condition.

"Rind Disease" and Rind Diseases.—By the term "rind disease" one of two things may be meant. Reference may be made specifically to the disease due to the organism, *Colletotrichum falcatum,* and already described under the heading "Red rot of the stem." It is in this sense that the term is used in the publications of the Imperial Department of Agriculture for the West Indies. Secondly, reference may be made to a condition of dead or dying cane associated with the presence on the rind of black erumpent pustules and hyphæ, which may be due to at least three distinct organisms. The whole matter has been very confused, and doubt and diversity of opinion still exist. The confusion may be best realised by regarding the subject in its historical sequence.

In 1878 diseased canes with the peculiar characteristics mentioned above were sent to Kew from Porto Rico, at which time there was an outbreak of rind disease in the sense noted secondly above.[98] The fungus on these canes was described in manuscript by Berkeley as *Darluca melasporum.* Cooke redescribed this fungus, giving it the name of *Strumella sacchari,* but stating that the origin of the canes was Australian. Saccardo shortly afterwards changed the name to *Coniothyrium melasporum,* and quoted the description incorrectly. Later, canes suffering from the "Maladie de la Gomme" were sent from Mauritius by Bonâme to Prillieux and Delacroix in Paris.[55] They identified the organism on these canes as *Coniothyrium melasporum,* attributing the disease to the most prominent characteristic. Another description is due to Ellis and Everhard[99] in Jamaica, who named the organism *Trullula sacchari.* About 1890, the cane known in the British West Indies as Bourbon became very sick, and this sickness received the name of Rind Disease. It is thus described in the Kew Bulletin :—[100]

> "Canes infected with rind fungus are first noticed by dark red or brown patches in one or two joints toward the middle or base of the cane. The red patch, having made its appearance, rapidly spreads upwards and downwards, the infected area darkens in appearance, and is evidently rotten. Little black specks make their appearance between the joints, breaking from the inside to the surface."

Another feature of the disease was that it only manifested itself in ripe cane shortly before harvest. Large areas ready for the cutlass would die and dry up in a few weeks, presenting the peculiar lesions. This condition was investigated at Kew by Massee, who ascribed the sickness to the most prominent characteristic, naming the fungus *Trichosphœria sacchari.*[101]

After the establishment of the Imperial Department of Agriculture for the West Indies, the cause of the sickness was examined on the spot by Howard.[102] He found two fungi on diseased cane, both of which he grew in pure culture. One of these was the *Colletotrichum falcatum,* associated with the red rot of the stem, and the other was a fungus to which the black erumpent hyphæ were due. This was only observed in the *melanconium* stage, and has since become known as *Melanconium sacchari.* By means of inoculation experiments made in hot-houses in England with pure cultures of the *Colletotrichum,* Howard obtained lesions characteristic of some phases of the disease, with the absence, of course, of the black hyphæ. In no case, however, did he obtain disease lesions or growth with inoculations of the *Melanconium* into healthy cane. When, however, the *Melanconium* was inoculated into canes already attacked by the *Colletotrichum,* growth followed with the appearance of the hyphæ. Very shortly afterwards an outbreak of rind disease occurred at the Georgetown Botanical Gardens. Specimens of these canes were sent by Harrison and Jenman to Howard,[103] and on them he found one fungus only, which he identified as *Diplodia cacaoicola,* known already as a parasite of the cacao tree. He showed that this fungus is an actual parasite capable of producing all the outward symptoms of rind disease when inoculated into healthy cane in pure culture.

In his publication on this subject he also brings forward evidence to show that *Darlucca melasporum* = *Strumella sacchari* = *Coniothyrium melasporum* = *Diplodia cacaoicola,* and that the fungus on the Mauritian canes suffering from the *Maladie de la Gomme* was actually the *Melanconium* fungus.

More recently the perfect stage of the *Diplodia* has been obtained by Bancroft and named by him *Thyridaria tarda.*[97]

On the other hand Johnston considers the *Darlucca, Strumella* and *Coniothyrium* as the same as the Melanconium.

Butler has also studied the *D. cacaoicola* in India as the cause of dry rot of the sugar cane. He regards the organism there as only mildly parasitic.

A third rind fungus, *Cytospora sacchari*[72] has been observed by Butler as parasitic on the cane in India, and later was found to be present also in the West Indies.

Two other fungi, *Melanconium saccharinum*[97] and *Nectria laurentiana*[98] are known to occur on the rind. Finally it may be mentioned that the macroscopic appearance of canes affected by *Gnomonia iliau* sometimes somewhat simulates that of rind disease.

Whether the *Melanconium* fungus is to be regarded as strictly saprophytic still remains in doubt. Cobb[81] in Australia took the view expressed in the following quotation :—

> "I believe that it is true in most cases, if not in all, this fungus requires the cane to be injured. Perhaps the frost so injures the arrow of the cane as to cause it to decay or die ; perhaps a borer makes its way into the cane, and thus breaks the rind ; or again perhaps the wind twists the stalk and cracks it, or the cane gets injured in any of the numerous possible ways ; then the fungus stands ever ready to take advantage of the accident, and in a few weeks' time makes such inroads as to send the whole cane well on the way to decay. . . . . The amount of damage done by spume is very difficult to estimate, There is no doubt that through its agency much cane, which otherwise would be saleable, is soon rendered worthless."

Afterwards, in Hawaii, he considered the organisms as distinctly parasitic, and to it he ascribed the frequent non-germination of cuttings. Lewton-Brain[104] also treats the fungus as parasitic, and indicates that although the hard outer rind is protective the fungus may enter through a wound, and in the case of a susceptible variety may bring about the death of the stalk.

The latest observations have been made by Stevenson in Porto Rico, and he seems to consider it parasitic under certain conditions, such as when the cane is weakened by drought or by excessive rainfall. He also observed the continual presence of the fungus on the leaf sheath, and a greater incidence on old cane and on young cane in fields of old ratoons.

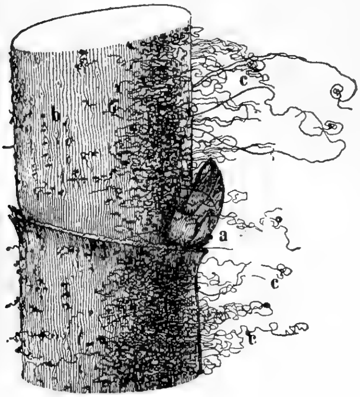

FIG. 64

Summing up these apparently contradictory observations, it may be said: 1. Rind fungus is a condition associated with diseased, dying and dead cane, characterized by the appearance on the stalk of black erumpent hyphæ. 2. This condition may be caused (*a*) by a single fungus, *Diplodia cacaoicola*, also described under various other names; (*b*) by the conjoint action of the *Colletotrichum falcatum* and the *Melanconium sacchari*. In this case the Colletotrichum lives in the interior pith, its action being localized by the protective action of the nodes to the infected joint. The Melanconium fungus entering the infected joint subsequently attacks the fibrovascular system, and shutting off the water supply causes the rapid death of the cane. 3. The mass of evidence indicates the non-parasitic nature of the Melanconium, though perhaps under certain conditions it may become an active parasite. 4. The exact causal agent of the past historic epidemics cannot now be exactly determined.

The technical descriptions of these fungi follow:—

Melanconium sacchari (Massee).—Conidia produced in pycnidia formed under the epidermis, unicellular, pale brown, cylindrical, straight or slightly curved. 14–15 × 3·5–4 microns.

Figs. 64 and 65 show a cane affected by this fungus, and the appearance of the spores.

Melanconium saccharinum (Penzig and Saccardo).—Acervuli hypophyllous, gregarious, arranged serially, oblong, 1 m.m. long, 0·15 m.m. wide, black, hysteroid erumpent; conidia large globose-compressed, 24 microns × 14; black, smooth, borne on slender filiform hyphæ.

Thyridaria tarda (Bancroft). — *Diplodia cacaoicola* (Henn.).—Perithecia in a single layer with several small ones often super-imposed, immersed in a black erumpent stroma with minute ostiole; asci cylindrical-clavate with eight spores, sessile, 90–100 × 12 microns; paraphyses 100–130 microns long, abundant, filiform; ascospores monostichous, oblong, fuliginous, triseptate, slightly constricted at the septa, 19–20 × 6–7 microns.

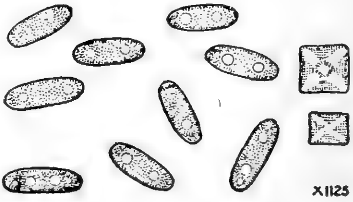

FIG. 65

Figs. 66 and 67 show, after Butler, a piece of cane infected with this disease and also the *Diplodia* spores.

Cytospora sacchari (Butler).—Stromatibus verruciformibus, seriatim ordinatis subcutaneo-erumpentibus, pluri-locularibus, nigris, osteolo elongato, singulo, rarius duobus præditis; sporulis minutissimis, cylindraceis curvulis, utrinque obtusis; 3·5 × 1·5 microns; basidiis ramosis, septatis, 12–18 microns. Hab. in culmis vaginisque sacchari officinarum India.

Figs. 68 and 69 show, after Butler, a piece of cane infected with this disease and also the spores.

Nectria laurentiana (Marchal).—Stroma somewhat broad, convex, superficial 1–2 m.m. diam. seated on a hyaline slender cottony, evanescent, at first free, later confluent white parenchyma ; perithecia densely cæspitose, globose or ovoid, 250–350 microns diam., strongly rugulose, even subsquamulate, ferruginous, glabrous, ostiole slightly dark, somewhat broad, membranaceous ; asci, 8-spored, oblong cylindrical, at lower end subsessile 60–70 × 7–8 microns ; aparaphysate ; spores in one series, oblong, equal-sided straight, at bottom end obtuse acute, 2-celled, constricted in the middle, rarely the lower end somewhat narrower ; 12–13 × 4·5–5 microns, epispore rarely subasperulate.

Diseases classed as Pathological Conditions.—Specific organisms have not been connected with two of the most important of cane diseases, as is also the case with "top rot," already described. The two conditions described below are known as "sereh" and as the "yellow stripe disease."

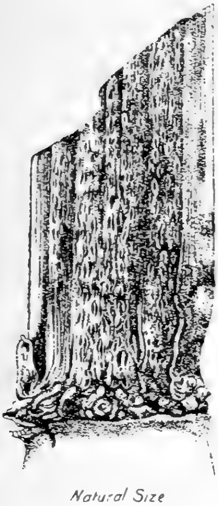

FIG. 66

FIG. 67

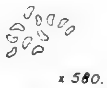

FIG. 68

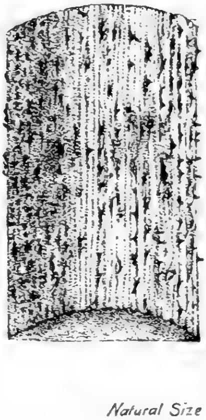

FIG. 69

Sereh.—This disease was first recognised as such in 1882 in Java, where it has done much harm. In the typical form of sereh the stool of cane consists of a number of short stalks with very short joints ; the buds, especially those below, sprout, whereby results a bundle of short stems hidden in a mass of leaves. The whole stool bears a resemblance to lemon grass (*Andropogon schœnanthus*), the Javanese term for which is "sereh." In a second type one or two stalks may grow to a fair size, with very many short joints in the upper part. Above all is a fan-shaped crown. Many of the eyes, especially those below, sprout and form small branches. Benecke[105] has given the following symptoms of the disease :—

1. A low, shrubby growth, often only from 3–4 centimetres.
2. A fan-shaped arrangement of the leaves arising from a shortening of the internodes.
3. The internodes are only from a half to two-thirds of an inch long.
4. The nodes are tinted red.
5. Numerous aerial roots are formed.

6. The fibrovascular bundles are tinted red.
7. Subterraneous outbranchings are formed.
8. The sheath and root buds turn vermilion.
9. In some cases there is no formation of wax on the stem.
10. The growing part of the stalk is frequently dyed red.
11. The leaf sheath and stalk stick together.
12. There is an accumulation of secondary organisms.

The presence of gum in sereh is a point about which much has been written. The major portion of opinion seems to be that the presence of gum is a consequence of and not directly connected with the disease, since, if the gum is of bacterial origin, the growth of the bacteria might only take place in cane already weakened by disease.

A red coloration of the fibrovascular bundles is a characteristic of sereh. This coloration is most pronounced at the node, but often appears in the internode as a red stripe.* This appearance is quite distinct from the red patch with white centre characteristic of the red rot of the stem.

The very large amount of work that has been done on sereh has up to the present failed to elucidate the cause of the disease, unless the identification by Wolzogen-Kühr with gumming is confirmed. Opinion is divided in ascribing the cause to physiological and to pathological causes. Amongst the first named have been suggested bad drainage, injudicious manuring, late planting, excessive ratoonage, an insufficiency of silica in the soil and degenerescence.

As regards parasites, Treub[106] ascribed the disease to the attacks of a nematode worm, which he named *Heterodera javanica*. Coinciding with the attacks of the worm he observed the presence of a fungus of the genus *Pythium*. Treub believed that the nematode penetrated the bark of the root at places of accidental injury or at the growing point, After having arrived within the root the worm worked its way parallel to the central axis until it arrived at the point of growth of a lateral root. Soltwedel[107] also attributed the damage to attacks of a worm, which he named *Tylenchus sacchari*, stating that the parasite passed its existence in the root, which it destroyed.

The connection between sereh and nematode worms is not now accepted. Janse[108] ascribed the cause of sereh to two organisms, *Bacillus sacchari* and *Bacillus glangæ*, and stated that these organisms attack plants other than the cane. He considered that the seat of the disease lay in the red-coloured fibrovascular bundles. The dependency of sereh on these organisms is not now accepted.

Went[109] considered sereh as a combined leaf sheath and root disease caused by an organism *Hypochrea sacchari*, the description of which is as follows :—

> Pulvinata, deinde depressa, carnosa, pallide fusca, stromatibus 2–4 m.m. lat. 1 m.m. crassis, saepe leviter collascentibus, intus pallentibus vel albidis, peritheciis fuscis, ostiolis vix prominulis, 200–500 × 150–200, ascis linearibus breve pedicellatis, 100 × 5, sporidiis monostichis 8, e cellulis duabus inæqualibus, mox decedentibus compositis, cellula superiori globosa 4 diam., cellula inferiori cuboidea oblonga 6 × 4, fumose olivaceis. Conidiis = *Verticillium sacchari.*

In *Fig.* 70 is shown, after Went, an ascus of the *Hypocrea* containing eight spores.

---

* A red striping of the sugar cane associated with the presence of gum has also been described by Greig Smith in Australia. This he ascribed to the association of an unidentified ascomycete with a slime-producing bacillus, to which he gave the name of *Bacillus pseudarabinus*.

As with the other causes the connection of this fungus is not accepted, and the general opinion seems to be that sereh is the manifestation of peculiar soil and cultural conditions, the organisms which have been observed only becoming prominent after the health of the cane has been affected. However, the very latest Java studies indicate that a connection may exist between sereh, gumming and yellow stripe.

The infectious nature of the condition is uncertain. The disease spreads from district to district in Java, and on the other hand healthy stalks planted in an infected field remained healthy. Whether infectious or not the disease was found to be passed on from plant to plant, that is to say sound seed gave sound canes, while seed from sereh-infected canes gave sereh-infected stalks.

The localization of the disease or not in Java is of great interest. It has been recognised definitely in Malacca, Bangkok and Borneo, and references to canes with the appearance of sereh in India, Australia, Mauritius, Porto Rico, Hawaii and Trinidad are to be found in the literature. Went observed canes in Surinam with all the symptoms of sereh, and noticed at the same time the presence of the *Hypocrea*, but in no instance outside of Java have the manifestations reached the epidemic stage, remaining rather as isolated instances in individual canes.

Yellow Stripe, Mottling Disease, or Mosaic Disease.—This is a condition which was first studied in Java. Lately (1916) the condition has reached the epidemic stage in Porto Rico,[110] and it is not unknown in Hawaii, Louisiana and Argentina. Canes presenting all the symptoms of yellow stripe may also be found in Cuba. The manifestations present themselves most conspicuously in the leaf, which, when viewed by transmitted light, presents a peculiar mosaic or mottled appearance due to spots of yellow colour. In cases of severe attack the spots coalesce to give the appearance of a yellow stripe. At the same time the joints of the cane exhibit a shrinkage, with the eventual appearance of gray cankers. Accompanying the manifestation is a diminution of the weight of the crop, but there is no decrease in the sugar in the affected portions. These results naturally follow on the immobilization of a portion of the leaf surface. The disease is progressive in that ratoon cane is more infected than is plant cane, and it is also hereditary, cuttings from infected cane transmitting the condition, and in this observation lies one of the means of control. Although no organism has yet been associated with the condition, it has been established that the disease is infectious. The latest view is that Mosaic is transmitted by sucking insects.

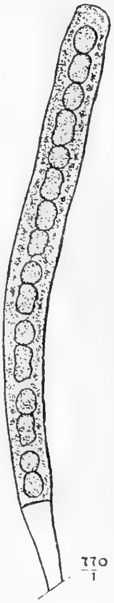

FIG. 70

Chlorosis.—Under certain conditions canes develop yellow stripes in the leaves due to absence of chlorophyll, and as a condition quite distinct from that described above. This condition occurs in soils containing a large quantity of calcium carbonate, and has been observed in Antigua, Barbados, Jamaica, Cuba and Porto Rico, where it has been studied as a serious condition by Giles and Ageton.[111] The condition is due to disturbance of the physiological functions of the plant, and may be temporarily remedied by applications of sulphate of iron to the leaf or to the soil. Areas in which it occurs are known in Antigua as gall patches or moonstruck canes, and

Tempany[112] has brought forward evidence to show that the condition is due to the combined action of chalk in the soil with sodium chloride carried to the surface from deep-level waters. This observation explains the dependence of the condition on season and the lack of correlation between quantity of limestone present and severity of attack.

The Control of Fungus Diseases.—The various methods by means of which fungous diseases may be controlled are discussed below.

1. *By the Selection of Immune Varieties.*—Of all the means available this is the most elegant, and, since the recognition of the fertility of the cane seed, a great part of the time of experiment stations has been devoted to this end. Organized cane breeding had its inception in Java, where the appearance of the sereh disease provided the stimulus. The pioneer in this work was Kobus, and he succeeded in obtaining a number of varieties which showed a high degree of resistance. In the British West Indies and in British Guiana also, Harrison and other workers have obtained canes that served to replace the older standard variety (Bourbon or Otaheite), which before 1890 had become subject to the rind disease. In cases of other epidemics, varieties already existing have served as substitutes for the infected variety. A complete survey of immunity as it affects the cane remains to be made, but certain isolated observations may be put on record.

The Otaheite cane (q.v.), one of the most desirable of all varieties, is also one which is very susceptible to disease, and has been the subject of several epidemics. From the time of its introduction into Mauritius by Bougainville till 1840 it formed the principal cane grown. It then became subject to an epidemic which at this space of time it is impossible to identify. Relief in this case was obtained by growing the Black Java cane, known in Mauritius as Belouguet. What is probably the same cane as the Otaheite was again extensively grown in Mauritius twenty years later as Louzier, and about 1890 this cane suffered from some disease. In this case relief was obtained by planting the White Tanna variety. In the British West Indies the Otaheite cane was grown almost exclusively from 1800 onwards, and about 1880 the first symptoms of the epidemic that became known as the rind disease (q.v.) were noticed. Resource was had to the White Transparent cane, and to seedlings as they were developed, and, though still grown, the Otaheite or Bourbon cane has never recovered its former position. Again in Pernambuco this cane suffered very severely in the 'sixties and the 'nineties from the gumming disease, which also attacked it in Cayenne in 1859. This variety has also been grown and attacked by disease in Madeira, Natal, and the island of Hawaii. More recently it has begun to fail in the other islands of the Hawaiian archipelago, where as Lahaina it had such a wonderful record. This failure seems, however, due to soil conditions rather than to a definite disease.

Erwin Smith[82] failed to infect the variety D 74 with inoculations of *Pseudomonas vascularum* to which gumming in other varieties is due.

The variety B 208 has been observed in the West Indies to be very susceptible to root disease.

Butler has observed that the reed-like canes of India are more susceptible to " smut " and more resistant to " red rot " than are the Paunda canes.

The cane H 333 possessed of otherwise very desirable qualities was found in Hawaii to be so susceptible to the leaf-disease " eye spot," caused by *Cercospora sacchari*, that the stem was affected, and the whole cane killed.

The Uba (Kavangire) cane in Porto Rico has been found to be quite immune to yellow stripe.

The reed-like canes of British India, e.g., Chunnee, were found to be immune to sereh, and were hence used as a parent in the early seedling work of Kobus.

2. *Plant Hygiene.*—Employ on the plantation only those methods of agriculture that tend to give a healthy condition to the plant. It is highly probable that many of the organisms connected with cane diseases are only weakly parasitic, and only become active when the plant is weakened by negligent agriculture. The remarks of Harrison[113] on this point are well worth quoting :—

> " I have personally never favoured the readiness so apparent of late years to refer almost every instance of decreased yield in cultivated plants to the noxious action of microbes or fungi. It appears to me for a long time back we have in the tropics rather neglected what I may call the physical and chemical hygiene of our cultivated soils, and have not paid sufficient attention to the soil conditions which may have materially reduced the naturally resistant powers of plants to the attacks of bacteria and fungi. And, further, I think that the susceptibility of certain kinds of plants, for instance the Bourbon cane, to injury by drought and fungus attacks is due in part at least to the defective conditions of soil hygiene, under which in places they are now cultivated."

3. *Rotation of Crops.*—It is highly probable that many of the cane epidemics have been aided by the wide-spread custom of growing cane continuously on the same soil. In this way the causal organism has a continuous habitat, and, being afforded opportunity for indefinite increase, may in time develop a strain of intensified virulence. When other plants are grown in rotation there is a period over which there is an absence of the host plant, when the fungus must tend to disappear in quantity, and more especially when it is an obligatory parasite of the host. It would appear that it is the fungi causing the various " root " diseases that would be most affected by this method of control, since in this case the soil itself becomes infected. As bearing on this is the observation that in the West Indies ratoon crops are known to be more liable to root disease than are plant crops. Apart from a rotation of crops a rotation of varieties might be utilised since the susceptibility of different varieties towards diseases varies widely.

It may also be called to mind that wheat grown continuously at Rothamsted has shown itself much more liable to disease than when rotations were practised.

4. *Use of Healthy Seed.*—This end can be obtained by careful selection, by growing seed cane in nurseries remote from infected areas, or by using, as seed, cane from parts of a plantation not affected. In Java, for example, it was found that cane grown in mountain districts and used as seed gave a certain degree of immunity to sereh, and an industry independent of the plantations proper has developed. It has also been found that the yellow stripe disease is hereditary, and may be controlled by the use of selected disease-free cuttings. As this disease is more of the nature of a pathological condition than a disease due to a specific organism, the method in this case would amount more to the selection of an immune strain. It would also be reasonable to hope that the continued selection of cuttings free from the causal organism of any disease might give an immune strain, as the healthiness of the particular cutting might in itself be due to immunity.

5. *Use of Fungicide Washes on the Seed.*—The exposed ends of cane cuttings form a most convenient point of entry for fungus spores, particularly for those of *Thielaviopsis paradoxa* causing the pineapple disease, and it is this organism more than any other which is responsible for the non-germination of cuttings. It has been shown by the experiments of Howard[114] in Barbados, and of Cobb in Hawaii, that soaking the cuttings in Bordeaux mixture preparatory to planting is a very efficient prophylaxis.

Bordeaux mixture is prepared as follows :—

Dissolve 6 lbs. crystallized copper sulphate in 25 gallons of water.

Slake 4 lbs. of quicklime in 25 gallons of water.

Gradually add the quicklime to the copper solution, with constant stirring ; when completely added test the mixture by immersing in it for a few seconds a bright steel blade. If the blade becomes coated with a red deposit of copper more lime must be added.

The time over which the cuttings should be left to soak is half an hour.

In addition to the use of Bordeaux mixture, the protection of the cut ends with tar has been proposed.

6. *Destruction of Disease Organisms.*—This method is broadly included as an underlying cause for the benefits to be obtained from a crop rotation. As applied more directly, the recommendations of Howard, Lewton-Brain, and Cobb for the destruction of the various root fungi by the application of heavy dressings of quicklime may be quoted. A second widely recommended procedure is the destruction of dead cane and trash. This procedure is, however, economically unsound as a principle in agricultural economics, and may even be obnoxious, considered in relation to insect control.

7. Avoid all practices such as high trashing that tend to injure the cane. This advice has been made with regard to such organisms as obtain an entrance to the stem through wounds.

8. Inspect and quarantine all cane received from foreign countries, and if such are allowed to enter, restrict the importation to one or two cuttings which may be subjected to a rigid inspection.

For more detailed accounts of the pests and diseases of the cane, reference should be made to the following :—

Van Deventer. " Die dierlijke Vijanden van het Suikerriet op Java."
Went & Wakker. " Die Ziekten van het Suikerriet op Java."
Prillieux & Delacroix. " Maladies des Plantes cultivées en Pays chauds."
Butler. " Fungi and Disease in Plants."
Archief voor die Java Suikerindustrie. (Soerabaya).
The *West Indian Bulletin.* (Barbados).
Memoirs of the Department of Agriculture in India.
Bulletins of the Hawaiian Sugar Planters' Association. (Honolulu).
The *Agricultural News.* (Barbados).
International Sugar Journal. (London),
Journal of Economic Entomology. (Washington D.C.)
Departmental Reports and Journals published in British Guiana, Trinidad, Queensland, Mauritius, Porto Rico, etc.

REFERENCES IN CHAPTER IX

1. Three Prize Essays on Cane Cultivation.
2. Histoire des Plantes de la Guyane Française.
3. A Treatise on Planting.
4. Natural History of Barbados.
5. In a publication of the U.S. Dept. of Agric.

6. *Haw. Pl. Mon.*, 1903, 22, 159.
7. The Voyages of Captain Cook.
8. Descriptio vermium in insulis Antillis, qui cannis sacchariferis damnum intulerunt.
9. A Descriptive Account of the Island of Jamaica.
10. Bulletin de la Société Philomathique, 1792, 1, 28.
11. Trans. Soc. Arts, 46, 143 ; 47, 192.
12. *W. Ind. Bull.*, 1899, 1, 327.
13. *Agric. Jour. of India*, 1908.
14. *S. C.*, 1873, 5, 477, 534.
15. *Agric. Gazette*, New South Wales, 1893, 373.
16. H.S.P.A. Ex. Sta., Ent. Ser., Bull. 7.
17. H.S.P.A. Ex. Sta., Ent. Ser., Bull. 5, 6.
18. Java *Arch.*, 1894, 2, 4 ; 1895, 3, 697.
19. *Insect Life*, 1888, 1, 11 ; *W. Ind. Bull.*, 1904, 5, 37.
20. *Insect Life*, 1892, 5, 45.
21; Annals of the Entomological Society of America, 1917, 10, 207 ; 1919, 12, 171.
22. Station Agronomique, Mauritius, Bull. 2.
23. *W. Ind. Bull.*, 1903, 4, 37.
24. *Haw. Pl. Mon.*, Nov., 1900.
25. *W. Ind. Bull.*, 1904, 5, 37.
26. Java *Arch.*, 1904, 12, 225.
27. Java *Arch.*, 1894, 2, 794.
28. *Magazine of Natural History*, 1833, 6, 407.
29. H.S.P.A., Ex. Sta., Ent. Ser., Bull. 1.
30. *Deutsche Entomologische Zeitung*, 1896, 40, 105.
31. *Proc. Entomological Soc. of London*, 1864, 51.
32. *Jour. Econ. Ent.*, 6. 247.
33. *W. Ind. Bull.*, 1902, 3, 240.
34. Porto Rico Ex. Sta., Bull. 1.
35. Java *Arch.*, 1900, 7, 1013.
36. Porto Rico Ex. Sta., Bull. 2.
37. The Sugar Industry of the United Provinces of Agra and Oude.
38. *S.C.*, 1892, 24, 253.
39. *S.C.*, 1881, 13, 434.
40. Mededeelingen uits' Lands plantentuin, 1885.
41. Mededeelingen van het Proefstation voor Mid Java, July, 1897.
42. *Jour. Agric. Research*, 4, 461.
43. *Proc. Roc. Soc.*, 1790, 80, 346.
44. U.S. Dept. Agric., Entomological Bull. 54
45. *Jour. Econ. Ent.* 6, 245.
46. *Jour. Econ. Ent.* 7, 444.
47. Annual Report, Dept. of Agric., Jamaica, 1915.
48. H.S.P.A., Ex. Sta., Path. Ser., Bull. 12.
49. *Phytopathology*, 1913, 3, 88.
50. U.S. Dept. Agric. Div. Plant Path., Bull. 16.
51. U.S. Dept. Agric., Year Book, 1901.
52. *Jour. Econ. Ent.*, 7, 455.
53. Java *Arch.*, 1896. 3. 487.
54. Report on parasites and injurious insects, Dept. of Agric., New South Wales, 1909.
55. *Boletin de Sociedad de Agricoltura*, 1909, 148.
56. *Jour. Econ. Ent.*, 6, 445.
57. Porto Rico Sugar Planters Ex. Sta., Progress Report, 1.
58. *Zeitschrift für Parasitenkunde*, 1869, 1, 13.
59. *Phytopathology*, 1913, 3, 363.

60. In a Bulletin (by Miyake) of the Formosa Experiment Station.
61. Anonymous Article, *Revue Agricole de Réunion*, 1901.
62. *S.C.*, 1894, 26, 372.
63. *Bull. Soc. Mycologique*, 11, 80.
64. *S.C.*, 1886, 18, 384.
65. *S.C.*, 1876, 8, 299.
66. From various Spanish publications.
67. Mededeelingen van het Proefstation voor West Java, 1890, 113.
68. ,, ,, ,, ,, ,, 1890, 574.
69. Memoirs, Dept. of Agric. in India, 1913, 6, 6.
70. Mededeelingen van het Proefstation voor West Java, 1890, 64.
71. Java *Arch.*, 1901, 9, 1015.
72. Memoirs, Dept. of Agric. in India, 1906, 1, 3.
73. Mededeelingen van het Proefstation voor West Java, 1893, 25
74. ,, ,, ,, ,, ,, 1893, 22.
75. Java *Arch.*, 1894, 2, 954.
76. Mededeelingen van het Proefstation voor West Java, 1890, 252.
77. ,, ,, ,, ,, ,, 1890, 13.
78. H.S.P.A. Ex. Sta., Path. Ser., Bull. 6.
79. Trans. Royal Soc. Arts and Science, Mauritius, 1849, 1, 20.
80. Mededeelingen van het Proefstation voor West Java, 1890, 252.
81. *Agricultural Gazette*, New South Wales, 1893, 777.
82. *Centralblatt für Bakteriologie*, 13, 729.
83. *S.C.*, 1894, 26, 589.
84. Java *Arch.*, 1919, 26, 527.
85. La Gangrena humida, Tucuman, 1895.
86. Java *Arch.*, 1893, 1, 178; 1895, 3, 674.
87, *An. Bot.*, 1903, 17, 373.
88. H.S.P.A. Ex. Sta., Path. Ser., Bull 8.
89. Memoirs Dept. Agric. in India, 1913, 6, 6.
90. Java *Arch*, 1893, 1, 372.
91. H.S.P.A. Ex. Sta., Path. Ser., Bull. 11.
92. Java *Arch.*, 1893, 3, 597.
93. *Mycologia*, 1896, 8, 115.
94. *W. Ind. Bull.*, 1918, 16, 289.
95. *Jour. Dept. Agric. Porto Rico*, 1917, 1.
96. H.S.P.A. Ex. Sta., Path. Ser., Bull. 2.
97. *W. Ind. Bull.*, 1918, 16, 283.
98. *Int. Sug. Jour.*, 1903, 5, 215.
99. *Jour. Jamaica Institute*, 1892, 159.
100. Kew Bulletin of Miscellaneous Information, 1895, 81.
101. *An. Bot.*, 1893, 7, 515.
102. *An. Bot.*, 1903, 17, 373.
103. *An. Bot.*, 1901, 15, 683.
104. H.S.P.A. Ex. Sta., Path. Ser., Bull. 7.
105. *S.C.*, 1892, 24, 209.
106. Mededeelingen uits' Lands Plantentuin, 1885.
107. Tijdschrift voor Land en Tuinbouwen Boschcultur, 1887, 1888.
108. Mededeelingen uits' Lands Plantentuin, 1891.
109. Java *Arch.*, 1893, 1, 23.
110. Porto Rico Ex. Sta., Circular 11.
111. ,, ,, ,, Bull. 15.
112. *W. Ind. Bull.*, 1918, 16, 137.
113. *W. Ind. Bull.*, 1911, 9, 36.
114. *W. Ind. Bull.*, 1902, 3, 73.
115. *Gardener's Chronicle*, 1869, 447.
116. *J. Dept. Agr. Porto Rico*, Jan. 1920.

CHAPTER X

THE HARVESTING OF THE CANE

At the present day almost the whole world's production of sugar cane is cut by manual labour. The tool used is the cutlass or machete, a heavy, broad-bladed knife, shown in *Fig.* 23. An expert cane cutter will cut, top, and throw a thousand pounds of cane per hour, or perhaps four tons in a working day.

The cutting of the crop forms an important item in the cost of production, and uses up a large proportion of the visible supply of labour, besides placing the owners at the mercy of an irresponsible population. Efforts to devise some mechanical means of cutting the sugar cane, such as is done with grain crops, have not been wanting, but up to the present definite success has not been obtained.

The means put forward fall into two classes—portable devices carried by the operator, and horse or power drawn and operated machines.

Amongst the first class may be instanced that of Paul, (U.S. patent 712843, 1902), consisting of a pneumatically operated reciprocating chisel-shaped knife, which is strapped to the arm of the cutter. The same method of cutting is used by Paxton (U.S. patent 1028486, 1912); in this case, however, the knife and its motor is mounted on a light-wheeled carriage propelled by the operator. In place of a reciprocating knife a circular saw mounted on a long handle and driven electrically through a flexible shaft is used in the Hylton-Bravo device (U.S. patent 733587, 1902). Two circular saws rotating in opposite directions are found in Hustace and Smiddy's patent (U.S. 1021605, 1912); in this apparatus the device is secured to one operator by means of a breastplate, a second operator directing the saws against the stalks of cane. No one of these devices has come into commercial use.

The larger types of cane cutters all seem to be based on the grain harvester invented by McCormack, which is an apparatus of world-wide use. In designing a sugar cane harvester, however, the following points add difficulty to the problem.

1. The material to be cut offers very great resistance compared with a grain crop.
2. The most valuable part of the crop is next to the ground level, and hence the crop should be cut level with the ground. But unless some margin is allowed there is continual risk of damage to the knives employed.
3. The crop of sugar cane is found not growing upright, but lying down in all directions. Before actually cutting, the stalks have to be raised from the ground.
4. In addition to cutting the stalk the cane has to be topped, and as the length of the stalks varies within wide limits a difficult problem is introduced.

5. A successful harvester would include means for stripping off the dry leaves and for cutting the cane into convenient lengths for loading into cars.

6. Long periods of ratoonage are often economically necessary in sugar cane cultivation. The transit of heavy machines over the fields may result in damage to the subsequent crop. With irrigated cane the damage to the water furrows would be excessive, and often the nature of the ground is such as would prohibit the use of heavy moving machinery.

The difficulties mentioned above have been considered and attacked by inventors, but up to the present no real success has been obtained. The cited machines are therefore not described here, but reference may be made to the following British and American patents:—*British.*—Henwood, 3023, 1868; Dollens and Zschech, 4456, 1882; Tomlinson, 4889 and 17289, 1887; Stickings, 18301, 1902. *American.*—Wilson, 415234, 1889; Le Blanc, 610069, 1898; Sloane, 724345, 1903; Dupuy, 753558, 1904; Gaussiran, 775168, 1904; Bolden, 813943, 1906; Ginaca, 853967 and 854208, 1907; Bercerra, 903666, 1908; Luce, 754788 and 762073, 1904; 788270, 1905.

Cane Loading.—After the cane has been felled, the next step is to load it on to the means used to transport it to the mill. Two distinct problems arise, first the loading of the cane into carts or small cars, running on a portable track in the cane fields, and second, the transfer of the load of cane from the cart to cars, which in Cuba, Mauritius and elsewhere run on public standard gauge railroads, and have a capacity up to 20 tons. This second operation is usually known as transferring rather than loading.

At the present day the greater portion of the world's sugar cane crop continues to be loaded by hand, and the mechanical devices which are in use are mainly confined to Louisiana. Only an indifferent measure of success considered economically has attended them in Hawaii. In Cuba the preliminary loading into bullock carts is always performed manually.

In countries where labour is very cheap, such as Java, there does not appear to be any prospect of saving from mechanical loading. A point in favour of hand loading lies in the increased capacity obtained by the closer packing of the material when hand loaded. With a *per diem* charge for carts and railway wagons irrespective of the load this item is of importance.

The main device employed consists of a portable derrick operating in combination with a system of chain slings, into which the cane is bundled, elevated over the car, and dumped therein by means of tripping devices. The earliest patent on this system seems to be that of Bennet (U.S. 506967, 1893). This system, as used in the Wheeler-Wilson loader in Hawaii, is shown from a photograph in *Plate* XIX. There are numerous other American patents dealing with details based on this method.

A second device consists of the grab, which is also operated from the end of a boom mounted on a portable carrier. This apparatus lifts up the cane from the heaps into which it is thrown by the cutters. The earliest patent on this scheme seems to be that of Lotz (U.S. 731923, 1903); but there are a number of other and later patents using this principle.

A third scheme found in a number of patents, of which the earliest seems to be that of Herbert (U.S. 645851, 1900), comprises the use of portable inclined endless belt conveyors, on which the cane is laid, carried upwards, and discharged into the trucks. A variant of this scheme is seen in Crozier's patent (U.S. 1025379, 1912), which employs an inclined run-way, up which is hoisted a small car sledge, which dumps its load into the railway truck.

THE WHEELER-WILSON CANE LOADER.

DUMPING FROM CART TO RAILROAD CAR IN CUBA.

PLATE XX

OX TEAM WITH CANE LOAD.

TRACTION ENGINE TRANSPORTING CANE.

A TYPICAL CANE TRAIN IN THE HAWAIIAN ISLANDS.

Although the direct loading of the cane has not been successfully accomplished, the transfer of the cart load to standard gauge railroad wagons is readily performed. In *Plate* XIX is shown, from a photograph taken in Cuba, a cartload of cane in the act of being dumped into a railroad wagon. A full load for a cart drawn by three yoke of oxen is 7,500 lbs., six of which loads go to fill the capacity of a standard gauge wagon. In order to obtain these capacities the cane is cut into six-foot lengths and carefully packed in the cart by hand.

Transport of Cane.—The methods adopted for the transport of cane from the field to the factory may be summarized thus :—

1. Animal power on roads.
2. Animal power on tramways.
3. Animal power on canals.
4. Mechanical traction on roads.
5. Mechanical traction on light railways.
6. Mechanical traction on public railways.
7. Aerial ropeways.
8. Fluming.

Animal Road Traction.—This method is now only used on small properties or on larger ones as a means of bringing the cane to a central loading station. The capacity of a mule on the roads usually to be found on plantations is about half a ton of cane at a speed of two miles per hour ; oxen are frequently used, and a typical team and load is shown in *Plate* XX.

Animal Tramway Traction.—The following data comparing the cost of mule transport on roads and on tramways[1] may be usefully given.

A tramway was constructed two miles long of 2-ft. gauge with rails weighing 14 lbs. per yard ; the average load in each car was 1,900 lbs., the train load averaging 11·25 tons ; this was drawn by two mules at a little over 3 miles per hour ; the capacity of a mule on a tramway may then be taken at from 15 to 20 times its capacity on a road.

Animal Canal Transport.—This method of transporting cane is used to the exclusion of other methods in Demerara and the Straits Settlements, where the estates are intersected with canals dug for this purpose. The punts used in Demerara are flat-bottomed receptacles, constructed out of wrought-iron plates with heavy wooden bottoms ; they are about 25 feet long by 8 feet wide and 3 feet deep, and hold from 2·5 to 3 tons of cane ; a mule will haul four of these punts at a rate of from 2 to 3 miles per hour. Water carriage is also employed in parts of Louisiana and of Australia.

Mechanical Road Transport.—Where good roads exist traction engines form a cheap and efficient means of transporting cane. In *Plate* XX is shown a view of such a scheme. An engine weighing 6 tons and of 20 h.p. will haul 20 tons of cane at a rate of three miles per hour.

Mechanical Railroad.—Undoubtedly the most important and efficient means of transport is a system of railways. The gauge adopted generally lies between 2 and 3 feet ; one of 2 feet 6 inches is very commonly employed, but for large properties it is more advantageous to have a gauge of not less than 3 feet, as otherwise the number of wagons required becomes excessive. With such a gauge wagons having a platform area of 50 square feet can be used ; such vehicles will hold from 2½ to 3 tons of cane, a perfectly safe rule being to allow half a ton of cane to every 10 square feet of platform area. A locomotive weighing approximately 15 tons will haul, at a rate of 10 to 12 miles per hour, twelve to fifteen wagons, each holding about 3 tons of cane.

The following data were obtained in Mauritius in 1904* :—The cost of laying down a system of railways to feed a factory is very considerable. The lowest cost per mile for a gauge of 2 ft. 6 in. is not less than £300, with rails weighing 18 to 20 lbs. per yard. For a 3-foot gauge, with rails 25 lbs. to the yard, an initial cost of £450 is the lowest which can be expected. These figures do not, of course, include the cost of locomotives and rolling stock. The cost of laying down the rails is entirely dependent on local conditions ; where these are favourable, and no expensive cuttings or bridges have to be made, a minimum cost of £100 per mile may be sufficient, an estimate to be greatly increased with unfavourable local conditions.

The following figures, taken from actual practice, will give much information regarding light railway transport :—

Acreage served	2050.
Miles of permanent track	48.
Gauge	3 ft. 1½ in.
Number of locomotives	6.
Weight of locomotive	15 tons.
Number of wagons	175.
Size of wagons	10 ft by 5 ft.
Load of wagon	2·75 tons.
Number of wagons per train	10.
Cane transported per 24 hours	900 tons.
Average distance of transport	4 miles.
Cane transported during crop	100,000 tons
Coal burned per ton-mile	4·70 lbs.
Maintenance of line and rolling stock per ton-mile	0·772*d.*
Fuel per ton-mile	1·536*d.*
Stores per ton-mile	0·160*d.*
Labour per ton-mile	0.740*d.*
Total cost of transport per ton mile	3·208*d.*

On all the larger plantations in the Hawaiian Islands 30-ton locomotives are used, capable of drawing a load of 300 tons of cane ; a typical cane train is shown in *Plate* XX.

Transport on Public Railroads.—In certain districts, notably Cuba and Mauritius, much of the crop is transported on the public railroads. This system is used very successfully in connection with cane farming, and allows of a large number of farms or colonias existing a considerable distance from the centrals. In Cuba the rates charged are expressed per metric ton per kilometre : 0–10 kms., 1·10 cents ; 11–25 kms., 0·6 cent ; 26–50 kms., 0·45 cent ; 51 and upwards, 0·30 cent. There is also a charge of 3·75 cents per day per ton capacity of the car. In Mauritius the rates were (1904) 10 cents of a rupee per ton per mile for the first, 8 cents for the second, and 6 cents for the third and following miles.

Aerial Ropeways.—As a means of transport in hilly or broken districts, notably in Mauritius, ropeways find some use. The following description of the ropeways often used in Mauritius is after Wallis-Tayler[2] :—

> " The arrangement consists of a driving gear at one end or terminal of the line fitted with a driving drum suitably geared to receive rotary motion which, in this instance, is provided by the power of the cane mill, and a similar wheel at the other end fitted with tightening gear, an endless band of wire rope being mounted on these wheels. At intervals of about 200 ft. intermediately between these terminals the rope is supported on pulleys mounted on posts at a suitable height to enable the carriers to clear all intervening obstacles, and to a certain extent also to regulate the general level of the line. The carriers hang from the rope and are enabled to pass the supporting pulleys by means of

---

*Present-day figures will be very different from what obtained then, but this section is included as it appeared in the first edition of this work, since some of the unaffected data are contained herein.

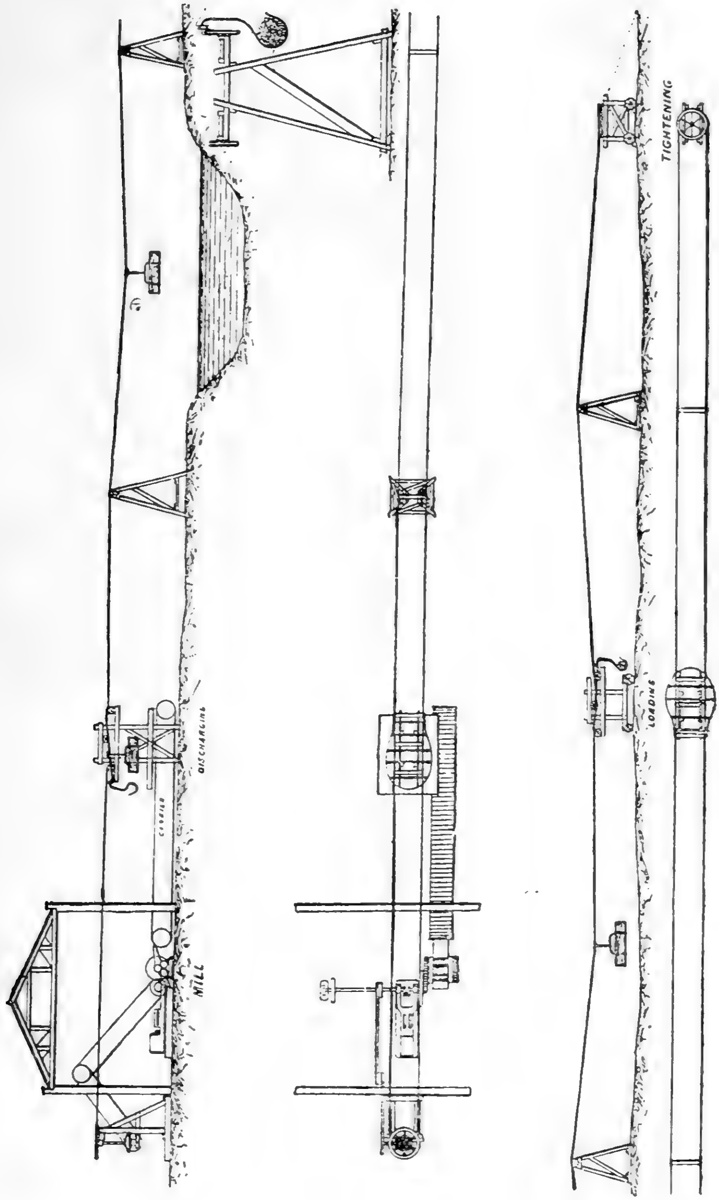

FIG. 71

> curved hangers. These curved hangers are pivoted on V-shaped saddles resting on the rope, the saddles having malleable cast-iron frames fitted with friction blocks to enable the requisite friction on the rope to be obtained, and allow the carriers to pass with the rope up steep inclines, and over the pulleys, wings at each end of the saddle frames embracing and passing over the pulley rims. The saddle frames are besides each fitted with two small wheels mounted on pins which admit of the carrier being removed from the rope at the terminals, and at curves, on to shunt rails held in such a position that when the carrier approaches the terminal the small wheels will engage on it, and running up a slight incline lift the friction clip saddle from the rope and enable it to pass to the loading or unloading station or round the curve wheels, the impetus derived from the speed of the rope being sufficient for the purpose of enabling the carriers to free themselves automatically from the rope."

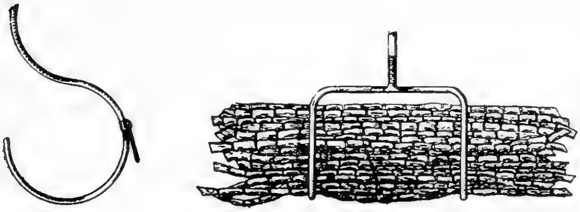

FIG. 72

Views of this scheme are shown in *Fig.* 71, and a view of the cradle in *Fig.* 72.

In some cases the configuration of the land will allow of a gravity system; in the simplest arrangement the loaded cradles run down a fixed rope and are afterwards packed back to the fields; in another system the descending load works an endless rope which also carries back the empty cradles.

Fluming.—Fluming is a method of transport used to a very considerable extent in the Hawaiian Islands. A flume consists of a wooden gutter of V-section. The material used is pine lumber, 1 in. × 14 in., and for ease of transport is made in 12 ft. lengths; vertical boards, 6 in. high, are fixed above the sides of the gutter. It is supported on light wooden framework, and ends directly over the end of the conveyor carrying the cane to the crushers. The canes are carried down the flume by means of a stream of water. In *Fig.* 73 is shown a view of such a flume. Approximately 1,000,000 gallons in 24 hours will flume 10 tons of cane per hour. Fluming is a most expensive method of transportation, and has been developed solely on account of some conditions peculiar to the Hawaiian Islands. These include factories located at or near sea level, steep gradients and the presence of ravines or gullies making railroading difficult, combined with an abundance of water. The weakest feature of a flume system is that it only operates in one direction, and separate means have to be adopted to carry supplies to the fields.

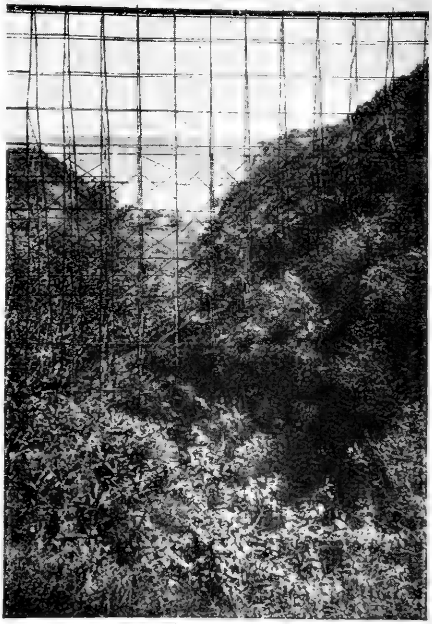

FIG. 73

Cane Unloading.—The cane after arrival at the factory is transferred by one or other of the means described below on to an endless belt slat conveyor, or is dumped into a hopper and elevated to the mill by an endless belt conveyor set at a steep angle. The conveyor is provided with broad curved teeth, which catch the tangled mass of material and prevent it slipping backwards.

The endless belt conveyor, usually called a carrier, as opposed to the elevator, is claimed in Patent 8731, 1840, granted to Robinson on behalf of unnamed parties. This patent includes means for cutting off steam from the engine when the thickness of the feed of canes is too great. The hopper and elevator appear first in Kiely's patent (U.S. 675222, 1901), and are indicated in *Plate* XXI.

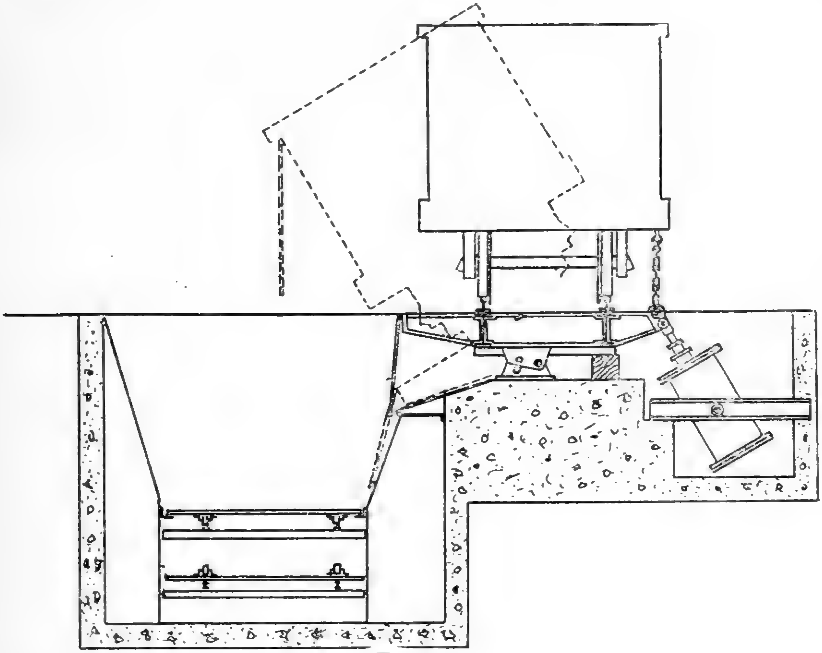

FIG. 74

The methods actually used are:—1. The hoist and dump. 2. The car dump. 3. The endless belt rake. 4. The reciprocating mechanical finger. The first patent on the hoist and dump is that of Carr (U.S. 517730, 1893), but that of Kiely (U.S. 675222, 1901) has been very extensively used in Cuba. This method, which is similar to the cart transfer, is indicated in *Plate* XXII. In using the hoisting device, chain slings are laid on the car previously to loading.

In Cuba the car dump is superseding the hoist and dump. This method is claimed in Sanchez' patent (U.S. 520271, 1894). In this device the cane is dumped into a revolving cylinder, which distributes the material to the carrier. This latter appliance has not come into use, and when the dump is installed the load is dropped directly into a hopper of the type shown in *Fig.* 74. The cane cars are provided with doors, swinging from the top. Alongside the hopper is arranged a platform, which pivots about a fulcrum, as indicated in the figure; at a certain angle the whole contents of the car slide into the hopper. This apparatus is usually found arranged as a side dump, but is also installed as an end dump. The power used may be hydraulic, a cable hoist being usually operated by an electric motor or spur and pinion gearing.

The endless belt rake was first patented by Mallon (U.S. 583408, 1897), and has been developed by other inventors. The form shown in *Fig.* 75 is that due to Gregg (U.S. patent 670176, 1901). In this device, which has been largely used in Hawaii, the triangular frame carrying the rakes is allowed to fall on to and to follow the load of cane. One side of the car has a drop side swinging from below and forming a bridge from car to carrier.

The reciprocating mechanical finger was patented originally by Walsh (U.S. 628877, 1899), and is indicated in *Fig.* 76. The mechanism allows a reciprocating motion, and one around the point of suspension of the beam. This appliance, which has also been developed by other inventors, is very extensively used in Hawaii.

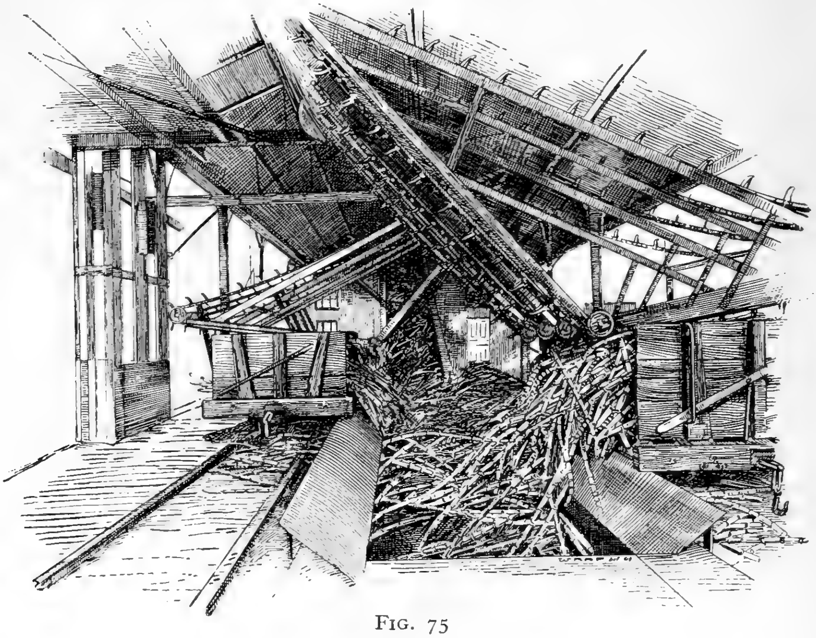

FIG. 75

The Deterioration of Cut Cane.—After sugar cane has been cut it begins to lose in weight through evaporation, and simultaneously a loss of sugar occurs through inversion. Evidently the rate of loss of weight will depend on the prevailing temperature and humidity. The rate of loss of sugar will also depend on the temperature, and will most certainly obey the laws of chemical change referred to in subsequent chapters, as is indeed indicated by combining the results of the experiments quoted below. The initial agent causing inversion of sugar is, as was shown by Browne and Blouin,[3] an enzyme that resides in the green top of the cane, and which after the stalk has been cut diffuses into the body of the cane. Experiments made by them in Louisiana gave the following results on canes that were " windrowed " or preserved for subsequent planting by burying in the ground. The duration of the test was one month.

PURITY OF JUICE.

Tops cut off	82·6	81·0	82·8	84·5	80·5
Tops left on	76·1	74·6	77·0	74·6	71·3

These results were confirmed in Argentina by Cross and Bielle,[4] who found after four days' keeping a purity of 62·81 in canes with tops cut off, as opposed to 48·77 in canes with the tops left on.

Pellet[5] in the winter months in Egypt obtained the following results on storing canes :—

Days.	Loss in weight per cent.	Purity of juice.	Days.	Loss in weight. per cent.	Purity of juice.
0	0	88·5	20	9·0	87·8
4	2·5	89·2	23	12·5	86·5
7	4·3	88·1	25	15·0	87·1
11	10·0	89·6	27	18·0	85·3
15	8·7	87·0			

FIG. 76

Von Czernicky[6] in Java found the results tabulated below :—

CANES KEPT UNDER COVER.			CANES ONE DAY IN OPEN, BALANCE UNDER COVER.		
Days.	Loss in weight per cent.	Purity.	Days.	Loss in weight. per cent.	Purity.
0	0	94·0	0	0	94·6
1	1·1	93·5	1	2·1	94·2
2	2·1	93·3	2	3·3	86·4
3	3·0	90·3	3	4·3	80·0
4	3·9	85·5	4	5·4	77·2
5	4·7	82·0	5	6·6	74·7

Weinberg[7] in India found :—

Days.	Available sugar.	Daily loss, per cent.	Total loss per cent.
0	100·0	0	0
1	97·3	2·7	2·7
2	92·0	5·3	8·0
3	78·6	13·4	21·0
4	67·9	16·7	32·1

In Java, Went and Geerligs[8] made the observation that, as long as the cells of the cane remained alive, there was no loss of sugar, and they were able to preserve canes unchanged in the laboratory for 25 days, where they were kept moist by covering with a wet sheet. Cross and Bielle[4] in Argentina obtained the following results, showing the effect of environment on cane deterioration :—

TREATMENT.	PURITY.
Fresh cane	73·02
Two days exposed to sun	63·81
Seven days sheltered	58·10
Seven days exposed to sun	49·30
Seven days covered with trash	69·83
Seven days covered with trash and watered	73·06

On the other hand, Barnes[9] has shown that with the proper conditions of temperature a ripening effect may take place in cut cane, followed eventually by a deterioration.

The results of the experiments quoted above will show how great may be the loss between cutlass and mill. With the modern great extension of plantations, entailing long hauls, and especially with the *colono* system, where a control over the harvesting of the crop is difficult, the loss tends to become exaggerated, and it is probably the largest individual source of loss in the whole economy of cane sugar production. There is no department where efficient organization and intelligent administration is more likely to be well repaid.

REFERENCES IN CHAPTER X

1. *S.C.*, 1886, 18, 400.
2. "Sugar Machinery."
3. La. Ex. Sta., Bull. 91.
4. *Int. Sug. Jour.*, 1915, 17, 218.
5. Etudes sur la Canne à Sucre.
6. Java *Arch.*, 1900, 8, 1600.
7. *Int. Sug. Jour.*, 1904, 5, 589.
8. Java *Arch.*, 1894, 2, 249.
9. *Agric. Jour. of India*, 1917, 12, 200

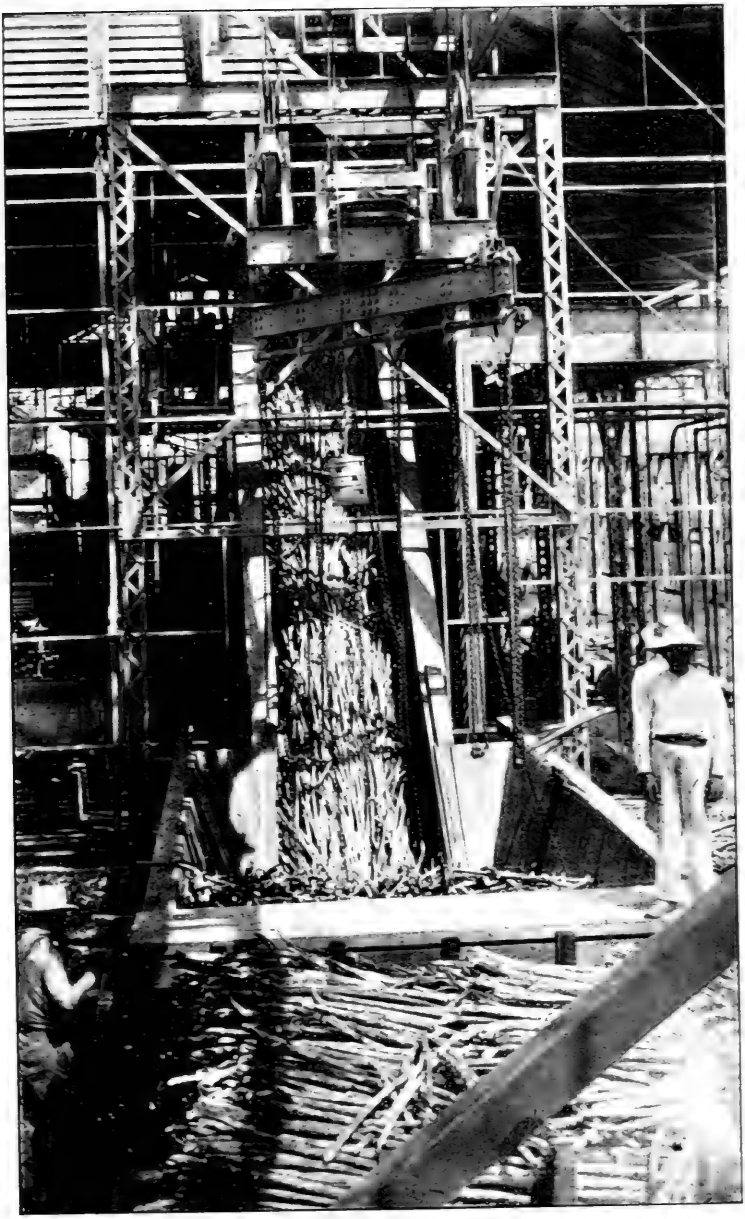

CANE HOPPER AND ELEVATOR.

PLATE XXII.

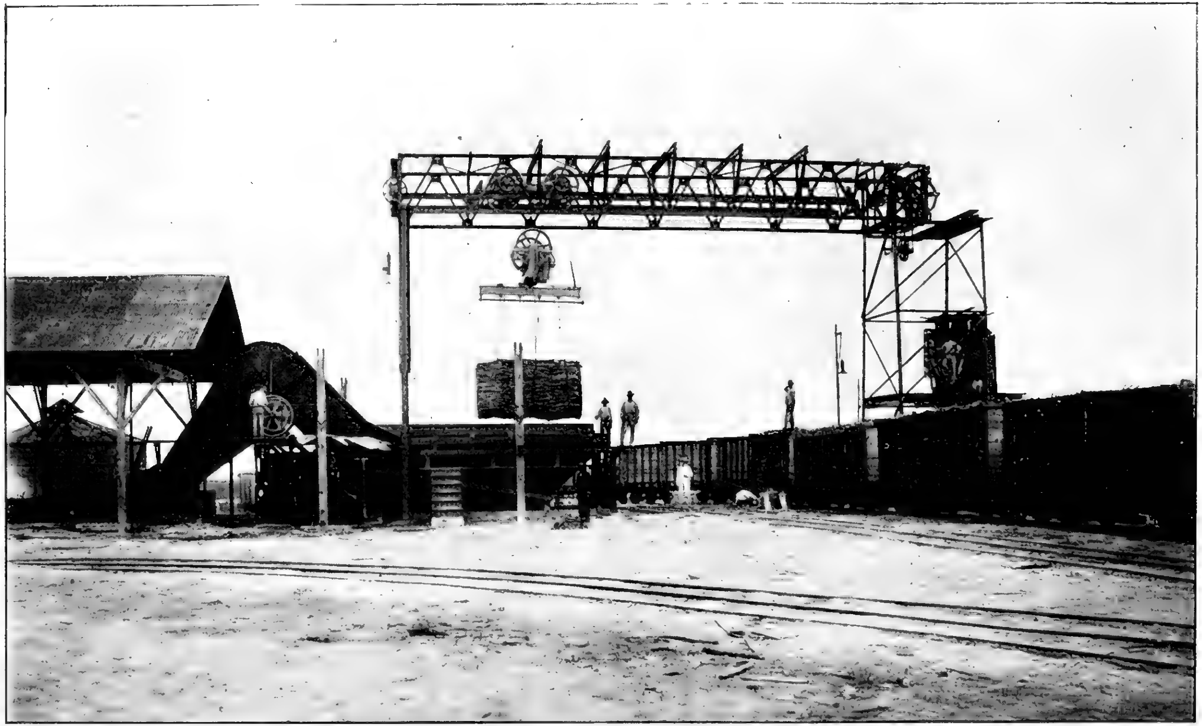

UNLOADING CANE WITH HOIST AND DUMP.

CHAPTER XI

THE EXTRACTION OF THE JUICE BY MILLS

THE process which has finally been adopted as the standard method for the extraction of the juice is one of repeated pressures exerted on the cane in its passage between horizontal rollers, which revolve about their longitudinal axes. The design of these apparatus has become standardized to an extent comparable with what has been arrived at in the case of, say, reciprocating engines; the differences to be found in various plants are chiefly in the number of units employed, in arrangement of details as in the methods of applying "maceration water," and in various accessories, several of which are of importance. In this chapter an attempt is made to give a connected account of the principles involved, of the chief types of mills, their combinations and accessories.

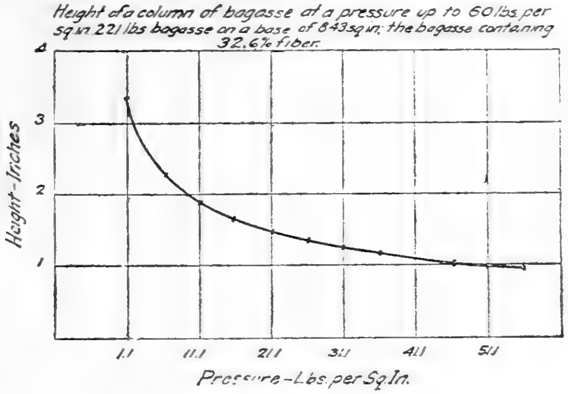

FIG. 77

The Raw Material.—In Chapter I is given a brief account of the botanical structure of the cane; from the point of view of the mill engineer, the cane may be regarded as a hollow cylinder, the walls of which are formed by the rind, the interior being filled with a soft cellular structure, the pith; the cylinder is subdivided into a number of smaller cylinders by transverse partitions, the nodes, which may also be considered as formed of rind tissue.

The material of which the rind and nodes is constructed is of a hard, woody nature and contains an impurer juice, which may conveniently be referred to as rind juice; the pith is of a softer nature, and contains a purer juice referred to as pith juice. Broadly then the cane may be divided into juice and fibre, including in the latter term everything which is not water or is insoluble in water; the fibre and juice may again be subdivided into rind tissue and pith tissue and into rind juice and pith juice; from another point of view the cane may be divided into node and internode or into pith, rind and node. The writer found the distribution of these divisions of the raw material to be as follows[1]:—

Variety.	Rose Bamboo.	Y. Caledonia.	Lahaina.	Lahaina.	Y. Caledonia.
District.	Oahu.	Oahu.	Oahu.	Maui.	Kauai.
WHOLE CANE.					
Weight per cent. cane	100·00	100·00	100·00	100·00	100·00
Juice per cent. ...	87·12	84·91	86·25	88·40	84·45
Fibre per cent. ...	12·88	15·09	13·75	11·60	15·55
Soluble solids per cent.	14·70	15·83	16·03	20·10	17·92
Sugar per cent. ...	13·25	13·04	13·28	18·14	15·36
Water per cent. ...	72·12	69·08	70·22	68·30	66·53
PITH.					
Weight per cent. cane	74·28	66·90	72·45	61·77	67·15
Juice per cent. ...	91·90	90·43	90·11	94·78	91·22
Fibre per cent. ...	8·10	9·87	9·89	5·22	8·80
Soluble solids per cent.	15·93	17·34	17·45	22·21	19·62
Sugar per cent. ...	14·80	15·06	15·11	21·11	17·52
Water per cent. ...	75·97	73·09	72·66	72·57	71·60
RIND.					
Weight per cent. cane	9·57	15·27	12·28	14·34	15·80
Juice per cent. ...	62·11	65·92	72·73	69·98	64·92
Fibre per cent. ...	37·89	34·71	27·27	30·02	35·08
Soluble solids per cent.	9·38	11·52	11·54	15·40	13·87
Sugar per cent. ...	6·46	7·44	7·50	11·10	10·00
Water per cent. ...	52·73	53·77	51·19	57·58	51·05
NODE.					
Weight per cent. cane	16·15	17·83	15·27	23·89	17·05
Juice per cent. ...	79·98	80·40	78·78	82·80	75·97
Fibre per cent. ...	20·02	19·60	21·22	17·20	24·03
Soluble solids per cent.	12·22	13·86	12·88	17·43	15·07
Sugar per cent. ...	10·14	10·27	9·22	14·62	11·83
Water per cent. ...	67·76	66·54	65·90	65·37	60·90

Referred to a juice basis, these results appear as below :—

Variety.	Rose Bamboo.	Y. Caledonia.	Lahaina.	Lahaina.	Y. Caledonia.
District.	Oahu.	Oahu.	Oahu.	Maui.	Kauai.
ABSOLUTE JUICE.					
Weight per cent. cane	87·12	84·91	86·25	88·40	84·45
Solids per cent. ...	16·87	18·52	18·59	22·72	21·22
Sugar per cent. ...	15·22	15·35	15·39	20·52	18·19
Purity	90·22	82·94	82·79	90·32	85·71
PITH JUICE.					
Weight per cent. cane	68·26	60·49	65·49	58·62	61·24
Solids per cent. ...	17·33	19·17	19·37	23·43	21·49
Sugar per cent. ...	16·10	16·65	16·76	22·27	19·20
Purity	92·90	86·85	86·53	95·05	89·29
RIND JUICE.					
Weight per cent. cane	6·04	10·06	8·91	10·00	10·26
Solids per cent. ...	15·08	17·41	15·87	22·00	21·37
Sugar per cent. ...	10·40	11·29	10·30	15·86	15·40
Purity	69·10	64·85	64·91	72·09	72·10
NODE JUICE.					
Weight per cent cane	12·82	14·36	11·85	19·78	12·95
Solids per cent. ...	15·28	17·24	16·29	21·05	19·83
Sugar per cent. ...	12·68	12·77	11·70	17·66	15·57
Purity	82·98	74·07	71·81	83·90	78·50

When all these results are combined into their simplest form, that is to say, when the cane is expressed as consisting of a soft part (pith) and a hard part (rind and nodes), the average results appear as below :—

Whole Cane.	
Weight per 100 cane ...	100·00
Fibre per cent.	13·7
Solids per cent.	17·1
Sugar per cent.	14·8
Pith.	
Weight per 100 cane ...	77·0
Fibre per cent.	8·0
Solids per cent.	18·5
Sugar per cent.	16·7
Rind and Nodes.	
Weight per 100 cane ...	23·0
Fibre per cent.	33·0
Solids per cent.	12·3
Sugar per cent.	8·5

Absolute Juice.	
Weight per 100 cane ...	86·3
Solids per cent.	19·8
Sugar per cent.	17·1
Purity per cent.	86·4
Pith Juice.	
Weight per 100 cane ...	70·8
Solids per cent.	20·2
Sugar per cent.	18·5
Purity per cent.	90·3
Rind and Node Juice.	
Weight per 100 cane ...	15·5
Solids per cent.	18·3
Sugar per cent.	12·7
Purity per cent.	69·1

In the analyses quoted above the solids are "refractive solids," the sugar is determined by single polarization, and the purity is refractive polarization purity. The fibre is determined by difference.

These analyses, it must be remembered, are qualified by the personal equation of the operator ; and absolute separation into rind and "pith" cannot be made, since these divisions pass gradually into each other. The writer has also observed as a general rule that a high percentage of fibre is associated with a high proportion of rind tissue.

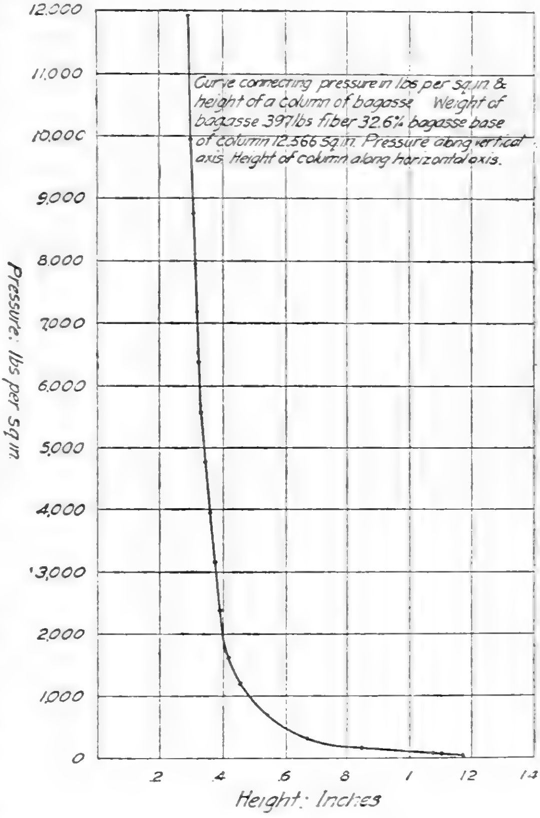

FIG. 78

The Behaviour of Cane Fibre on Compression.—In the following section fibre is used in its broadest sense and refers to the insoluble matter of the cane ; that is to say to an indefinite mixture of rind tissue and pith tissue. As the process of the extraction of juice is largely one of exposing cane fibre to great pressure, the writer made an experimental study[2] of the behaviour under pressure of cane fibre, represented by chopped cane and by bagasse. The experiments were made in the following manner :—The material was placed in a cylindrical iron pot with a perforated bottom. By means of a tightly fitting plunger known pressures were applied to the material, the weight and composition of which was known. For each pressure observations of the volume occupied by the material, or, in certain experiments, of the volume of juice expressed, were made. Certain of the results are given below, the connection between quantity of material used and the quantity of cane milled in a given time being found as follows:—A 78-in. mill worked at a peripheral speed of 25 ft. per minute describes 23,400 sq. in. in one minute. If in one hour 100,000 lbs. of cane with 12 per cent. fibre are milled, 200 lbs. of fibre correspond to 23,400 sq. ins. of roller surface. In certain of the experiments the area of the material exposed to pressure was 8·43 sq. ins., so that the quantity to correspond with the milling of 100,000 lbs. of cane with 12 per cent. of fibre per hour would be $\frac{8\cdot43\times200}{23400}$ = 0·072 lb. fibre. The results obtained showed:—

1. The quantity of juice expressed increased with the degree of fineness to which the material was divided.

2. Material which had been once pressed up to a certain pressure was allowed to expand and then repressed to the same pressure; four pressings were required before all the juice capable of extraction at the selected pressure was obtained.

The experimental data connecting the above two observations are given below. The material used was chopped cane, varying in fineness from 0·25 inch cube to a fine meal. The tables are arranged with the coarsest material at the left. All pressures at 4,740 lbs. per sq. in.; 0·882-lb. cane is used, corresponding to 147,000 lbs. per hour, in 78-in. mill at 25 ft. per min. These results may be interpreted as indicating that fineness of division and repeated pressings are of more importance than a smaller number of pressings at largely increased pressures.

	Juice obtained % on original material.	Total percentage obtained.	Juice obtained % on original material.	Total percentage obtained.	Juice obtained % on original material.	Total percentage obtained.	Juice obtained % on original material.	Total percentage obtained.	Juice obtained % on original weight.	Total percentage obtained.
First pressing	58·3	58·3	59·0	59·0	62·3	62·3	64·0	64·0	64·4	64·4
Second ,,	8·5	66·8	8·8	67·8	8·8	71·1	9·9	73·9	12·0	76·4
Third ,,	5·8	72·6	6·0	74·8	3·9	75·0	4·7	78·9	2·6	79·6
Fourth ,,	2·8	75·4	2·4	76·2	2·0	77·0	1·6	80·2	2·0	81·0

3. The quantity of juice expressed increased as the quantity of material used decreased, as indicated in the data given below.

All Pressures 4,740 lbs. per Sq. Inch.

Weight of Cane—lbs.	Equivalent in lbs. per hour in 78-in. mill at a surface speed of 25 ft. per min.	Percentage of Juice obtained.	
		1	2
1·763	244,000	63·40	62·90
1·323	184,000	65·75	65·75
0·881	122,000	68·50	67·60
0·440	61,000	69·50	68·70
0·220	30,500	74·00	70·00

The results may be interpreted as favouring a high speed and a thin blanket of material.

4. Under pressures up to 60 lbs. per sq. in. it was found that the volume occupied by bagasse varied inversely as the 2·5th root of the pressure, or symbolically $V P^{.4}$ = constant, where V is the volume of the bagasse and P is the pressure. If the bagasse be pressed in a cylinder, H, the height of the column of bagasse under pressure may be substituted for V. Data of an experiment are given below, the results being also expressed as a curve in *Fig.* 77.

HEIGHT OF 0·221 LB. BAGASSE, CONTAINING 32·6 PER CENT. FIBRE, ON A SURFACE OF 8·43 SQ. INS., CORRESPONDING TO 100,000 LBS. CANE CONTAINING 12 PER CENT. FIBRE PER HOUR, AT A SURFACE SPEED IN ROLLERS OF 25 FT. PER MINUTE IN A 78-IN. MILL, UP TO PRESSURES OF 60 LBS. PER SQ. IN.

Pressure lbs per sq. in. = P.	Height. inches = H.	$H.P.^{.4}$
1·1	3·358	4·90
6·1	2·238	4·51
11·1	1·889	4·96
16·1	1·658	5·01
21·1	1·467	4·99
26·1	1·333	4·92
31·1	1·283	5·09
36·1	1·183	4·96
41·1	1·100	4·85
46·1	1·039	4·80
51·1	0·989	4·77
56·1	0·944	4·74

5. At higher pressures, 1,000 lbs. per sq. in. and upwards, the volume of bagasse varied inversely as the 5th root of the pressure, or symbolically $H P^{.2}$ = constant. Data of an experiment are given below, the results being also expressed as a curve in *Fig.* 78.

0.397 LBS. BAGASSE CORRESPONDING TO 120,000 LBS. OF 12 PER CENT. FIBRE CANE PER HOUR IN 78-IN. MILL, AT A SURFACE SPEED OF 25 FT. PER MIN.

Pressure lbs. per sq. in. = P.	Height. inches = H.	$HP^{.2}$	H^5P
31	1·79	3·97	983·0
83	1·10	2·65	131·0
162	0·845	2·37	73·7
321	0·67	2·12	43·0
480	0·53	1·85	21·7
640	0·52	1·90	24·7
703	0·50	1·89	24·2
1193	0·465	1·90	24·7
1595	0·42	1·84	21·1
2390	0·39	1·85	21·7
3137	0·37	1·86	22·3
3972	0·36	1·82	19·9
4778	0·35	1·91	23·2
5574	0·34	1·90	24·7
6369	0·33	1·9	25·2
7166	0·32	1·89	24·2
7980	0·315	1·90	24·7
8757	0·31	1·91	25·2
10347	0·305	1·93	26·5
11940	0·30	1·97	29·7

At higher pressures the volume of juice expressed from chopped cane varied as the twentieth root of the pressure, or symbolically $J P^{-.05}$ = constant, where J is the volume of the juice expressed.*

---

*In my original publication I gave the volume as varying with the twelfth root. In commenting on these results Bolk[3] observed that the twentieth root gives a much more constant value.

Details of an experiment are given below, the results being also plotted as a curve in *Fig.* 79 :—

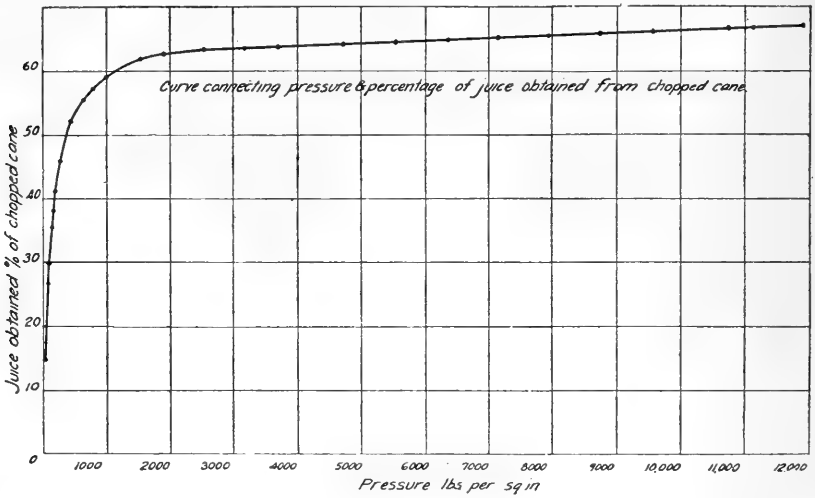

FIG. 79

Volume and Weight of Juice and Volume of Residue obtained on pressing 3·410 lbs. Chopped Cane up to 11,940 lbs. per Square Inch.

Pressure lbs. per sq. in. $=P$.	Volume of Juice c. in. $=J$.	Weight of Juice % on Cane.	Volume of Residue c. in. $=R$.	$J+R$	$RP^{\cdot 2}$	$JP^{-\cdot 05}$
68	13·2	14·8	75·5	88·7	176	...
83	13·1	20·3	70·0	88·1	169	...
104	23·7	26·5	63·4	87·1	160	...
123	26·6	29·8	60·2	86·8	158	...
162	31·5	35·2	54·1	85·6	150	...
203	34·1	38·1	50·9	85·0	147	...
242	36·6	41·0	47·6	84·2	143	...
321	41·0	45·9	42·6	83·7	135	...
406	43·7	50·9	40·1	83·8	133	...
480	46·0	51·5	37·1	83·0	130	...
640	49·6	55·9	33·5	83·2	122	...
800	51·3	57·4	32·1	83·3	122	...
1000	53·3	58·6	30·8	84·1	122	37·7
1193	53·7	60·1	29·8	83·4	122	37·6
1595	54·9	61·4	28·6	83·5	125	37·8
1993	55·5	62·1	28·2	83·7	129	37·8
2390	56·2	62·9	27·6	83·8	131	38·0
3187	56·5	63·3	27·1	83·6	136	37·7
3972	57·2	64·0	26·6	83·8	140	37·7
4778	57·6	64·5	26·2	83·9	142	37·5
5574	57·8	64·7	26·0	83·7	146	37·3
6369	58·0	64·9	25·7	83·7	148	37·3
7166	58·3	65·3	25·5	83·8	150	37·2
7959	58·4	65·4	25·2	83·7	151	37·2
8757	58·9	65·9	24·9	83·7	153	37·2
9555	59·0	66·1	25·5	83·5	153	37·1
10747	59·6	66·7	24·0	83·5	154	37·2
11145	60·0	67·1	23·7	83·7	153	37·3
11940	60·2	67·3	23·5	83·7	152	37·3

In the table above is also given the volume of the residue, R, and values of $R\,P^{\cdot 2}$.

The curves given in *Figs.* 78 and 79 are the converse of each other; in both, the curve begins to bend from the horizontal or the vertical at about 500 lbs. per sq. in. pressure, and assumes the vertical or horizontal at about 2,000 lbs. per sq. in. pressure. After this pressure has been reached, great increases in pressure are accompanied by relatively very small increases in the volume of juice expressed and by very small decreases in the volume of the bagasse or cane fibre.

The writer does not wish to be understood as expressing the opinion that these relations are absolute; they are rather of the nature of approximations, and probably the real relation is of the form $VP^{f(P)}$ = constant, the exponent increasing as P increases.

Work done and Power absorbed in compressing Bagasse.—Allowing that the relation, H^5P = constant, represents the behaviour of bagasse on pressure, the work done in passing from a volume V_1 to a volume V_2 is

$$\int_b^a K\,H^{-5}\;d\,v$$

Consider the case of a column of bagasse on a base of 1 sq. in. and 0·6 inch high, which is to be compressed to 0·25 inch high. Then the work done in compressing is

$$\int_{\cdot 25}^{\cdot 6} K\,H^{-5} = \frac{K}{1-5}\left(0\cdot 6^{-4} - 0\cdot 25^{-4}\right)$$

In the experiment quoted previously the value of $H^5\,P$ is about 9·5, so that the value of the integral in this particular instance is 590·1 inch-lbs. or 49·2 foot-lbs. A 78-in. mill describes 23,400 sq. in. in one minute, and grinds 100,000 lbs. of cane with 12 per cent. fibre in one hour. The work done in one minute is then 49·2 × 23,400 = 1,151,280 ft.-lbs., which requires $\frac{1{,}151{,}280}{33{,}000} = 35$ *H.P.*

This result, of course, refers to the actual work done in one compression according to the observed data, and does not include the work represented by friction, transmission of power, etc.

The work done in compressing fibre under the equation, $H^5P = K$, is independent of the way the pressure is applied. In *Fig.* 80 let n = the specific normal pressure on a small particle of bagasse, and let t be the specific tangential pressure causing uniform motion of the particle. Then the condition of equilibrium of the particle of bagasse is

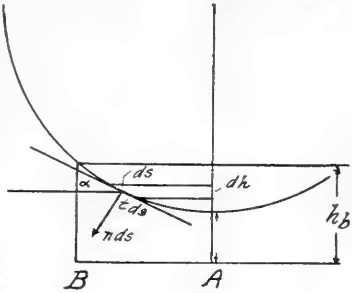

FIG. 80

$$\int_A^B t\;ds\cos\alpha = \int_A^B nd\;s\sin\alpha$$

If α is small, $\cos\alpha = 1$ and

$$\int_A^B t\;ds = \int_A^B n\;ds\sin\alpha.$$

But since $ds \sin \alpha = d\,h$

$$\int_A^B t\,ds = \int_{h_a}^{h_b} n\,dl.$$

If v is the peripheral speed of the roller, the work done in a unit of time is $w = v \int_A^B t\,ds = v \int_{h_a}^{h_b} n\,dl$

$$= \frac{K\,v}{4}\left(h_a^{-4} - h_b^{-4}\right)$$

That is to say, the work done in the compression of cane fibre is independent of such factors as the curvature of the rollers, the size of the mills, etc.

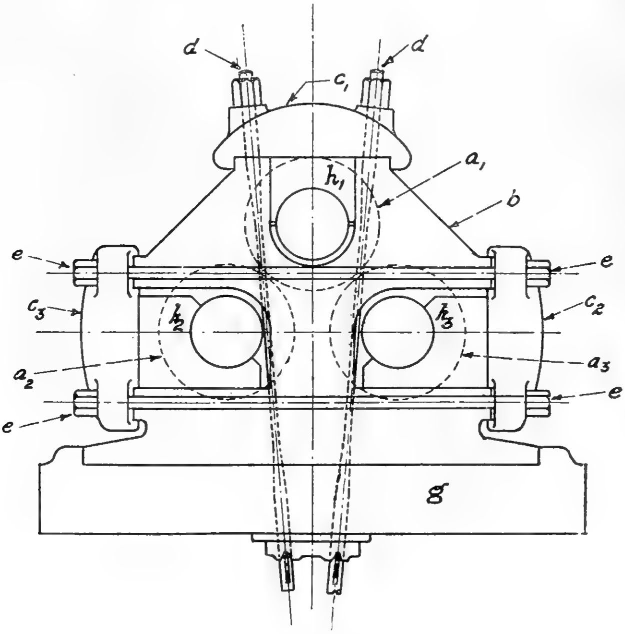

FIG. 81

The power required, however, will vary with the skill of the designers and of the operators. The work done in compressing bagasse is also independent of the method used; for example, direct pressure in a cylinder by means of a plunger, or by means of rolling mills, as is the means adopted in practice for the application of power.

Relation between Fibre per cent. in Bagasse (Efficiency) and Tonnage milled (Capacity and Power required).—In the immediately preceding section on certain experimental observations, the power required to compress 100,000 lbs. of cane, with 12 per cent. fibre, in a 78-inch mill describing 23,400 sq. in. per minute to a layer 0·25 inch high was estimated at 35 H.P.

To compress the same quantity to 0·20 inch will, under this general law, and under exactly the same condition as in that computation, require

$$\int_{\cdot 20}^{\cdot 60} 9\cdot 5 \times 0\cdot 20^{-5} = \frac{9\cdot 5}{1-5}\left(0\cdot 60^{-4} - 0\cdot 20^{-4}\right) = 1467$$

inch-lbs., or 87 H.P., as compared with the 35 H.P. found before.

Similarly, if the relation $H^5P = 9\cdot 5$ hold to so high a limit, the ultimate pressure on the layer of bagasse will be $P = \frac{9\cdot 5}{0\cdot 2^5} = 29{,}687$ lbs. per sq. in., whereas when $H = 0\cdot 25$, P is only 10,000 lbs. per sq. in.

Under the very high pressures it was found that each diminution in the volume of the bagasse was accompanied by an equal volume of juice expressed. Consider a column of bagasse on a base of 1 sq. in. and 0·25 inch high, and let this quantity of material contain 0·00855 lb. fibre and 0·00855 lb. juice, i.e., 50 per cent. fibre and 50 per cent. juice. Let the column of bagasse be compressed to a height of 0·20 inch, then it will contain 0·00855 lb. fibre and 0·00670 lb. juice, taking the 0·05 cu. in. of juice expressed as weighing 0·037 lb. That is to say, the bagasse will now contain 56·0 per cent. fibre and 44·0 per cent. juice.

On this argument the following table may be constructed, referred to the same basis as before, namely 100,000 lbs. of cane, with 12 per cent. fibre per hour, in a 78-inch mill describing 23,400 sq. in. in one minute.

Height of column of bagasse inches, H.	Pressure.	Horse Power necessary for one compression.	Fibre % in bagasse.
0·20	29700	87	56·0
0·21	23200	71	54·6
0·22	18300	59	53·4
0·23	14700	49	52·2
0·24	11900	41	51·1
0·25	9700	35	50·0
0·26	7990	30	49·0
0·27	6590	25	47·9
0·28	5500	22	46·9
0·29	4610	19	46·0
0·30	3910	16	45·1

An idea of the variation in the composition of the bagasse with variation in the quantity of cane milled, the power remaining the same, may be obtained as under. In the preceding section it was estimated that 590·1 inch-pounds were required to compress a column of bagasse 1 sq. in. section and 0·6 inch high to a height of 0·25 inch, and on compression the bagasse was taken as containing 50 per cent. fibre and 50 per cent. juice. Let twice the quantity of bagasse be compressed, the original height being 1·2 inches; let x be the height to which this quantity of bagasse can be compressed by 590·1 inch-pounds: then $\int_{x}^{1\cdot 2} 2^5 \times 9\cdot 5\, H^{-5} = 590\cdot 1$

whence $x = 0\cdot 602$.

This height of the column of bagasse corresponds to a height of 0·301 inch, when the quantity of cane milled is 100,000 lbs. per hour, and when in this case the column of bagasse was 0·25 inch high it contained 50 per cent. fibre, there being 0·00855 lb. fibre and 0·00855 lb. juice. With a height of 0·301, and remembering that for each decrease in the volume of the bagasse an equal volume of juice is expressed, there will be 0·00855 lb. fibre and 0·01070 lb. juice, making the percentage of fibre 45·1. Hence under the general equation $H^5P = k$, as expressing the behaviour of bagasse on compression, it follows that doubling the quantity of material and expending the same work, the fibre in the compressed material falls from 50 per cent. to 45·1 per cent.

The writer does not wish to be taken as meaning that the numerical values selected are necessarily accurate, though he believes they are of the general order of what occurs in practice. They are introduced chiefly to give a concrete expression to the formulæ deduced from experiment. Three points stand out, however, upon which reliance can be placed: First, great increases after a certain limit in the hydraulic load on mills will not be accompanied by any but small differences in the composition of the bagasse; secondly, after the fibre content of the bagasse reaches a certain figure a very great consumption of power is required to further reduce it; and, thirdly, very great increases in the quantity of cane milled are not accompanied by very large differences in the composition of the bagasse. In other words, the capacity of a milling plant, between the limits of what is considered reasonably good work and the very best work, is very great; that is to say, a milling plant is a very elastic machine.

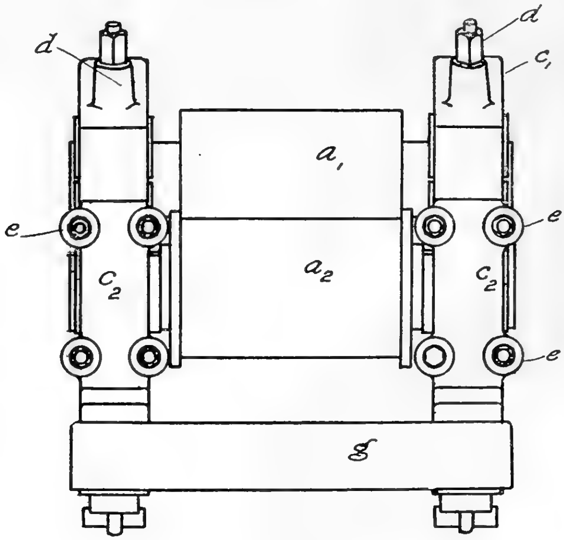

FIG. 82

Power required to mill Cane.—With the results discussed above may be compared others giving the indicated horse-power developed by mill engines in actual operation, as found by the writer.[12]

CANE CARRIER, CRUSHER AND MILL, 34-in. × 78-in., WORKING AT RATE OF 50 SHORT TONS CANE PER HOUR WITH 12·7% FIBRE, WITH HYDRAULIC LOAD OF 400 TONS.

Indicated H.P.		H.P. per ton-cane-hour.	H.P. per ton-fibre-hour.
Max.	218	4·36	34·3
Min.	166	3·33	26·2
Mean	184	3·68	28·9

THREE MILLS AS ABOVE (2ND, 3RD AND 4TH).

Indicated H. P.		H. P. ton-cane-hour-mill.	H. P. ton-fibre-hour-mill.
Max.	443	2·95	23·3
Min.	332	2·21	17·4
Mean	372	2·48	19·5

The Cane Mill.—The machinery employed to express the juice of the cane by milling consists of a system of horizontal cylinders, any two co-acting units of the system being caused to rotate in opposite directions by means of suitable gearing. The mill proper has by this time been reduced to a standardized 3-roller pattern (shown in side and end elevation and in plan in *Figs.* 81, 82 and 83), characterized by the location of the centres of the three rollers a_1, a_2, a_3, at the angles of an isosceles triangle. The rollers are carried on shafts, axles, or gudgeons, which are in turn supported on brasses, h_1, h_2, h_3, in frames, *b*, placed at either end of the rollers. These frames are known as housings, headstocks, or cheeks, and rest on the sole plate *g*.

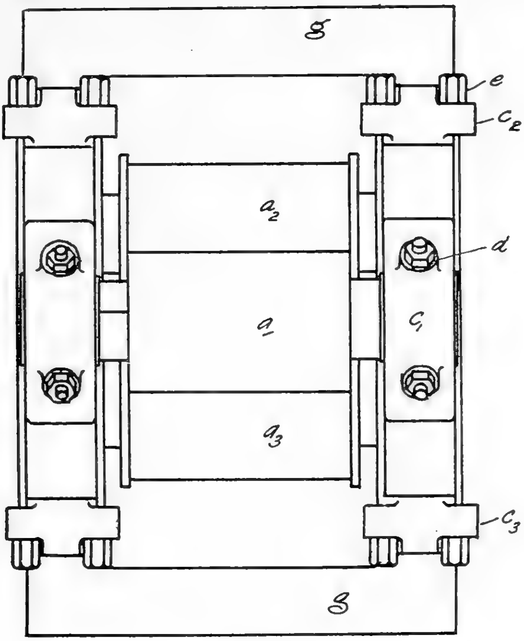

FIG. 83

The rollers are restrained in position by means of caps, c_1, c_2, c_3, bearing on the brasses, directly or through distance pieces, the caps being secured to the housings by bolts. Those bolts, *d*, passing through the top cap are known as the king bolts, thoroughfare bolts, through-way bolts, or top-cap bolts; those, *e*, securing the side caps are known as the side-cap bolts. On one end of each shaft, and sometimes on both ends, is fitted a toothed wheel or pinion. The shaft carrying the roller, the centre of which corresponds with the apical angle of the isosceles triangle, receives motion through a train of gearing and connecting shaft from some prime mover.

The pinion on the end of this shaft co-acts and gears with the pinions on the shafts of the lower rollers. The lower rollers then will rotate in the same sense, and in a sense opposite to that in which the upper roller rotates; the direction of rotation, clockwise or counter-clockwise, depending on the direction in which the material being crushed travels. The upper roller, *a*, is known as the top roller; that lower roller, a_2, which first receives the material is known as the front, feed or cane roller; the other roller, a_3, is known as the back, discharge or bagasse roller.

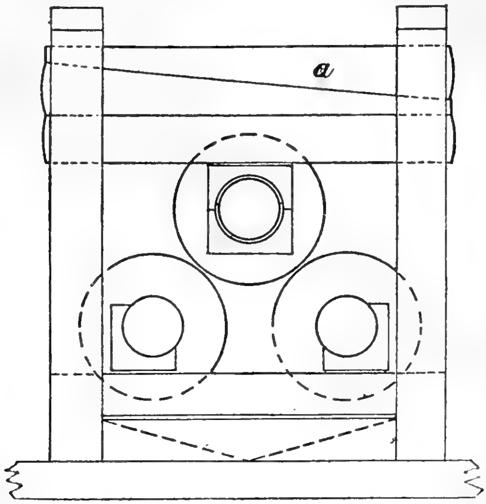

FIG. 84

Reference to *Fig.* 81 shows that there is formed a space between the lower rollers where it is necessary to define a passage for the material until it is gripped by the top and back rollers. This passage is defined by the lower portion of the top roller and by a bar of varied shape and curvature supported on the housings and running parallel to the axes of the rollers. This bar is known as the trash turner, returner bar, dumb returner, knife, bagasse bridge or bagasse guide, and, to avoid confusion, is not shown in *Fig.* 81.

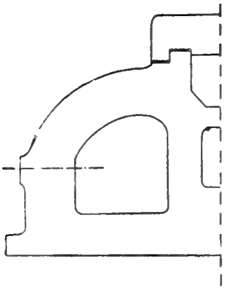

FIG. 86

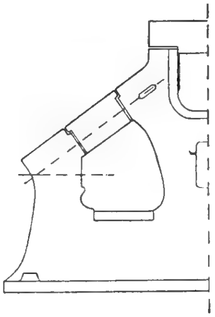

FIG. 85

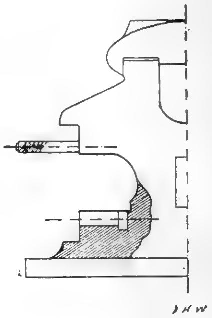

FIG. 87

The exact arrangements employed by different firms show considerable variation, and designs derived from and different from the isosceles combination are found, as well as others with quite a different origin. These variations will be described presently, together with some account of the preparatory devices and the accessories to a milling plant.

The Development of the Three-Roller Mill.—Pressure of some sort has been used from primitive times in order to extract juice from the cane. Perhaps the earliest method is that which is still used by the autocthons of South America, and until recently by the ryots of British India. This method is based on the pestle and mortar, the latter element being furnished with a hole in the bottom, whence the juice drains. A hollowed tree stump is often utilized as the mortar.

The earliest extant account of sugar manufacture is to be found in the *Gesta Dei per Francos*, written in the twelfth century, and here is mentioned a screw press of some nature as being used by the Saracens in the Levant in the extraction of juice.

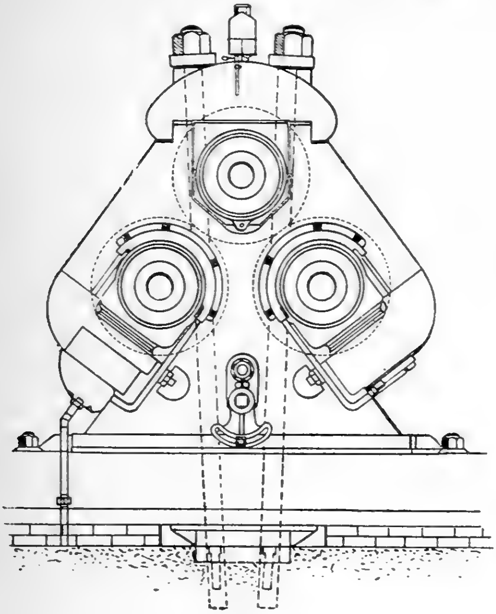

FIG. 88

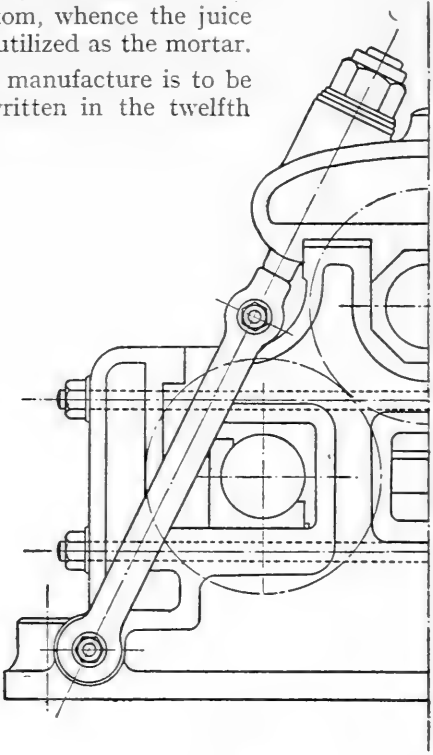

FIG. 89

Willughby,[4] in the seventeenth century, describes a cane mill, evidently developed from an early type of corn grinder as used in Spain. It consisted of a wheel rotating about its axis and also about the end of a shaft attached to itself. The path of the wheel was a circular perforated gutter, in which the cane was laid. He also saw mills of two horizontal wooden rollers covered with iron plates.

The roller mill was used in India at a very early date. A report prepared by officials of the Hon. East India Co., of date 1822, shows two types. In one the rollers are vertical, and are provided with co-acting spiral gears carved out of hard wood; in the second the rollers are horizontal and each is rotated independently of the other by manual power through wheels with long radial arms. The first mill of three rollers was made in Sicily in 1449 by Pietro Speciale. This type of mill was used by Gonsales de Velosa in 1506 in the first factory erected in the New World, at Rio Nigue, in San Domingo, and by old writers is often described as of his invention. It consisted of three rollers, either horizontal or vertical, with their centres co-linear. Similar ends, and in the latter case upper ends, of the shafts carried coacting pinions, the centre roll being selected for receiving the drive, which was taken from an overshot water-wheel, a windmill, or from horse, cattle or slave power, moving in a circle at the end of a long beam. This type of mill remained in use for many years; it is illustrated in Fleming's patent (1057, 1773), which contains in addition (and forming the subject of the patent) a supplementary roller of smaller diameter and a wooden bar set oblique to the roller, the combination serving to direct the once crushed cane to the line of contact between the centre and discharge rollers. This patent contains the genesis of the trash turner. In the old West Indian houses the mill itself was often located below the ground level, as more convenient for the application of animal drive. These mills were known as pit mills.

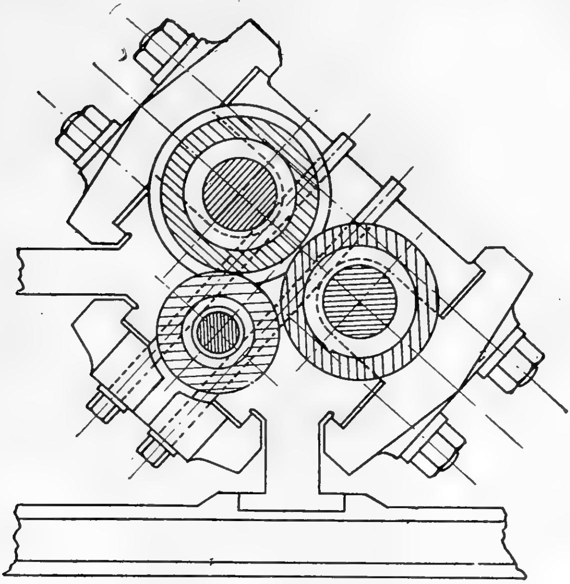
FIG. 90

Steam power was first applied to mills in 1769, this date being fixed by a reference in a paper[6] read before the Royal Society by the Marquis de Cazaux in 1780, stating that eleven years earlier a steam engine had been sent to Jamaica. Steam power did not become common, however, till much later; its introduction into Demerara and Surinam took place in 1815, due to the initiative of a Dutch carpenter, Forster.[7]

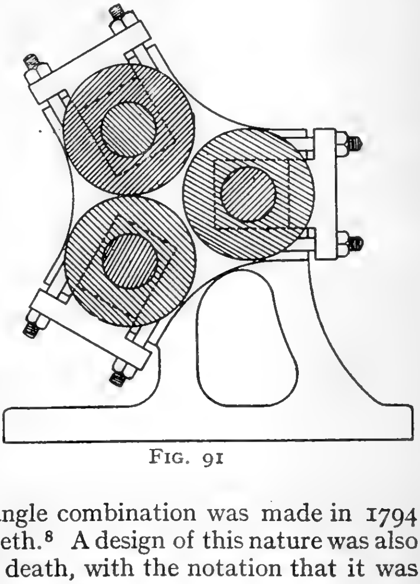
FIG. 91

The first mill with the isosceles triangle combination was made in 1794 by Collinge, an axle-tree maker of Lambeth.[8] A design of this nature was also found amongst Smeaton's papers at his death, with the notation that it was designed in 1754 for a certain Gray in Jamaica, but not executed.[9] To the mill as arranged by Collinge the trash turner, as now understood, was added very early in the nineteenth century by Bell, a Barbados planter.[8]

The original form of housing (which may be still seen in Brazil) was made of wood, the top cap of the modern mill being represented by the massive tripartite yoke, *a*, *Fig.* 84, king bolts being absent, so that the system in a way anticipates the boltless all-steel housing of recent introduction.

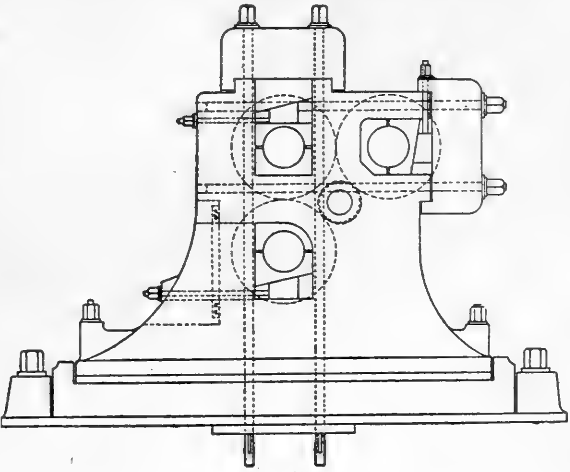
Fig. 92

The next development took the form indicated in *Fig.* 85. In this design the rollers were removed by lifting after the removal of the distance piece. This type of housing is ill adapted for resistance to the horizontal component of the angular thrust, and fracture was frequent along that line, although some additional security was given by the tie-rod passing through the distance piece.

Another form of housing of early date is shown in *Fig.* 86. This type is found illustrated in early American patents, and has been made by French houses, but does not ever appear to have been tried by Scotch firms. It had the disadvantage that the removal of a roller necessitated the canting over of one of the housings.

Buchanan's patent (1574 of 1858) claims the form of headstock identical with that now generally employed. This type is shown in *Fig.* 81, and is referred to as the open-side gap type, one of the patent claims being for the removal of the rollers horizontally by sliding without the necessity of lifting. This patent also introduces the side caps, *Fig.* 81, bearing on the brasses of the lower rollers and serving to retain them in position. These side caps were recessed into the housing, and in Buchanan's design were secured thereto by wrought-iron tie-rods or bolts running in a direction *parallel* to the direction of the axes of the rollers. Buchanan's patent also claims the building up of the housing from wrought-iron plates bolted together, but the different functions of wrought and cast-iron in tension and compression in a cane mill housing had been previously described by Mirrlees, in his patent, 13689 of 1851.

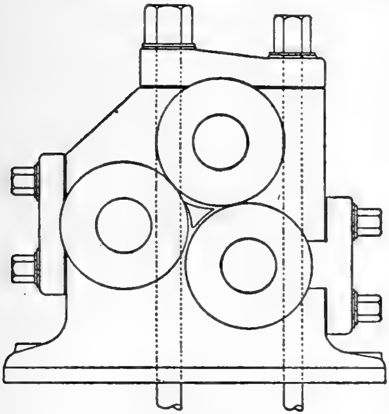
Fig. 93

Rousselot (patent 790 of 1871) adopted Buchanan's form of housing, with the direction of the side cap tie-bars turned through a right angle, so that they pass into the housings in which they were secured by cottar pins, a method changed by Watson (patent 1606 of 1871) to T-headed bolts recessed into the housing, and indicated in *Fig.* 87. Fletcher's patent (316 of 1877) shows the side-cap bolts as continuous from cap to cap, and this method is most generally employed.

The Housing and Arrangement of the Rollers.—There are many designs which, while retaining the isosceles triangle arrangement of the rollers, depart from the horizontal side gap or Buchanan type of housing. Walker (patent 1486 of 1860) cast the housing so that the rollers rested on surfaces perpendicular to the line joining the centres of the top roller and of a lower roller. This arrangement, which prevents any horizontal movement of the lower rollers, is also found in the designs of Wilson (patent 2754 of 1861), of Bartlett (2656 of 1878), of Thoens (U.S. patent 615591, 1898), of Boyer (U.S. 976144, 1910), and of McNeil (patent 11727 of 1912). It also appears in the mill known as the Hamilton mill, shown in *Fig.* 88. This arrangement is also the type indicated in Stewart's patent (3269 of 1871), dealing with the application of hydraulic pressure to cane mills.

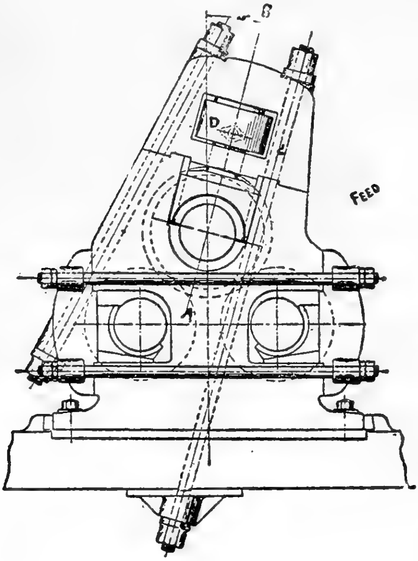

TYPE 1.

FIG. 94

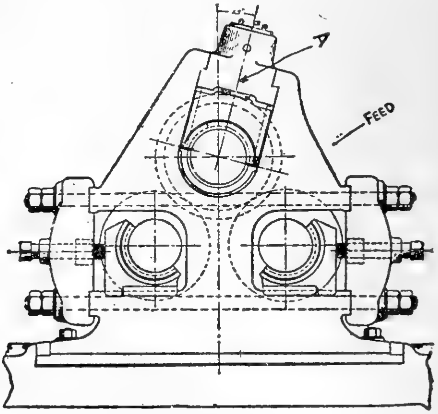

TYPE. 2.

FIG. 95

A mill with the king bolts following the lines joining the centres of the top and of a lower roller was patented by Fletcher (316 of 1877), *Fig.* 89. A somewhat similar design was patented by Buchanan and Keay (233 of 1884), and again many years later by Delbert (U.S. 880332, 1905). Housings and roller arrangements very different from the standard pattern are illustrated in the designs of Allan (patent 18800 of 1888), *Fig.* 90; of Hatton (11729 of 1889), *Fig.* 91; of Skekel (U.S. 480522, 1892), *Fig.* 92; and of Alliott and Paton (11524 of 1897), *Fig.* 93.

Of these mills, those of Allan and Hatton dispense with the trash turner, that of Alliott and Paton reduces its width, and that of Skekel replaces it with a corrugated roller. The rotary trash turner applied to a standard form of housing also appears in a patent of Fletcher (14562 of 1891).

As is explained in detail later, the pressure between the top and the back roller of a mill is much greater than that between the top and the front roller; consequently the top roller is thrust against the jaw of the top gap on the feed side. The first attempt to compensate for this unequal strain is seen in Hall's inclined housing, *Fig.* 94, the king bolts being arranged parallel to the supposed resultant of the forces acting on the top roller.

In Hedemann's design (U.S. patent 1016301, 1914), *Fig.* 95, compensation for the side thrust is also attempted, with the addition that a variable position of the resultant is allowed, this position being determined by trial and error. Bolk's design (13471 of 1912), *Fig.* 96, leaves the two lower rollers rigid and allows for the adjustment of the top roller in a vertical and a horizontal direction by means of wedges above, below, and on the sides of the journal bearings. The king bolts pass outside the bearings, and the rollers are driven by an idler pinion.

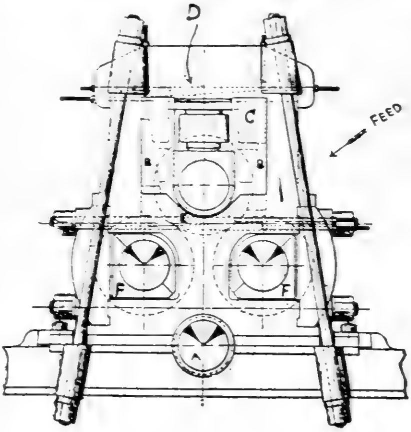

FIG. 96

In *Fig.* 97 is shown Fogarty's mill (U.S. 535577, 1895), which replaces the ordinary housing with a circular framing.

Mill Rollers.—The mill rollers consist of a shaft, upon which is fixed a shell forming the roll proper. *Fig.* 98 shows in half section a common type of top and bottom rollers. In modern practice the shaft, *a*, is forced into the shell, *b*, in an hydraulic press, permanency of attachment being secured by contact and by a key. To prevent juice entering between the shaft and the shell, juice rings seal the opening. The inner ring, *c*, is put on in halves, and over it is shrunk on an outer ring, *d*. The top roller is supplied with flanges to prevent bagasse being extruded sideways. The flange may be a part of the roller as shown, but is better bolted to the shell, so that the upper and lower rollers may be interchangeable.

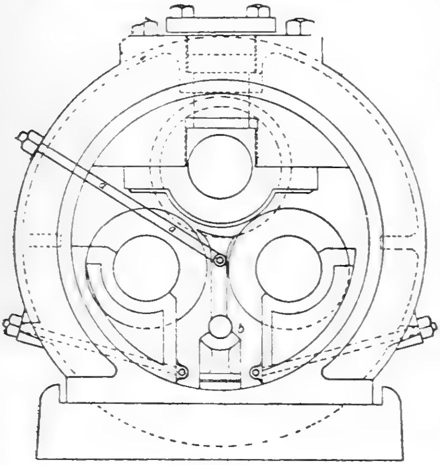

FIG. 97

The wear and tear of the shells forms a large item in the upkeep of a mill. In place of renewing the whole shell, a common practice in Hawaii is to remove a four-inch ring from the shell, and to shrink on a new outer part, which is further secured to the remainder of the shell by dowel pins. As the new portion wears down it may again be renewed.

The size of rollers has become standardized in six-inch lengths, from 36 inches to 84 inches; the corresponding diameters extend from 24 inches to 42 inches, but diameters over 36 inches are very exceptional. A metric size which is very common in localities where French firms have been active is 800 mm. by 1600 mm.

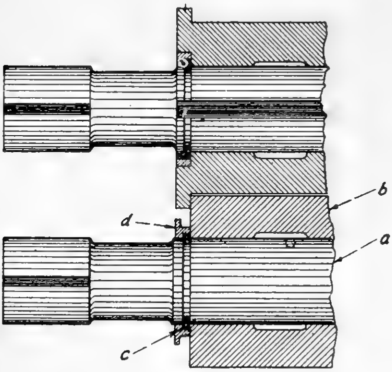

FIG. 98

The King and Side Cap Bolts.—The arrangement of the king and side cap bolts varies in different patterns. To each top cap there may be four top cap bolts, between which pass the side cap bolts; or the positions may be reversed, there being four side cap bolts carried on either side of a housing, between which pass two king bolts. All these arrangements are included in McOnie's patent (2444 of 1877). Fletcher's patent (13397 of 1893) arranges either the king bolts or the side cap bolts with slots, so as to allow one to pass through the other.

The arrangement adopted in the majority of mills as now built is to cause the king bolts to converge from above so as to meet at a point a little below the bedplate, as indicated in *Fig.* 81. This arrangement is specifically claimed in Chapman's patent (10469 of 1894), its object being to diminish the width of the trash turner and to obtain accommodation for larger journals without increase of the apical angle. A similar result is obtained by adopting the form shown in *Fig.* 99, and also by flattening the bolts, as claimed in Aitken's patent (14647 of 1897).

Any influence of the king bolts on the trash turner is eliminated by the use of U-bolts recessed into the housing, as indicated in *Fig.* 100. This arrangement is due to McOnie (patent 2444 of 1877), but it is usually known as Stillman's, from his patent (10369 of 1900). Similar in its effect on the removal of interference with the trash turner is the use of T-headed bolts, the heads of which co-act with the housing and terminate at a location above the trash turner. These designs, which call for the use of steel housings, permit of the bolts being placed as far apart as desired, whereby a ram of wide diameter can be accommodated in the top cap, allowing a decreased intensity of hydraulic pressure on the ram.

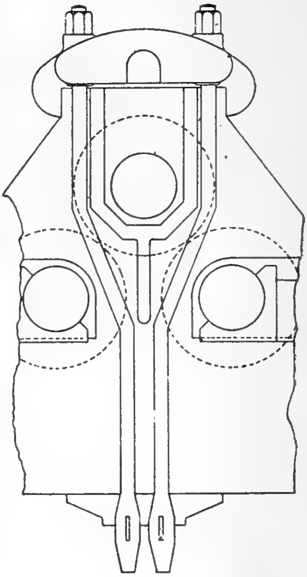

FIG. 99

Complete elimination of both king and side cap bolts is obtained by McNeil (patent 6228 of 1912), who forms the housings with projections, which engage with counterpart projections cast on the caps, as indicated in *Fig.* 101. The removal of the caps is effected by sliding.

The Trash Turner.—The object of the trash turner is to direct the material from the top and the front rollers to the top and the back rollers. In performing this function it acts in combination with the top roller, the lower portion of which, in combination with the trash turner, defines a passage through which the material is constrained to travel. A second duty of the trash turner is that it acts as a scraper for the front roller.

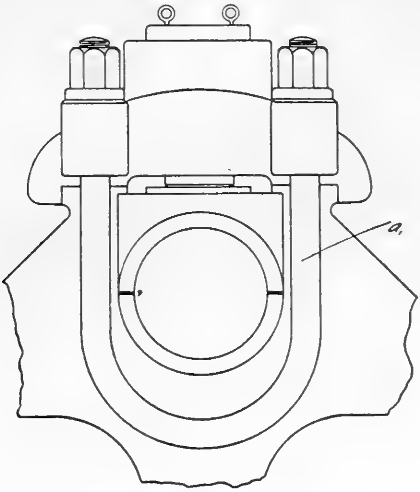

FIG. 100

Evidently the setting of the trash turner is controlled by the quantity of cane or rather the quantity of fibre which has to be passed in a unit of time. An increase in the quantity of fibre necessitates a deeper passage, unless an undue pressure is to be exerted by the bagasse. On the other hand, if the bagasse is not compressed to a certain limit, it will lack the cohesion and compactness necessary to make it "flow."

In its passage over the bar, power is absorbed in friction, and this absorption increases as the width of the trash turner increases, or as the apical angle of the mill becomes flatter. Various designs of mills intended to diminish the width or to eliminate the trash turner have already been referred to.

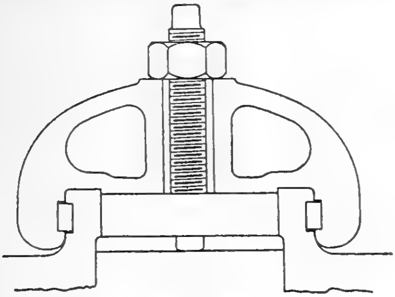

FIG. 101

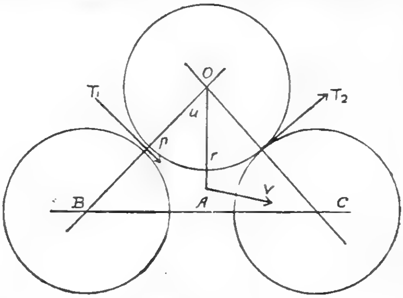

FIG. 102

The proper curve for the trash turner has been the subject of much discussion. The following analysis was given by Bergmanns[10] in 1889.

The duty of the trash turner in sugar mills is to direct the crushed cane from the first cylinder pair (one and two) to the second (two and three). The crushed cane must be so guided that cylinder 3 can take the feed without stopping the working of the plant.

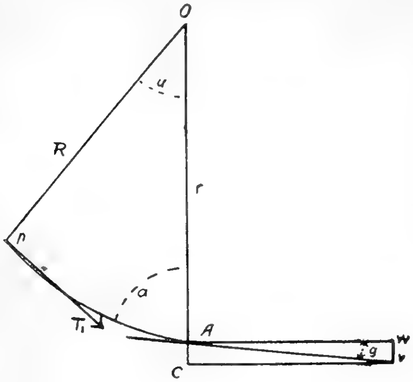

FIG. 103

Let T_1 represent the speed with which the crushed cane leaves the first cylinder pair and T_2 that of the bagasse leaving the second cylinder pair (see *Fig.* 102); then must always $T_1 = T_2$, and it hence follows that the passage of the bagasse over the trash turner must be uniform.

Consider the movement of a point *p* (*Fig.* 103); using a system of polar co-ordinates the point *p* will reach *A* in time *t* with a velocity *V*; this velocity can be divided into two components *c* and *w*, of which *c* is in the direction of the radius vector and *w* is perpendicular to it. The crushed cane must move over the trash turner in such a way that these components are constant, a result to be obtained by the following conditions:—

If *r* and *u* are the polar co-ordinates of the point *p*, then

$$C = \frac{dr}{dt} \quad \text{or} \quad dr = c\,dt.$$

Now, since C is constant, one obtains by integration

$$r = ct + C_1.$$

The value of C_1 is obtained by considering that when $t = 0$, r must be equal to R. Using these equalities it follows that

$$C_1 = R$$

$$r = ct + R \qquad \ldots \qquad \ldots \qquad \ldots \qquad (1)$$

Further

$$w = \frac{r \cdot du}{dt}$$

or

$$w \cdot dt = r \cdot du.$$

The value of r can be obtained by substitution from (1) whence it follows that

$$w \cdot dt = (ct + R)\,du$$

or

$$\frac{w \cdot dt}{ct + R} = du.$$

On integration

$$u = \frac{w}{c} \log (R + ct) + C_2.$$

The constant C_2 can be obtained by putting $t = 0$ and $u = 0$, whence

$$C_2 = \frac{w}{c} \log R.$$

Substituting this value of C_2 it follows that

$$u = \frac{w}{c} \log (R + ct) - \frac{w}{c} \log R$$

or

$$u = \frac{w}{c} \log \frac{R + ct}{R} \qquad \ldots \qquad \ldots \qquad (2)$$

Whence from (1) and (2) it follows that

$$u = \frac{w}{c} \log \frac{r}{R}$$

$$\text{or} \qquad \log \frac{r}{R} = \frac{c}{w}\, u$$

If, for simplicity, m be written for $\frac{c}{w}$, and if R be put equal to (1), this equation reduces to

$$\log r = m.u$$

$$\text{or} \qquad r = e^{mu} \qquad \ldots \qquad \ldots \qquad \ldots \qquad (3)$$

The equation (3) is none other than that of the logarithmic spiral where e is the base of the natural system.

This curve has the property that the radius vector always makes with the tangent a constant angle; thus the angle a is constant. Now (see *Fig.* 104),

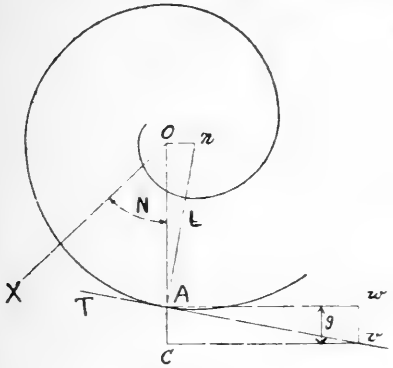

FIG. 104

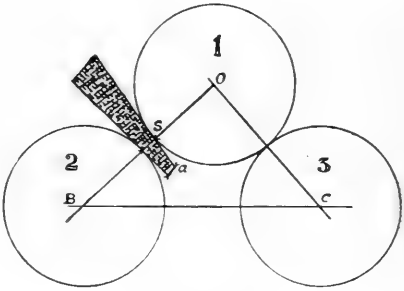

FIG. 105

$$m = \frac{c}{w} = \tan g$$

$$\text{and} \qquad g = 90^\circ - a$$

$$\text{then} \qquad m = \cot a = \text{constant.}$$

Draw ON perpendicular to OA, and AN perpendicular to T.

$$\text{Then} \qquad ON = r \cot a = rm.$$

In addition $NA = r \dfrac{1}{\sqrt{1 + m^2}} = \dfrac{r}{\sin a}$. Equation (3) gives the path which the point p describes as a logarithmic spiral; for sugar mills this curve is of definite length.

The path, then, which the point p and also the crushed cane describes is a part of a logarithmic spiral; in order to obtain this path for sugar mills the velocities w and c must be known. The velocity w, which is perpendicular to the radius vector, is always equal to T, the velocity with which the bagasse leaves the first cylinder pair. The velocity c is to be determined experimentally, and depends on the elasticity of the crushed cane, and that the cylinder 3 must easily carry forward the bagasse. Before determining empirically the values of c and of the angle a, we will look first at the following considerations :—

In *Fig.* 105, S is the opening between the cylinders 1 and 2, and d is the thickness of the crushed cane, and when the cane is not elastic d is equal to S: in this case the velocity c can be put equal to O, for there exists absolutely no reason why the crushed cane should proceed with a velocity c lying in the direction of the radius vector in order that it should easily and without excessive friction pass over the trash turner. When $c = o$, m also $= o$, and $a = 90$. It then follows

$$r = c = 1 = R \quad \text{or} \quad r = R = \text{constant.}$$

In this case the trash turner is a circle of radius $r = R = \frac{D}{2} + s$, where D is the diameter of the roller cylinder. In practice such a condition never occurs, due to the pressure between the top cylinder and the trash turner following on the elasticity of the crushed cane. This is why c must always be greater than 1. If c becomes too great, then the cylinder 3 cannot take the feed and will cause a stoppage. The velocity c must be such that the angle A is somewhat less than 90°.

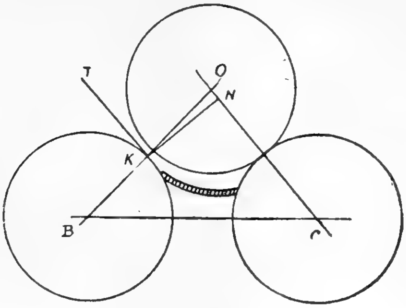

FIG. 106

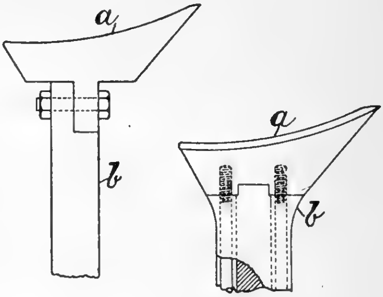

FIG. 107

The trash turner curve following this argument of Bergmans can be found graphically with close approximation as follows:—

Draw the positions of the rollers to scale, *Fig.* 106; join OB and OC; draw KT parallel to OC; draw KN perpendicular to KT, cutting OC at N; with N as centre and NK as radius draw an arc KM; then KM is very close to the original logarithmic spiral.

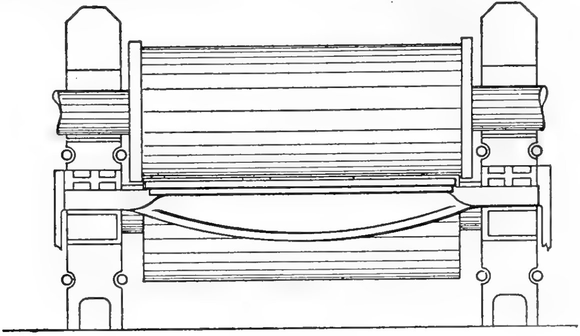

FIG. 108

The trash turner itself consists of two parts: the bar, which is a permanent feature of the plant, and the knife or plate, which is renewable. The knife, *a*, is attached securely to the bar, *b*, as indicated in two forms in *Fig.* 107.

The bar runs parallel to the rollers from housing to housing upon which it is supported. As the bar may be treated as a beam supported at both ends and uniformly loaded, its longitudinal section should be a parabola, as shown in Fig. 108. Vertical stiffening ribs are also generally included.

In the earlier designs the bar was supported on windows or apertures cast in the housings. The ends of the bar were made with a rectangular section, and the vertical and horizontal adjustment necessary was effected by inserting shims or packing strips. In order that the bar might be withdrawn laterally, the window was made deep enough to accommodate the bar at its maximum depth, distance pieces being inserted in, and secured by bolts to, the housing.

In most mills of recent construction the rocking trash bar is adopted. This form is indicated in *Figs.* 109 and 110. The lower surface, *a*, of the bar is shaped to receive a shaft or axle, *b*, to which it is secured by means of a U-clamp, *c*. The ends of the shaft are carried in counterpart recesses arranged in movable blocks carried on chairs or stools cast on or secured to the inside of the housing. The horizontal movement of the bar is substituted by an approximately horizontal movement obtained by the rotation of the bar about the shaft, *b*; motion is obtained by the threaded rod, *e*, passing through the lug, *f*, cast on the side cap of the mill. Vertical adjustment may be made by means of shims, or more effectively by the use of the sliding wedge blocks shown at *d* in *Fig.* 110. With the exception of the rocking combination all these devices are contained in Watson's patent (1606 of 1871), which has determined the type most commonly used.

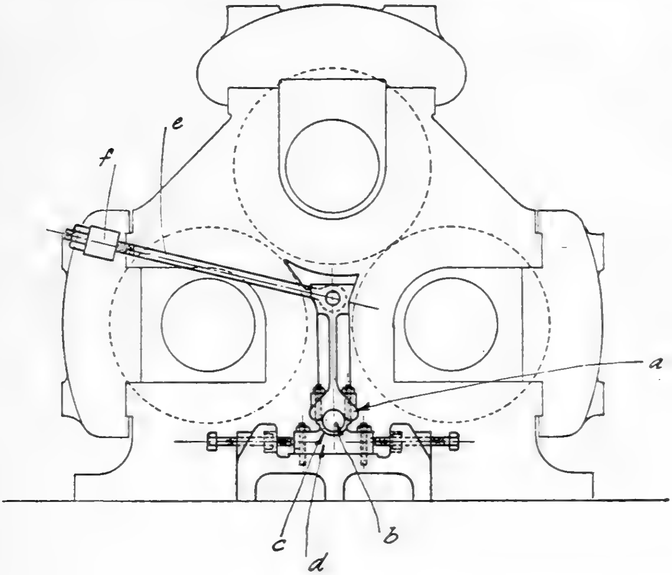

FIG. 109

Another method of adjustment very largely employed is included in Fisher's patent (U.S. 738629, 1899). As shown in *Fig.* 111, the rectangular ends of the bar are supported on rest blocks in windows in the housing. An upper rest block is formed with a journal, *a*, which receives the upper end of a lever, *b*, which also engages with projections, *c*, on the end of the bar. Horizontal screwed rods, *d*, attached to the end of the lever co-act with ears, *e*, cast on the housing, whence by means of nuts the lever is moved, and a horizontal movement of the bar ensues. The opening in the lever which engages with the projection on the bar is elongated to afford a vertical adjustment by means of shims or packing strips.

The Trash Turner and the Fibre Volume.—The writer attempted to obtain some analysis of the trash turner, based on the results obtained from the behaviour of cane fibre on compression. His treatment was as follows.[2]

Under pressures up to 60 lbs. per sq. in. he found that the volume of bagasse varied as the 2·5th root of the pressure. In the experiment of which the results are given on page 189, 0·221 lb. bagasse with 32·6 per cent. fibre was compressed on a base of 8·43 sq. ins. This quantity corresponds to 100,000 lbs. of cane with 12 per cent. fibre per hour, ground in a 78-in. mill at a surface speed of 25 ft. per min. The average value of $HP^{0\cdot4}$, where H is the height of the column of bagasse in inches, and P is the pressure in lbs. per sq. in., was 4·8, whence $H^{2\cdot5}P$ may be rounded off at 50.

Let the projected area of the trash plate be a square inches, and let the mean height of the column of bagasse be H inches: then solving $H^{2\cdot5}P = 50$ gives the average pressure per sq. in. on the projected area of the trash plate, whence the total pressure on the trash plate is aP lbs.

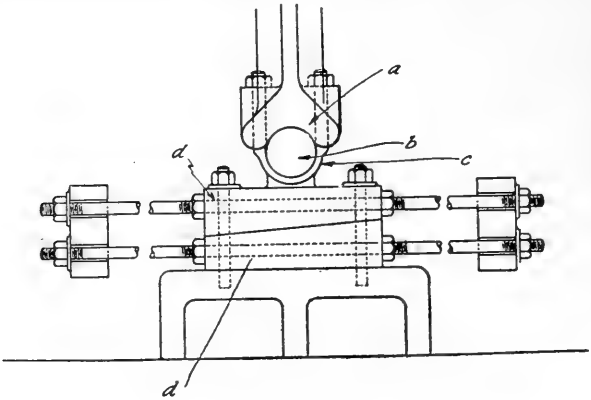

FIG. 110

With settings such as are found in practice, it is sufficient to take H as the vertical distance from the lowest point of the top roller to the trash plate. With a mill of this size at rest, H is seldom found less than 1 inch or 1·25 inches, allowing a lift of 0·25 inch when grinding at the normal rate. With $H = 1\cdot25$, P is found to be 28·6 lbs. per sq. in. The projected area of the trash plate with this drop in a 78-inch mill will be from 1,100 to 1,300 sq. ins., depending on the vertical angle, so that the total pressure on the bar will be 31,000 to 37,000 lbs.

Now let the trash turner be lowered until the drop at rest is 1·50 inches, corresponding to a drop, when working, of 1·75 inches. P now becomes 12·3 lbs. per sq. in. If the distance of the trash plate from the back roller be kept constant, lowering the trash plate will reduce the projected area, which will now be 1,000 to 1,200 sq. in., so that the total pressure is computed to be 12,300 to 14,800 lbs.

If the fibre in the cane increase, or if the quantity of cane milled increase, the pressure on the trash plate may be maintained constant by increasing the speed of the mills in proportion to the increase in the fibre passing in a unit of time. Conversely, with an increase in the speed, the fibre passing being constant, the pressure on the trash turner will decrease. If, however, the fibre increases and the speed remains constant, the pressure will increase in accordance with the relation $H^{2\cdot5}P = C$; for H, the quantity of fibre passing may be substituted, and, if the quantity of cane is constant, the percentage of fibre in the cane. For example, if with 12 per cent. fibre a pressure on the trash plate of 15 lbs. per sq. in. is computed, with 15 per cent. fibre the pressure will be $\left(\frac{15}{12}\right)^{2\cdot5} \times 15 = 26\cdot2$ lbs. per sq. in.

The power absorbed by the passage of the bagasse over the trash plate may also be computed. Let the pressure of the bagasse on the trash plate be 28·6 lbs. per sq. in., and let the area of the plate be 1,200 sq. ins. The total pressure on the plate is then 35,500 lbs. The coefficient of friction of bagasse on iron is about 0·4; then, if the speed of the bagasse be 25 ft. per min., the foot-pounds necessary to draw the bagasse over the plate are $35{,}500 \times 0\cdot4 \times 25 = 355{,}000$, and the horse-power necessary is 10·7.

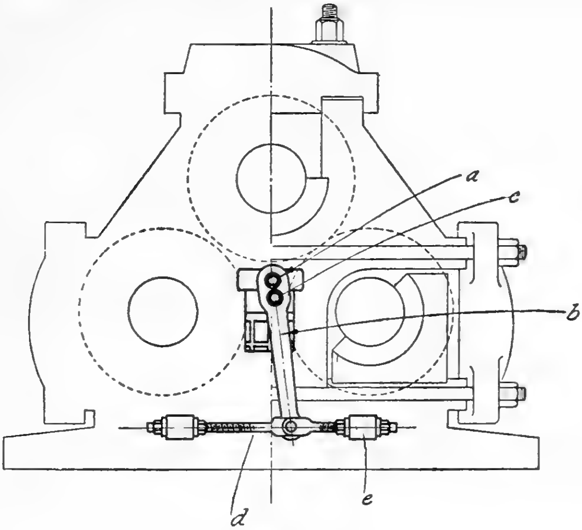

FIG. 111

These results obtained by the writer are open to criticism, and have been criticised by Bolk,[3] not unjustly, and it may be remarked :—

1. The numerical values obtained in the calculation will vary with every mill, and especially are controlled by the value taken for the vertical angle of the mill.

2. The use of one constant for the bagasse in all the mills after a varying number of pressings is too broad.

3. No account is taken of the slipping action of the top roll when moving over the layer of bagasse.

4. The occasional fracture of trash turners shows that pressures much greater than those computed do occur.

5. Any choking of the bagasse on the plate entirely invalidates any conclusions that can be drawn.

The conclusions drawn by the writer were intended to be only general, and to apply solely to a *layer of bagasse flowing uniformly over the trash plate without interruption.* In actual operation it is doubtful if such a condition ever obtains.

Pressure Regulators.—In a rigid mill in which the position of all the rollers is fixed by means of caps and tie-rods, any variation in the quantity of cane, or more strictly of fibre, passing in a unit of time, is accompanied by a variation in the pressure to which the material is subjected. If the quantity of fibre is less than corresponds to the minimum opening or clearance, the pressure tends to vanish; and if the quantity increase indefinitely, the mill will either choke, or a fracture of some part will occur, provided that the engine develops sufficient power. In rigid mills it is then necessary to keep the quantity of fibre passing as constant as is possible, and to control the setting and speed in relation to the quantity of cane desired to be milled. When the volume occupied by a unit weight of bagasse with a pre-arranged water content is known, the opening and the speed of rotation can be arranged to suit. Only a first approximation can be made, however, since, in proportion to the actual opening, the volume occupied by the grooving and the inequalities of the shells forms a very considerable percentage.

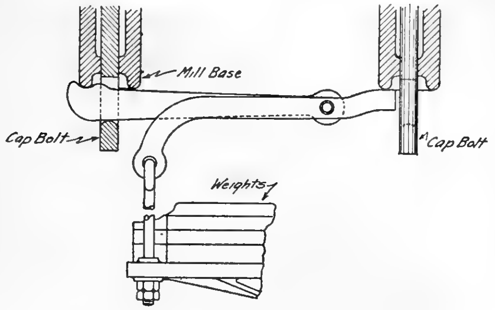

FIG. 112

In order that the disadvantages referred to above may be overcome, rigid mills have become largely a thing of the past. At present one roller of the mill is arranged to lift under a predetermined pressure. When, as is general, the top roller which coacts with both the lower rollers is selected as the moving element, the sum total of the pressures exerted vertically on the top roller is a constant, whatever is the quantity of cane passing, provided sufficient is passed to cause the top roller to lift. As explained elsewhere, however, the distribution of the load as between top and front rollers, and the top and back ones, will vary with every variation in the feed of cane.

FIG. 113

The necessity of this pressure regulation, which also acts as a safety device, was recognised at an early date. The first edition, 1855, of Richardson's "Chemistry as applied to the Arts and Sciences" figures a mill invented by a Demerara engineer, Moore, and built by Pontifex & Woods, in which the front and back rollers were free to slide outwards, being maintained in position by a system of weights and levers. This device appears in a number of early American patents and at a later date in Brullard's U.S. patent (422289 of 1890), shown in *Fig.* 112. The writer knows of a mill operating over a whole crop with a makeshift arrangement similar to this, on the occasion of a locally irreparable accident to the hydraulic system.

Hydraulic pressure, the system adopted in nearly all plants of recent date, was first suggested by Jeremiah Howard (U.S. patent 21340 of 1858). His design, of very considerable interest, is shown in *Fig.* 113. It is to be observed that the pressure was obtained by a pump, *a*, driven off a mill roll, and that a safety valve, *b*, released the pressure at a predetermined point, no accumulator being employed.

The introduction of the hydraulic really dates from Stewart's patent (3269 of 1871) and from McDonald's patent (U.S. 128235 of 1872). As designed in both these inventions, the pressure is obtained from an "accumulator," shown in section in *Fig.* 114.

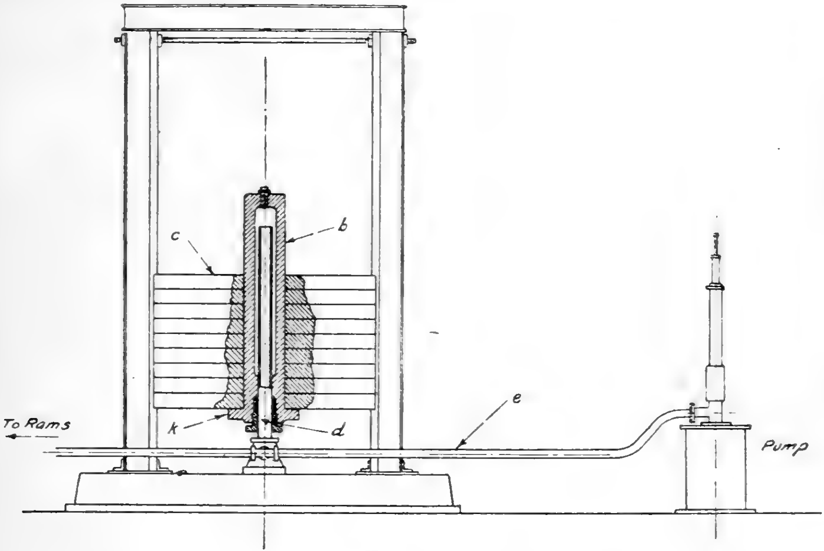

FIG. 114

This device consists of an upright hollow rod, *d*, which communicates with a force pump. This rod also communicates with the cylinder, *b*, which supports a number of removable weights, *c*, on the flange, *k*. When oil or other fluid is pumped into the cylinder from the pump, *a*, through the pipe, *e*, it will eventually raise the weights from the flange, and the pressure in the system will be that due to the weights. If the pipe *e* is continued so as to communicate the pressure to rams bearing on the brasses of the rollers, the pressure exerted on the roller is $\frac{\text{area rams}}{\text{area cylinder}} \times$ weights supported. When the bagasse in its passage exerts a pressure equal to this, the roller will lift, and, when once the roller has lifted, the pressure exerted by the bagasse and on the bagasse is constant.

The location of the rams varies. Stewart placed them preferably acting directly on the back roller, while McDonald arranged them underneath the mill and operating on the top cap through the king bolts, as shown in

Fig. 115. This arrangement was followed by American firms until recently. At the present time the hydraulic is almost always placed in the top cap, and is designed with regard to accessibility. Such an arrangement is shown in *Fig.* 116: *A* is the top cap of a mill, in which is formed the aperture *B*; the top of this aperture is closed by an easily removable "plug cover"; the form shown employs an interrupted screw thread, and is known as the breech block type. By means of a quarter turn the cover may be lifted from the cap. *C* is the fluid chamber, filled by a pipe in communication with the accummulator. *D* is the ram bearing on the upper brass, *E*, of the top roller. *F* shows the U-cup leathers forming the hydraulic joint. Various other devices are employed to make a tight joint in the plug cover. Accessibility may also be obtained by inserting a distance piece longer than the ram between it and the top brass, so that if the distance piece be slid out the ram falls, and may also be removed by sliding.

In modern practice the pressures exerted reach up to 500 tons in a seven-foot mill, and correspondingly less in smaller plants.

An irregularity in the use of hydraulics is the unequal pressure on either side of the mill caused by the thrust of the pinions when these are installed on one side only. This may be compensated for by making the rams of unequal size, or by employing independent accumulators for either side, less pressure being applied at the pinion end than at the other end.

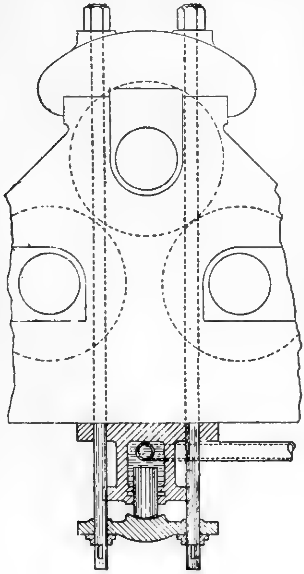

FIG. 115

Another pressure-regulating device which has been and is very extensively employed is the "Toggle gear" of Hudson (13102 of 1887), shown in *Fig.* 117. The toggles act between the top roll cap and a yoke connecting the upper ends of the king bolts. The toggles are connected by horizontal bars, upon which the superior or inferior ends of the toggles play.

This bar also carries the convolute spring, constrained and controlled by the nuts. When at rest the toggles assume a vertical position, becoming forced outwards against the pressure of the spring when the top roll lifts. The actual pressure exerted is controlled by the compression of the springs, and increases with the lift of the roller. This device eliminates trouble with the hydraulic leathers.

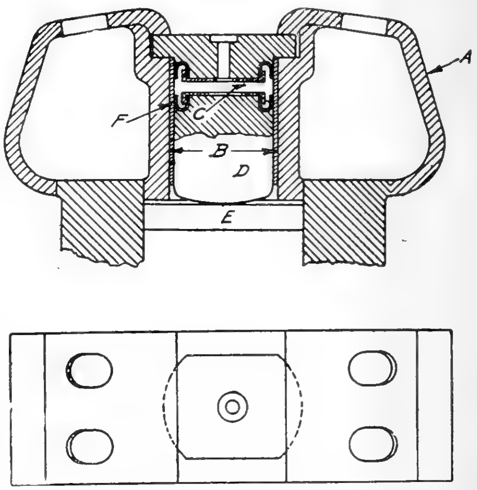

FIG. 116

Bagasse Conveyors.—The bagasse is usually conveyed from mill to mill by steel slat endless belts operated by a chain and sprocket drive off a lower roller of the mill. An alternative method employs a scraper conveyor operating in combination with a water-tight trough.

Strainers.—The fine particles of fibre which are carried down with the juice are separated therefrom by brass or copper strainers, the holes in which are usually about 1-32nd inch in diameter. The strainer, *Fig.* 118, is usually arranged as a narrow deep trough, *a*, parallel with the mill, and is partitioned so as to collect the juices from the various mills separately. Over the surface of the strainers run wooden or rubber-faced scrapers, *b*, which finally elevate the "cush cush" and discharge it to a screw conveyor, *c*, running parallel with the rollers, and behind the first mill. This method is indicated in *Fig.* 118.

A different type of strainer, operated by the fall of the juice, is shown in *Fig.* 119.

Roller Scrapers.—The bagasse adheres tenaciously to the rollers, especially those of the later mills. They are kept clean by scrapers, *a*, arranged as indicated in *Fig.* 120; this method is included in Flower's patent (U.S. 389801, 1888).

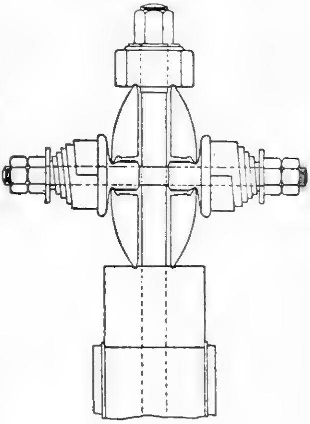

FIG. 117

The Gearing of Mills.—The motion from the crankshaft of the cane engine is transmitted to the top roller of a mill, or of a series of mills, by spur and pinion gearing. The limits of the speed of the engines are 35 to 55 r.p.m., 45 r.p.m. being very general practice. The train of gearing reduces the number of revolutions in the ratio of from 20 to 25: 1 so as to cause the mill rollers to make about 2 revolutions per minute. The train of gearing is now always compound, and such was first used at the beginning of the 19th century. There are still in operation, however, some single trains with the spur wheel as much as 30ft. in diameter.

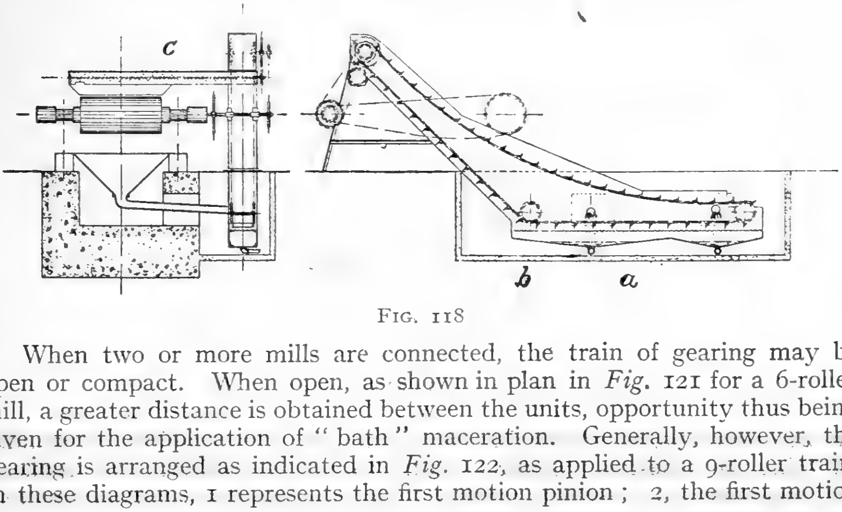

FIG. 118

When two or more mills are connected, the train of gearing may be open or compact. When open, as shown in plan in *Fig.* 121 for a 6-roller mill, a greater distance is obtained between the units, opportunity thus being given for the application of "bath" maceration. Generally, however, the gearing is arranged as indicated in *Fig.* 122, as applied to a 9-roller train. In these diagrams, 1 represents the first motion pinion; 2, the first motion spur wheels ; 3, the second motion pinions ; and 4, the second motion spur wheels. A common modification of this train is to make of double width that second motion pinion coacting with two spur wheels, so that the double load may be distributed. When four or more mills are laid out in one train, two engines are generally used, practice being divided between driving the mills three and one, or two and two.

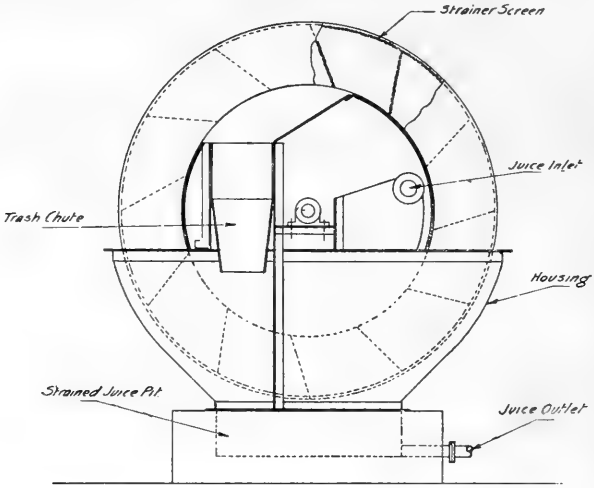

FIG. 119

In the earlier 9-roller trains the second motion spur wheels were carried on high pedestals, as indicated in elevation in *Fig.* 123, stability being aided by tying the pedestals together. As fracture of the pedestal was frequent, it is customary at present to arrange the centres of spur wheels and pinions

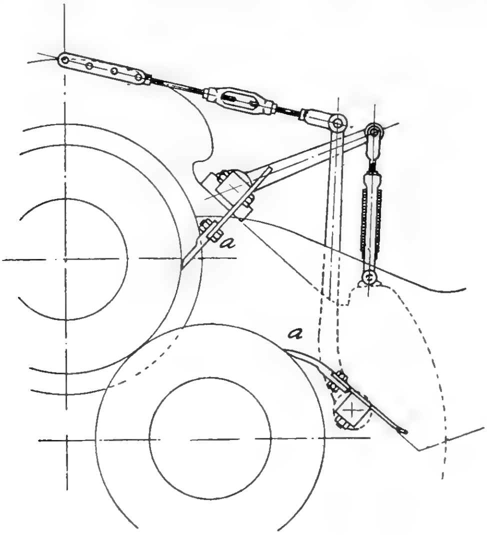

FIG. 120

in the same horizontal line, as in *Fig.* 124. Connection from the end of the main spur wheel shaft to the shafts of the top rollers is made by a distance piece and coupling boxes, as shown in *Fig.* 125. To allow play for the top roller, the coupling boxes only very loosely envelop the shafts and distance pieces. The top roller shaft carries a pinion, engaging with pinions on the shafts of the lower rollers. It is not generally customary at present to carry pinions on the end of the mill shafts remote from the engine. As a modification the mill roll gearing may be carried on the reduction gear bedplate, connection to each roller being made by separate distance pieces and coupling boxes.

The train of gearing described above is almost universal. Various patents include internal-geared spur wheels; Robinson, 851 of 1853, 2065 of 1809; Caird and Robertson, 3066 of 1867: bevel gear, Wilson, 2754 of 1861: worm and wheel drive, Halpin and Alliott, 2039 of 1873; Webb, 3747 of 1869: pitch chains, Rousselot, 5050 of 1876: helical teeth, Watson, 1324 of 1877.

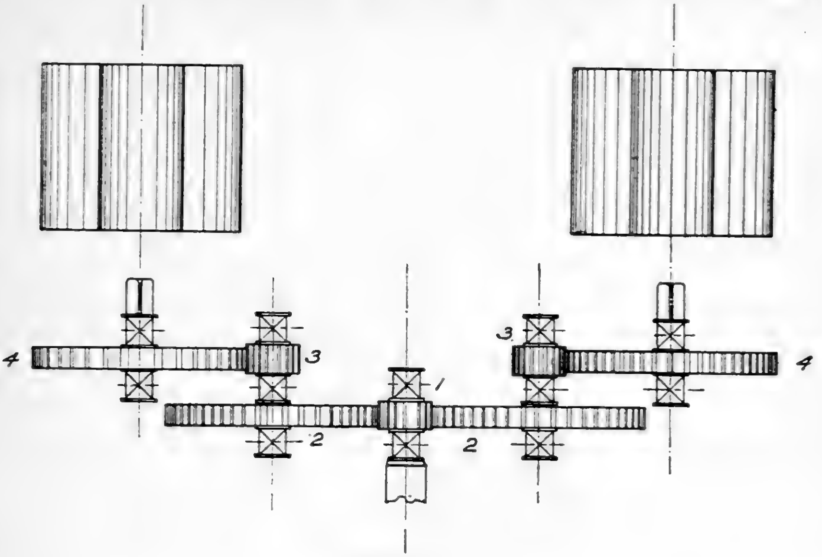

FIG. 121

The Motive Power of Milling Plants.—Putting on one side the exceptional cases where water power is available, and neglecting those districts where cattle power is still used, steam power may be regarded as the only prime mover to be considered. The earlier British patents all show a vertical engine as the type employed. The beam engine is shown for the first time in Robinson's patent (2065 of 1859), and this type was installed by Scotch firms as standard till about 1890, after which date horizontal engines are found. American practice introduced the Corliss engine, and the use of this type remains standard practice with U.S. firms. British firms, though building this type, seem to incline rather to the piston valve engine.

The introduction of the steam turbine as a prime mover dates from 1913, when the "Amistad" factory in Cuba was "electrified." Since then no inconsiderable proportion of new installations have adopted this method.

In these installations the prime mover has been a non-condensing steam turbine, making about 1,800 r.p.m., direct coupled to a dynamo the current from which drives a motor making 450 r.p.m. The motor in turn drives through herring-bone spur and pinion gearing, with a gear ratio of 1 : 10, what corresponds to the first motion pinion of the ordinary steam-driven train.

It is easy to see that the combination of dynamo and motor forms nothing else than a reducing gear, to which has to be added the first motion spur and pinion gear before the system is reduced to the first motion pinion of the steam drive.

Considered in this light the arrangement appears to be a rather expensive train of gearing. As regards the steam consumption, the latest tests give a distinctly higher rate to the non-condensing turbine than to the non-condensing Corliss engine in units of the size installed. The determinations approximate to 33 and 30 lbs. of steam per indicated horse-power-hour. To the difference between these figures is to be added the power lost in the electric reduction gear. This is taken as 8 per cent. in both dynamo and motor, and 2 per cent. in the wiring, so that only 83 per cent. of the power represented by the steam turbine reaches the second motion pinion of the train of gearing corresponding to the first motion pinion of the steam drive. Allowing for the increased consumption in the turbine, it would then follow that about 30 per cent. more steam must be delivered to the turbine than to the Corliss engine. Another factor tends to increase the steam consumption. The prime motor driving a milling plant must be capable for a limited period of developing power much above the normal load. The regulation of the electric machinery is by means of an external resistance,

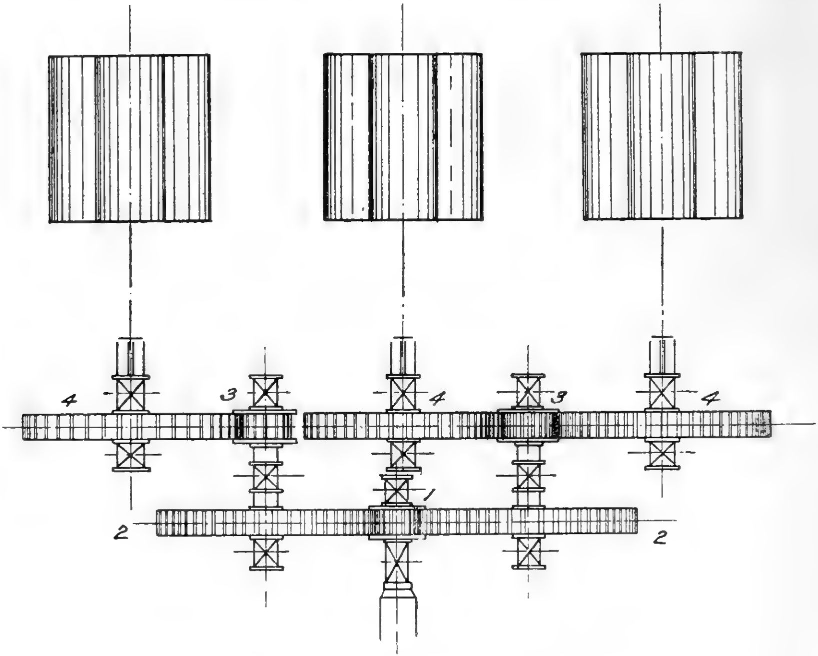

Fig. 122

and hence, except when running at the maximum capacity, some power is lost here. As opposed to this source of loss, the steam consumption per horse-power is in a Corliss engine sensibly constant over a wide variation in the power developed. However, if the house is able to take up all the exhaust steam produced, there need be no heat loss here except that represented by "cylinder condensation," a source of loss which is probably a little less (as a percentage of the steam used) in the turbine than in the reciprocating engine.

There are, however, a number of advantages connected with electric drive, which may be briefly summarized :—

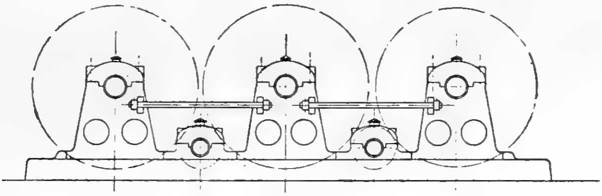

FIG. 123

1. Absence of all oil in the exhaust.
2. Compactness of plant and decreased cost of foundations.
3. More extended control by means of recording watt-meters, this being possible only with electric drive.

In certain plants individual motor drive has been installed for each unit of a train of mills. The executive can detect at once any variation from the proper amount of power taken by any unit of a train, and by means of the recording instruments can reconstruct the operation of the plant over any period. It is this opportunity for a complete control that appeals to the writer as the great advantage of the electric reduction gear.

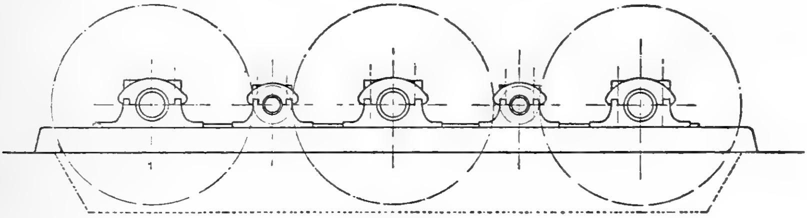

FIG. 124

Milling Trains.—Originally, and up to comparatively recent years, only one mill was employed, and the introduction of a second unit (double crushing) without the intermediate addition of water did not in any way alter the principle of the process, which remained one of dry crushing.

In a sense, Robinson's multiple roller mills (see below) form a train, and the first instance of a single engine double-crushing plant is probably that erected by Don Wenceslao Urrutia in Cuba in 1843,[11] and condemned because it spoilt both juice and bagasse. At about the same time a three-roller mill, followed by a two-roller with the addition of water, was in use in Province Wellesley, and is illustrated by Wray in the "Practical Sugar Planter" (1848).

The first patent on a train of mills or " tandem," the term used in Cuba, appears to be found in Rousselot's patent (5050 of 1876). His design consisted of a three-roller followed by two two-rollers, the first mill being driven off the engine and the two last by pitch chains. In his patent 2280 of 1878 the pitch chain drive is changed to spur and pinion gearing, one engine only being used; this combination was also patented by Dale (92 of 1885).

The modern multiple milling train driven by one engine dates from 1892, when a 9-roller single engine mill was erected by the Fulton Iron Works at the Cora plantation of the New Iberville Planting Co., in Louisiana. In districts where American influence was dominant, this rapidly became the standard type with new construction. In various places, especially where capital was scarce, 9-roller trains compounded of already existing units, each unit being separately driven, were erected. These plants may be defined as 9-roller trains in operation, but not in design.

Perhaps the first 12-roller train was that installed at the Oahu Sugar Co.'s mill in Hawaii in 1906, and formed by the addition of a unit to an existing 9-roller train. The success of this change was so very marked that other installations followed. In 1910 the Ewa Mill in the same locality converted two 9-roller trains into a 15-roller train, and eventually into an 18-roller one.

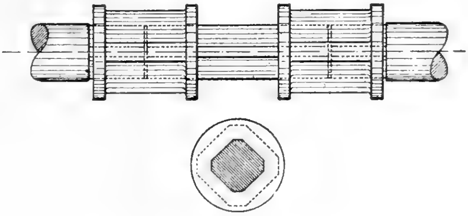

FIG. 125

In recent practice the crusher and 9-roller mill are regarded as inefficient. The tendency in Hawaii has been towards the crusher, swing hammer shredder, with or without the use of knives, and 12-roller mill. In Cuba the later mills have adopted the double crusher, followed by fifteen or by eighteen rollers. The writer is inclined to attach importance to the disintegration of the cane obtained with the swing hammer shredder, and believes that the Hawaiian scheme is better as regards power required and extraction obtained, while it is not inferior as regards capacity.

The Capacity of Mills.—By the capacity of a mill is indicated the quantity of material which can be treated in a given time. This is usually stated as so many tons of cane per hour, but the capacity should rather be expressed in tons of fibre per hour. The capacity of a mill or milling plant will also be affected by the efficiency which is demanded of it, and, given a certain quantity of power available in the engine, it is possible from the experimental results given earlier in this chapter to correlate tonnage ground with the percentage of fibre contained in the bagasse after milling.

Again, the capacity of the plant will depend on the view point of the operator. In some districts a milling plant is regarded solely as a means of grinding cane, in others as a means of extracting sugar from the cane. If conditions exist such that the cultivation has outgrown the factory, relatively large capacities result due to the necessity of taking off the crop. Conditions such as these obtain in Cuba, and are naturally combined with a lower efficiency at the mills. The reverse condition, namely, a cultivation which has reached the limit of its extension, obtains in Hawaii, and here are found lower capacities combined with the maximum of efficiency.

In one and the same milling plant the means available to increase capacity is principally an increase in the speed of the mill, whereby the grinding surface developed in a unit of time is increased. This, of course, implies higher engine speed, and the development of more power, which is the ultimate factor controlling mill capacity. Other factors of influence are the roughness of the rollers as affecting slippage, the setting of the trash turner, the care taken in feeding the cane to the mill, and the means adopted in preparing it for milling. Minor factors are details such as the angle of the crusher, of the carriers, and of the feeding shoots.

As regards the actual recorded capacities of milling trains, as distinct from a mill, a study of a very large number of results on record of nine, twelve, fifteen and eighteen-roller plants, preceded by efficient crushers, has led the writer to the formula :—Capacity $= 0{\cdot}005\ n\ l^2\ d^2$ tons fibre per hour, where n is the number of mills in the train, l is the length, and d the diameter of a roller expressed in feet. Values of this expression, which has no rational basis, and is entirely empirical, are given below.

If besides capacity the economics of high efficiency are considered, it will be reasonable to obtain this end with longer trains, rather than with larger units, because of the opportunity afforded for compound maceration.

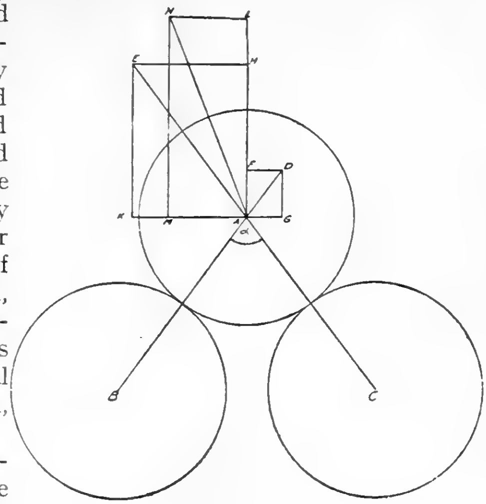

FIG. 126

VALUE OF $0{\cdot}005\ n\ l^2\ d^2$ OR CAPACITY IN TONS FIBRE PER HOUR.

l ft.	d ft.	$n =$ 3	4	5	6
5·0	2·5	2·33	3·11	3·87	4·65
5·0	2·67	2·65	3·56	4·45	5·34
5·5	2·67	3·21	4·28	5·35	6·42
6·0	2·67	3·84	5·12	6·40	7·68
6·0	2·83	4·32	5·76	7·20	8·04
6·5	2·83	5·07	6·76	8·45	10·14
7·0	2·83	5·88	7·88	9·80	11·76
7·0	3·0	6·61	8·82	11·02	13·23

The Stresses on the Three-Roller Mill.—In *Fig.* 126 let the three circles represent the three rollers of a standard three-roller mill, of which the vertical angle is α. Let the cane pass from left to right. Let the pressure exerted on the layer of bagasse in its passage between the top and front roller be p, and let that between the top and back roller be $n\ p$. Let these pressures act through the lines joining the centres of the rollers. Along $B\ A$ produced lay off $A\ D = p$. Resolve $A\ D$ into vertical and horizontal components, namely $A\ F$ and $A\ G$. Along $C\ A$ produced lay off $A\ E = n\ p$, and resolve $A\ E$ into vertical and horizontal components, namely $A\ H$ and $A\ K$.

Along $A\ H$ lay off $H\ L = A\ F$, and along $K\ A$ lay off $K\ M = A\ G$. Complete the parallelogram $A\ M\ N\ L$. Then AN is the resultant of the forces p and $n\ p$, in magnitude and direction; $A\ L$ is the vertical component of forces p and $n\ p$, and $A\ M$ is the horizontal component.

$$\text{Now } AF = p\cos\frac{\alpha}{2} = p\sqrt{\frac{1+\cos\alpha}{2}} \text{ and } AH = np\cos\frac{\alpha}{2} = np\sqrt{\frac{1+\cos\alpha}{2}}$$

$$\text{whence } A\,L = A\,H + H\,L = A\,H + A\,F = (p + np)\sqrt{\frac{1+\cos\alpha}{2}}$$

If the hydraulic pressure act on the top roll and is V,

$$V = (p + np)\sqrt{\frac{1+\cos\alpha}{2}} \text{ or } p + np = \frac{\sqrt{2}\,V}{\sqrt{1+\cos\alpha}}$$

and
$$p = \frac{\sqrt{2}\,V}{(n+1)\sqrt{1+\cos\alpha}}$$

whence, whatever the ratio of p to np, or whatever the settings adopted, the sum total pressure exerted perpendicularly on the bagasse is constant when V and α are constant.

As α decreases, i.e., when the vertical angle becomes steeper, cos α increases; hence, with decrease of the vertical angle the hydraulic load or value of V must be increased to keep the value $p + np$ the same.

The problem which presents itself in this connection is:—What is the best value of n? For example, let $\frac{\sqrt{2}\,V}{\sqrt{1+\cos\alpha}} = 500$ tons. Then p may be 50 tons, when np will be 450 tons and $n = 9$. With a different setting p may be 100 tons when $np = 400$ tons and $n = 4$. So far as the writer is aware, there is no very definite information on this point; in other words, the problem resolves itself into the question whether the front roller is to be regarded as a feeding roller and the back roller as a crushing roller, or whether the front roller is to be regarded as a crushing roller also. In the latter case the values of p and np tend to approach each other, but the maximum single pressure obtained decreases. This problem may also be expressed as the question:—Will better results be obtained by two crushings at a lower intensity, or by one very light one and a second very heavy one? The experiments of the writer quoted earlier point to the obtaining of better results when p and np are equalized as far as possible.

$$\text{Again } A\,K = np\sin\frac{\alpha}{2} = np\sqrt{\frac{-\cos\alpha}{2}} \text{ and } AG = p\sin\frac{\alpha}{2} = p\sqrt{\frac{1-\cos\alpha}{2}}$$

whence
$$A\,M = A\,K - A\,G = p\,(n-1)\sqrt{\frac{1-\cos\alpha}{2}} = H$$

and hence
$$\frac{\sqrt{2}\,H}{\sqrt{1-\cos\alpha}} = p\,(n-1) \text{ and } p = \frac{\sqrt{2}\,H}{(n-1)\sqrt{1-\cos\alpha}}$$

But H is the horizontal component of the forces p and np pressing the top roller against the brasses on the feed side of the mill, often referred to as the side thrust. When $n = 1$ or $p = np$ there is no side thrust, and the side thrust increases as n increases and as α increases; that is to say, as the vertical angle becomes flatter.

A steep vertical angle, then, while calling for a narrow trash turner, and decreasing the intensity of the side thrust, calls for an increased intensity of the hydraulic pressure to maintain the same pressure on the bagasse as is obtained with a flatter vertical angle.

The magnitude of the resultant AN or R and of the horizontal component H can be obtained in terms of V, the hydraulic pressure, thus :—

$$(AN)^2 = (AM)^2 + (AL)^2 = \left(p\,(n-1)\sqrt{\frac{1-\cos\alpha}{2}}\right)^2 + \left(p\,(n+1)\sqrt{\frac{1+\cos\alpha}{2}}\right)^2$$

$$= p^2\ (p^2 + 1 + 2\ n\ \cos\ \alpha)$$

But $$AN = R \text{ and } p = \frac{\sqrt{2V}}{(n+1)\sqrt{1+\cos\alpha}}$$

whence $$R = \frac{\sqrt{2}\ V\sqrt{n^2+1+2\,n\cos\alpha}}{(n+1)\sqrt{1+\cos\alpha}}$$

Also $(A\ M)^2 = (A\ N)^2 - (A\ L)^2$, where $A\ M = H$, $A\ N = R$, and $A\ L = V$; whence

$$H^2 = \frac{2\ V^2\ (n^2+1+2\,n\cos\alpha)}{(n+1^2\ (1+\cos\alpha)} - V^2$$

$$= \frac{n^2-2n+1-\cos\alpha\ (n^2-2n+1)}{(n+1)^2\ (1+\cos\alpha)}\ V^2$$

$$= \frac{(n-1)^2-\cos\alpha\ (n-1)^2}{(n-1)^2\ (1+\cos\alpha)}\ V^2$$

or $$H = \frac{(n-1)\sqrt{1-\cos\alpha}}{(n+1)\sqrt{1+\cos\alpha}}\ V$$

Finally, the resultant R makes an angle, β, with the horizontal such that

$$\tan\beta = \frac{V}{H} = \frac{n+1\sqrt{1+\cos\alpha}}{n-1\sqrt{1-\cos\alpha}}$$

The Actual Pressure on the Rollers.—In a mill controlled by hydraulic pressure, the actual pressure exerted on the rollers by the bagasse in its passage is, of course, controlled by the hydraulic load and by the vertical angle. A graphic representation of this pressure can be obtained as follows:—

In *Fig.* 127 let *a c e* represent a mill roller to which a tangent is drawn at *c*. From *a* draw *ab* perpendicular to this tangent : then denoting *bc* by *l*, *ab* by *d* and *oa* by *r*, $d = r - \sqrt{r^2 - l^2}$.

If the lower circle represent a second mill roller separated by a distance k (k is the "opening"), then $H = k + 2\ (r - \sqrt{r^2 - l^2},)$ where H is the distance between the rollers at any length l, measured from a point on either circle obtained by joining the centres of the circles ; that is to say, along the tangent from the point of nearest approach.

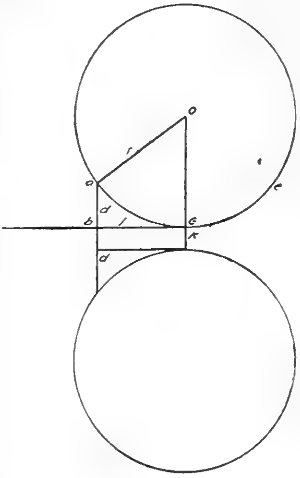

FIG. 127

On page 189 is given a table showing the volume (or height of a column) of bagasse under known pressures. The quantity of bagasse used in this experiment corresponds to 100,000 lbs. of cane, with 12 per cent. fibre, milled in a 78-inch mill at a surface speed of 25 ft. per minute. For pressures of 1,000 lbs. per sq. in. and upwards it was found roughly that $HP^5 = 9 \cdot 5$.

Immediately above, H has been given in terms of the roller radius, the opening, and the distance from line of nearest approach of the rollers.

The pressure exerted on the rollers can then be calculated for any distance from the line of nearest approach, and the results expressed as a curve. As an experimental datum, the writer observed that under conditions such that $H^5 P = 9 \cdot 5$, the top roller lifted 0·25 inch if the top and back rolls were set metal to metal.

The curve in *Fig.* 128 is the graph of $H^5 P = 9 \cdot 5$, as calculated for 30-inch and 44-inch diameter rollers, the opening, k, being taken as 0·25 inch. This curve is only an approximate representation of what happens, for the constancy of $H^5 P$ only begins to be apparent when P approaches a value of 1,000 lbs. per sq. in. In *Fig.* 129 is given the graph as obtained from the actually observed values quoted on page 189.

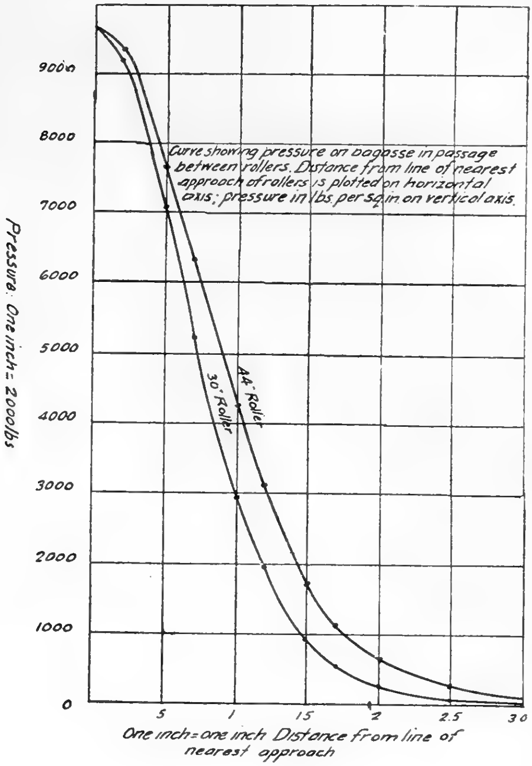

FIG. 128

The conditions between the top and the front rollers are less easy to represent. Supposing that at rest the front opening was 0·5 inch, the working opening with a lift in the top roll of 0·25 will be nearly 0·75 inch. The pressure corresponding to a height of 0·71 inch was found (see table on page 189) to be 162 lbs. per sq. in., whence it follows that the pressure between the top and front rollers is many times less than that between the top and back rollers. How much less is very hard to say, but in such mill settings as the writer has seen he believes that it is thirty to fifty times less.

The section immediately above discussed the resolution of the forces acting in a three-roller mill, in which p was the pressure between the front and top rollers, and np was the pressure between top and back rollers. If the writer's experimentally derived conclusions are correct, the resultant of the forces p and np is only very little deflected from the line joining the centres of the top and back rollers, as can easily be calculated or obtained graphically, by giving to n the value of 30. In addition, the value of the side thrust becomes very great; thus with $n = 30$ and a vertical angle of 80°

the side thrust becomes $\frac{29\sqrt{1-\cos 80}}{31\sqrt{1+\cos 80}}V = 0{\cdot}784\ V$, where V is the hydraulic load.

The discussion in this and the preceding section leaves out of consideration :—

1. The reaction between the bagasse and the top roller.
2. The volume occupied by cavities in the mill rollers, as affecting the value taken for the working openings.

It assumes :—

1. That the pressure of the expanding bagasse on the delivery side of a roller is nugatory.

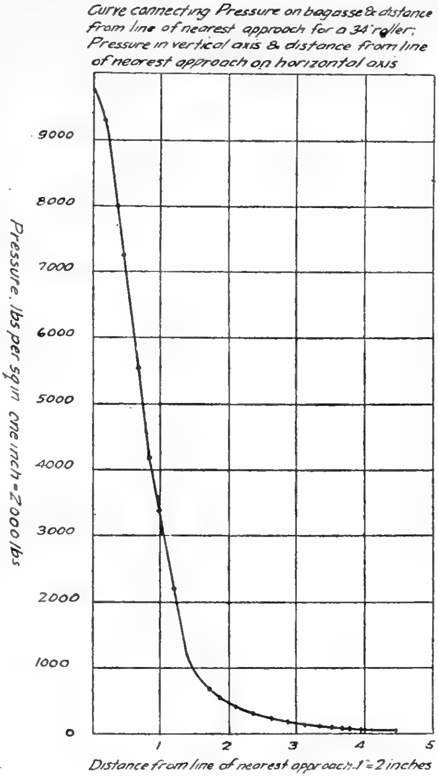

FIG. 129

2. That the pressure exerted by the bagasse acts along the line joining the centres of the rollers, a condition which will not obtain if the assumption in (1) is correct.
3. That fluid expressed from the bagasse is able to escape freely.

On account of these and other reasons, the writer's conclusions have been quite reasonably criticised by Bolk[3] in Java, particularly in regard to the value deduced for n in the discussion above.

The Setting of Mills.—In order that the residue of fibre and juice may pass out from the mill, a certain opening must be left between the top and back roller. The product of this opening into the area length of roller × surface speed of roller gives a volume which for lack of a better expression may be called the *escribed volume*. Evidently the volume escribed in unit time is correlated with the quantity of material emergent from the top roller and the back roller. This material consists of a solid residue, *fibre*, and a fluid residue, *dilute juice*. The solid material is unalterable as regards its absolute volume ; and hence the volume of the fluid residue must be that of the escribed volume *less* that of the fibre. This reasoning gives a preliminary basis upon which the necessary opening in rigid mills may be determined. For example, let there be a rigid mill, 30-in. × 60-in., making two revolutions per minute, and let it be desired to mill 30 tons of cane containing 10 per cent. of fibre per hour. The emergent bagasse is to contain 45 per cent. of fibre and 56 per cent. of juice, the densities of those materials being taken as 1·35 and 1·0 respectively. The volume of fibre passing per hour is :—

$$\frac{3 \times 2000}{62{\cdot}25 \times 1{\cdot}35} = 71{\cdot}39 \text{ c. ft.},$$

and that of the juice is

$$\frac{3{\cdot}66 \times 2000}{62{\cdot}25 \times 1{\cdot}07} = 110{\cdot}88.$$

In all, the total volume of residue passed out is 182·27 c. ft. per hour, or 3·038 c. ft. per minute, and this must be equal to the escribed volume.

At two revolutions per minute the area developed in one minute by a line on the roller equal to its length and parallel to its axes is $\pi \times 2 \times 2{\cdot}5 \times 5 = 78{\cdot}56$ sq. ft. Then if x be the opening necessary

$$78{\cdot}56\,x = 3{\cdot}038, \text{ whence } x = 0{\cdot}0387 \text{ ft.} = \tfrac{15}{32} \text{ inch.}$$

This calculation assumes that the rollers are smooth; actually not only are they grooved, but also the cavities in the metal occupy an appreciable volume. Hence a setting closer than this will be adopted. It also follows that the setting will not increase in direct proportion to the quantity of material to be passed, but will partake of the relation $a : b = K + d_1 : K + d_2$ where a and b are the quantities of material passed, d_1 and d_2 are the openings, and K is the constant volume of the groovings and cavities$_2$

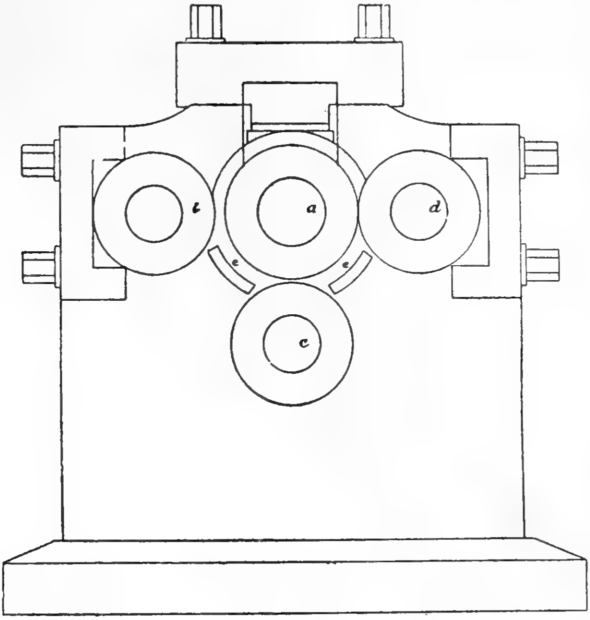

FIG. 130

In rigid mills, after the setting has once been made, in order to obtain uniform results, the quantity of fibre passing in unit time should be unvariable. If the quantity of fibre offered to the mill increases, the rollers must be operated at a higher surface speed, in order that the necessary escribed volume be developed. If the bagasse is to remain of unchanged composition, the increase in speed must be directly proportional to the increase in fibre. This statement resolves itself into increased engine speed and increased consumption of power in direct proportion to the fibre operated on. If, however, the surface speed of the rollers remain unchanged, there must still be an increase in the power developed to reduce the greater quantity of material to the constant volume, and this power will be obtained by increase in the mean effective pressure on the piston. In this case, however, with the escribed volume constant and increased volume of fibre, there will remain a less volume for the juice to occupy, and there will be a less quantity of juice in the bagasse. Accepting the applicability of the experimental results discussed earlier in this chapter, this condition would only be obtained by the consumption of power much in excess of that computed proportionally to the quantity of fibre milled.

A different set of conditions obtains when the mill operates under a constant load, as afforded by the hydraulic gear. Evidently in this case the power consumed varies always in proportion to the quantity of fibre passing, since the opening between the top and back roll adjusts itself automatically. In order that the mill should accommodate itself to the passage of an increased quantity of fibre, more power must be developed by an increased speed, or by an increase in the mean effective steam pressure. In the first case the thickness of the blanket of bagasse may be maintained constant, and in the latter it may increase in depth proportionate to the quantity of fibre passing. Eventually, when the engine has developed its maximum power, more cane capacity can be obtained by decreasing the hydraulic load.

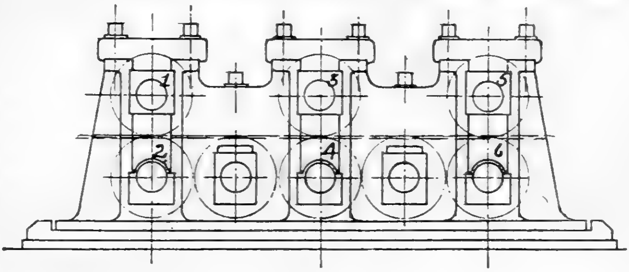

FIG. 131

The above discussion has only treated of the compression of fibre as between the top roll and the back roll, and has neglected the action of the top roll and front roll, the friction on the trash bar, the crushing effect between top roll and trash bar, and other minor influences. The results obtained in milling depend not only on the top and back roller setting, but on this acting in combination with the top and front roller setting, and, again, different conditions arise dependent on whether the mill is rigid or is operating under a constant hydraulic load. In the former case, what has been said with reference to top and back roll applies equally to top and front roll, and the power required to operate the mill will be the sum of that required to operate the top and front and top and back roller, considered independently of each other; and for every alteration in the position of either front or back roller relative to the top roller there will be a different consumption of power.

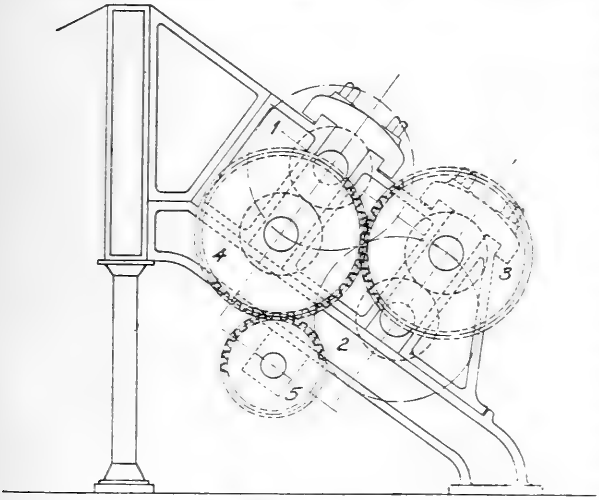

FIG. 132

In an hydraulic mill, however, the sum total pressure exerted on the bagasse is constant, and the problem the engineer has to consider is how to divide this pressure so as to obtain the best results. Evidently the greatest intensity of pressure will be obtained when top and back rolls are set metal to metal and when top and front rolls are set as far apart as possible. The converse arrangement would be to equalize the settings and obtain equal pressures as between top and front and top and back rollers. Practice in the Hawaiian Islands inclines to obtaining a greater intensity of pressure, treating the top and front roller as a feeding combination. In Java an opposite opinion holds, and it seems to be considered good practice to equalize the pressures as far as possible.

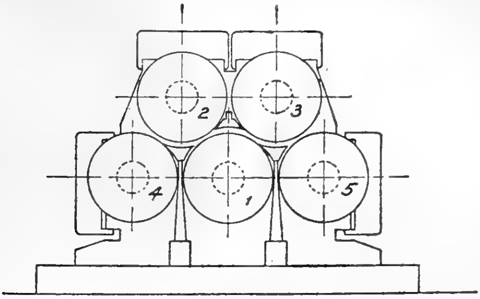

FIG. 133

Connected with the question of setting is the speed of operation which determines the thickness of the blanket of bagasse. In a rigid mill given a constant escribed volume, calculation would always indicate the same composition in the bagasse, independent of speed. The Java practice however, inclines to thicker blankets of bagasse and slower speeds, generally 14 to 15 feet per minute. Hawaiian and Cuban practice has adopted higher speeds, reaching up to a maximum of 30 feet per minute.

Below are collected certain typical mill settings. The variation between them is so great that perhaps they reflect nothing more than the personal equation of the engineers responsible.

HAWAIIAN AND ONE JAVAN* MILLS, ALL 78-IN. × 34-IN. OPERATING ON CANE PREPARED BY ONE CRUSHER, AND WITH ALL MILLS UNDER AN HYDRAULIC LOAD OF CIRCA 450 TONS.

TONS FIBRE	ROLLER SETTINGS, INCHES.								SURFACE SPEED, FT. PER MIN.			
	I.		II.		III.		IV.		I.	II.	III.	IV.
Per hour	Front.	Back.	Front.	Back.	Front.	Back.	Front.	Back.				
5·7	$1\frac{1}{4}$	$\frac{5}{16}$	$\frac{3}{4}$	$\frac{1}{8}$	$\frac{5}{16}$	0	$\frac{1}{4}$	0	20	21	22	23
7·1	$\frac{3}{8}$	$\frac{1}{32}$	$\frac{1}{4}$	$\frac{1}{32}$	$\frac{3}{16}$	0	$\frac{3}{16}$	0	21	18	20	22
4·7	$\frac{7}{8}$	$\frac{1}{4}$	$\frac{5}{8}$	0	$\frac{3}{8}$	0	$\frac{3}{8}$	0	17	14	15	18
5·4	$1\frac{1}{2}$	$\frac{1}{8}$	$\frac{5}{8}$	$\frac{1}{8}$	$\frac{3}{4}$	0	$\frac{3}{8}$	0	19	19	20	18
*5·0	1	$\frac{1}{2}$	$\frac{3}{4}$	$\frac{3}{8}$	$\frac{5}{8}$	$\frac{1}{4}$	$\frac{5}{8}$	$\frac{3}{16}$				

TONS FIBRE	TRASH TURNER SETTINGS. INCHES BELOW TOP ROLLER.											
	I.			II.			III.			IV.		
Per hour.	Toe.	Centre.	Heel.	Toe.	Centre.	Heel.	Toe.	Centre.	Heel.	Toe.	Centre.	Heel.
5·7	$1\frac{1}{2}$	2	$2\frac{1}{4}$	$1\frac{1}{4}$	$1\frac{1}{2}$	$1\frac{5}{8}$	$1\frac{1}{4}$	$1\frac{1}{2}$	$1\frac{5}{8}$	$1\frac{1}{8}$	$1\frac{1}{2}$	$1\frac{3}{4}$
7·1	1	$1\frac{3}{4}$	$2\frac{1}{4}$	$\frac{15}{16}$	$1\frac{1}{8}$	$2\frac{1}{8}$	$\frac{7}{8}$	$\frac{11}{16}$	2	$\frac{7}{8}$	$\frac{11}{16}$	2
4·7	$1\frac{5}{8}$	$1\frac{3}{4}$	$1\frac{7}{8}$	$\frac{13}{16}$	$1\frac{1}{4}$	$1\frac{3}{8}$	1	$1\frac{1}{8}$	$1\frac{1}{4}$	1	$1\frac{1}{16}$	$1\frac{5}{16}$
5·4	$1\frac{3}{8}$	$1\frac{1}{2}$	$1\frac{3}{4}$	$1\frac{1}{4}$	$1\frac{3}{8}$	$1\frac{5}{8}$	$\frac{7}{8}$	$1\frac{3}{16}$	$1\frac{3}{8}$	$\frac{5}{8}$	$1\frac{1}{8}$	$1\frac{1}{4}$
5·0		2			2			$1\frac{7}{8}$			$1\frac{3}{4}$	

JAVAN RIGID MILLS, 60-IN. × 30-IN. OPERATING ON CANE PREPARED BY ONE CRUSHER, AND AT A SURFACE SPEED OF CIRCA 14 FT. PER MIN.

TONS FIBRE	ROLLER SETTINGS, INCHES.						DISTANCE CENTRE OF TRASH TURNER FROM TOP ROLLER, INCHES.		
	I.		II.		III.		I.	II.	III.
Per hour.	Front.	Back.	Front.	Back.	Front.	Back.			
3·1	1	$\frac{1}{2}$	$\frac{3}{4}$	$\frac{3}{8}$	$\frac{5}{8}$	$\frac{1}{4}$	$2\frac{1}{4}$	$2\frac{1}{4}$	2
3·5	$1\frac{1}{4}$	$\frac{5}{32}$	$1\frac{1}{16}$	$\frac{5}{8}$	1	$\frac{11}{32}$	—	—	—
4·3	$1\frac{1}{4}$	$\frac{5}{8}$	$1\frac{1}{16}$	$\frac{1}{2}$	1	$\frac{1}{2}$	—	—	—

Multiple Roller Mills.—Robinson took out a patent (8731, 1840) for a 4-roller mill, with the three rollers arranged round the circumference of a fourth central roller, which was twice the diameter of any of the others, this central roller being the driven roller, which in turn drove the other three. The same arrangement forms the essential part of Le Blanc's patent (5494 of 1883), *Fig.* 130; and a central or "*primal*" roller, with up to twelve smaller rollers arranged round it in various combinations, forms the subject of patents granted to Guy (7725 of 1887, and 2416 of 1890).

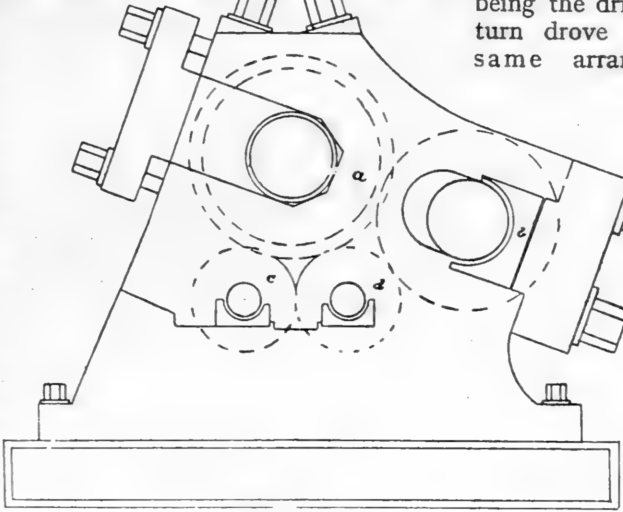

FIG. 134

The addition of a fourth roller as a feeding roller appears in Guy's patent (7745 of 1885) and Lateulade's (12208 of 1892).

Robinson's patent (8731 of 1840) also claimed a 6-roller unit, the three upper rollers being vertically over the three lower rollers.

In mills of this type, *Fig.* 131, the driven rollers are the two middle rollers, 3 and 4, the latter of which gears with and drives rollers 2 and 6, these driving rollers 1 and 5. The gears are mounted on opposite ends of the shafts. Patents for construction similar to this have been granted to Hosack (2316 of 1869) and Cail (2212 of 1870). A mill of this type with eight rollers was erected in 1884 at Courcelles in Guadeloupe by Brissoneau and La Haye.

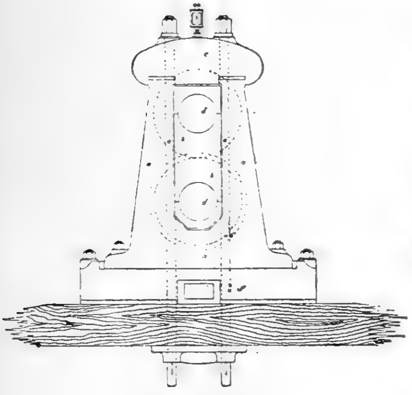

FIG. 135

Robertson and Hudson's patent (602 of 1887) preferably included four rollers, *Fig.* 132. The driven pinions were carried on a separate shaft, 5, gearing on one end with roller 2, which drove roller 1, and on the other end with roller 4 driving roller 3.

A multiple roller mill with an odd number of rollers was patented by Rousselot (2572 of 1887), by Deacon (15976 of 1888), by Guy (2796 of 1891), and by Hughes (U.S. 395837 of 1889). All these are essentially the same, and are indicated in *Fig.* 133. The drive was from the lower central roller, 1, which geared with the two upper rollers, 2 and 3, which in turn drove the two outer lower rollers, 4 and 5. This arrangement is also seen in Payen's mill, referred to in books of date about 1850.

The De Mornay patent is 13709 of 1851; the improved form due to Chapman (4209 of 1888) is shown in *Fig.* 134, and of this a number have been built, some still remaining in operation.

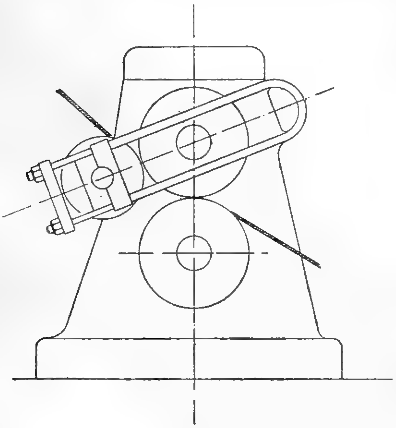

FIG. 136

In most of these patents it is easy to see that the conception of the patentee was to improve the extraction of *the* mill, the idea of the *train* of mills not having then been conceived.

The Two-Roller Mill.—The 2-roller mill, as shown in *Fig.* 135, followed the 3-roller, and was brought out as a re-pressing or macerating mill, and also with the object of eliminating the trash turner. Chapman's patent (4411 of 1875) claimed the 2-roller mill in connection with Russel's maceration scheme (4094 of 1874), and a very similar patent was taken out by Rousselot (5050 of 1876). In a later patent (2280 of 1878), Rousselot added a small feed roller to the 2-roller, as shown in *Fig.* 136. At the same time the 2-roller mill was developed by Alexander Young in the Hawaiian Islands. Difficulty in feeding whilst maintaining the pressure prevented the adoption of this type. To overcome this trouble the forced feed of Riley (patent 17776 of 1891) was tried, *Fig.* 137. In this device a reciprocating pusher bar, *a*, is driven from an eccentric or crank through a rocking shaft *b*, and forces the bagasse into the mill.

Very similar arrangements were patented later by Fletcher (16118 of 1892) and Kidd (15301 of 1893). The 2-roller mill has disappeared from modern practice, and a number which were installed are doing duty as crushers.

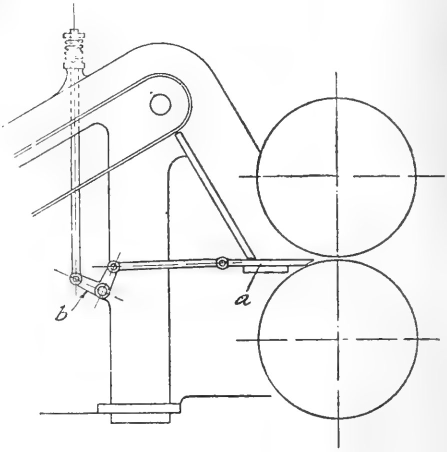

FIG. 137

Preparation of Cane for Milling.—The cane may be considered as a hollow cylinder reinforced by transverse partitions (the nodes). Such a structure is well adapted to resist an external pressure. Rupture of the cylinder, combined with a rendering of the cane into a fine state of division, is the object of the devices used to prepare the cane for milling. These devices may be classed as saws, knives, shredders, crushers, and hammers. The first-named class has never come into extended use, and at most has been applied only in isolated cases.

The earliest British patent on this matter was issued to Blanchard

(753 of 1858,) who claimed a system of saws on parallel rotating shafts, the saws on one shaft acting in the spaces between the saws on the other. A patent on a similar principle was granted to Easton and Hoyland (642 of 1888).

Bonnefin's apparatus (1185 of 1877) consisted of a gang of parallel saws alternately raised and drawn across the canes, which were presented to the action of the saws in a cradle. Another system of saws, patented by Reynoso (1558 of 1875 and 1492 of 1877) included a drum, on which was mounted a series of staggered or drunken saws, set oblique to the axis, so that on rotation the system formed virtually a continuous circular saw.

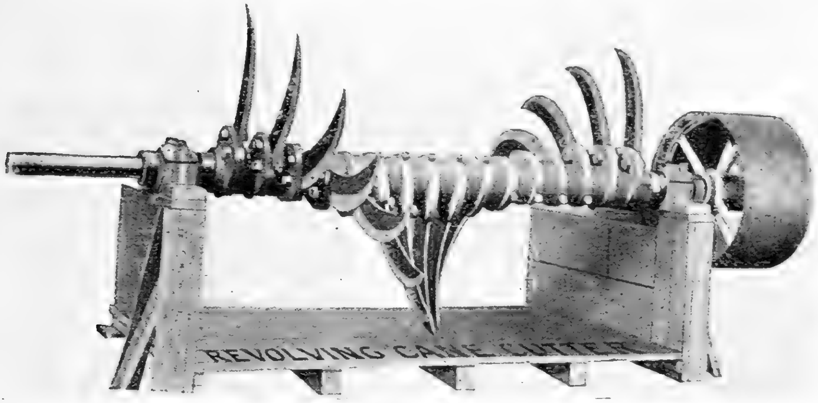

FIG. 138

The first patent on knives as a preparatory device is that of De Coster (1921 of 1854), who employed a rapidly rotating disc carrying knives or cutters, and this device in various forms remains in use.

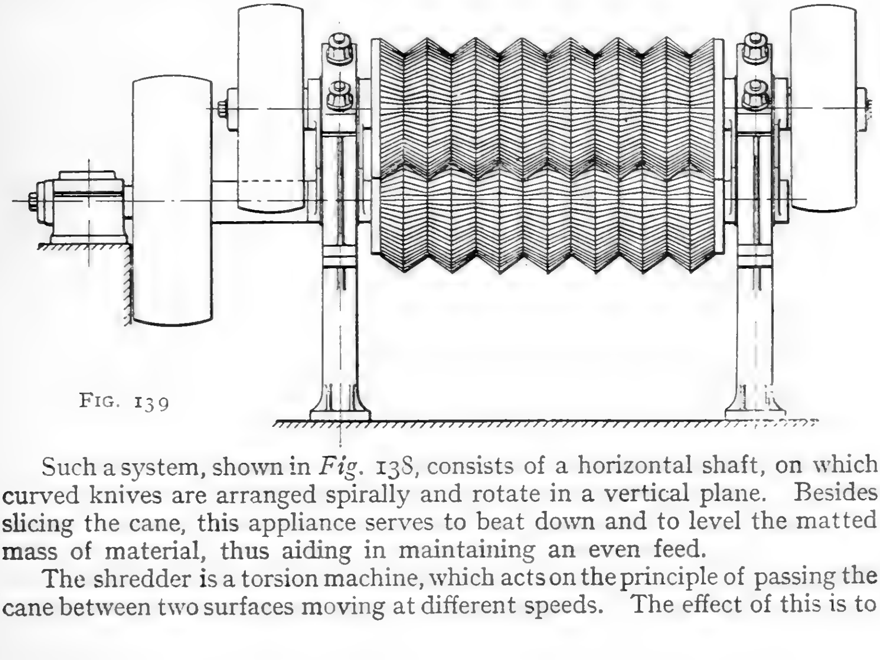

FIG. 139

Such a system, shown in *Fig.* 138, consists of a horizontal shaft, on which curved knives are arranged spirally and rotate in a vertical plane. Besides slicing the cane, this appliance serves to beat down and to level the matted mass of material, thus aiding in maintaining an even feed.

The shredder is a torsion machine, which acts on the principle of passing the cane between two surfaces moving at different speeds. The effect of this is to twist the wall of the cylinder, separating the fibro-vascular bundles which make up the wall and destroying the resistance to external pressure. The first patent of this type is due to Faure (3003 of 1879) who employed a rotating drum, on which was cut a series of helicoidal teeth operating in combination with a fixed counter plate set eccentric on the drum. Shredders as actually used, however, have employed two drums, co-acting with each other, where the upper drum revolves at a higher rate of speed than the lower, the revolutions per minute usually being about 135 and 35 respectively.

This system was patented by Cail and Ferron (379 of 1883), who formed on the drums helical threads, the section of which was a right-angled triangle, the threads on the upper cylinder running in the opposite direction to those on the lower.

The form of shredder which has been most commonly used is indicated in Chapin's patent (2553 of 1885) and in Hungerford's patent (U.S. 346817 of 1886). This patent claims a shaft on which are arranged rings or annular discs, the peripheries of which are bevelled off on both sides at 45°. The rings are pitched so that the rings on one shaft intermesh, but do not meet, with the rings on the other. This type of shredder is shown in *Fig.* 139.

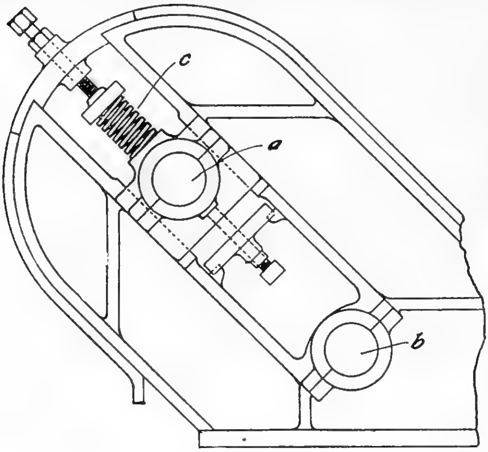

FIG. 140

The successful use of the shredder seems to be due to the housing patented by Fiske (13955 of 1887). This is shown in *Fig.* 140. It combined with adjustable upper and lower bearings *a* and *b* the control of the pressure by a spring, *c*, so that the upper roller was free to move if the feed became too heavy, or if a piece of iron or other foreign matter entered.

A patent granted to Kidd (15297 of 1893) includes the above two devices with only small differences of detail.

The crusher as a preparatory device was distinctly introduced by Thomson and Black in their patent 2586 of 1882, and is often included in the term "5-roller mill." They extended the housings of an ordinary 3-roller mill to receive an additional pair of rollers, on which were formed a series of circumferential deep grooves and ridges. The ridges in one roller operated in the grooves of the other. This type of crusher is often referred to as "splitting rollers," and it remains a very extended design.

A crusher which has been and is still very widely used is that due to Krajewski (patent 12012 of 1886), *Fig.* 141. It claims the combination of rollers with more or less sharp zigzag corrugations in the direction of the rollers, the teeth of one intermeshing, but not coming into contact, with the teeth of the other. The action of this device both crushes the cane and cuts it into small pieces. The cutting action is dependent on the setting of the rollers. Another type of crusher is that due to Marshall (U.S. 584183, 1897), shown in *Fig.* 142.

Crushers of the above-mentioned types have come to be regarded as an essential part of the train of mills. Their object is not so much to extract juice as to prepare the matted mass of cane for subsequent milling, presenting an even, level, disintegrated blanket to the first mill of the train. Their introduction into Cuba was based on increase in capacity afforded to existing plants rather than on any increase in the quantity of juice extracted. It is for the same reason that the double and even the triple crusher has been very lately introduced into that island.

The hammer was the original preparatory device, as shown in Curtis's patent (13014 of 1850), which proposed the use of hammers falling vertically upon cane supported on an anvil. Searby's patents (U.S. 1146464 and 1185009, 1916) adapt the swing hammer to the disintegration of cane. This device, shown in *Plate* XXIII, includes a horizontal shaft, to which are attached a series of loose hammers arranged six in any vertical plane. The hammers are $\frac{5}{16}$-in. or $\frac{5}{8}$-in. by $2\frac{1}{2}$-in., and the shaft makes 1,200 r.p.m., so that 7,200 blows are struck on the cane per minute. The result is to separate completely the fibro-vascular bundles, and to reduce the cane to a material of the nature of "excelsior."

This apparatus is preferably used in conjunction with a crusher, and is installed with the view of increasing both capacity and extraction. The independent results reported from its use in Hawaii in conjunction with 12-roller trains of mill are very superior to those obtained with any other combination.

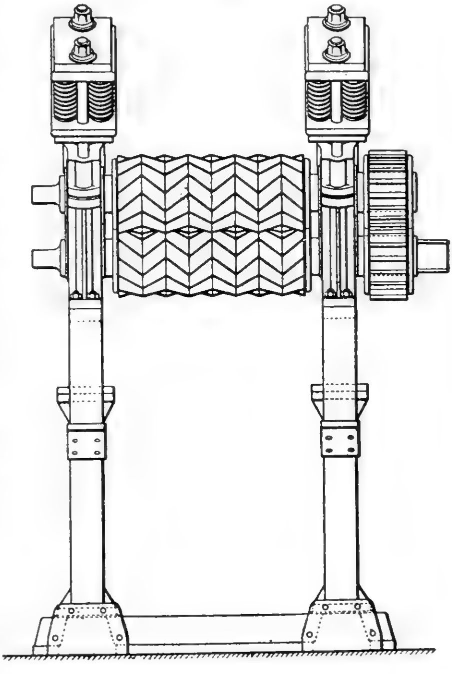

FIG. 141

Crusher Rollers and Roll Groovings.—The question whether rollers should be smooth or grooved is discussed in Tomlinson's "Encyclopædia of Arts and Sciences," published in 1854.

The object of grooving rollers is to increase the "gripping" area, and thereby the capacity of the mill. The modern practice is to use triangular circumferential grooves, three to the inch, the grooves being pitched so as to mesh. The combination of the crusher and the mill in one unit seems to date from Aitken and Mackie's patent (660 of 1907). This patent claims the surface of a roller formed with a series of short ridges arranged at substantially 45° to the axis, and each series at right angles to the adjacent series. The ridges form a series of figures with triangular ends and trapezoidal sides. This type has become well known as the "Diamond top roll crusher." Since it appeared a large number of "figured" rollers, including a great variety of geometrical patterns, have been patented. The adoption of these devices has not become general.

For an entirely different purpose are the drainage grooves introduced by Messchaert (patent 8162 of 1914). These are deep circumferential grooves about 1½-in. or 1¾-in. by $\frac{3}{16}$-in., spaced about 4 inches apart. They are placed on the feed roller, and serve to conduct away the juice expressed by top and feed roller. Otherwise this juice cannot freely escape, and difficulties in feeding occur which are often attributed to the setting of the trash turner. The introduction of this system has been attended with increased capacity, increased extraction, and remarkably low water content of the bagasse (especially when applied simultaneously to the back roller), and the possibility of using very large quantities of imbibition water without choking the mill. In many districts this system has become standard practice. That the full benefit may be obtained from these grooves, it is necessary that they be kept free from bagasse; they are therefore operated in combination with scrapers usually attached to a bar bolted to the housings.

Control of Mill Operations.—In the modern cane mill the only non-rigid element is the top roller, which lifts in proportion to the quantity of material passing. A record of this movement will then give a measure of the quantity of cane passing at any moment, of the regularity of the feed, of any change in the nature of the cane, of the sensitiveness of the movement (or freedom with which the hydraulic ram operates), and of the times at which the mill starts and stops. The apparatus of Deerr (patent 6574 of 1915), *Plate* XXIII, consists of a rod attached at *E* to the top brass of the top roller, which moves with the movement of the latter. By means of a parallel motion similar to that employed on steam engine indicators, this vertical movement is multiplied and recorded on the chart on the drum *A*, eight inches in diameter, which makes one revolution in twenty-four hours. The recording apparatus is carried on the adjustable system, *B*, *C*, *D*, and the connecting rod passes through a stuffing box, *F*, designed to give if any undue strain is placed thereon.

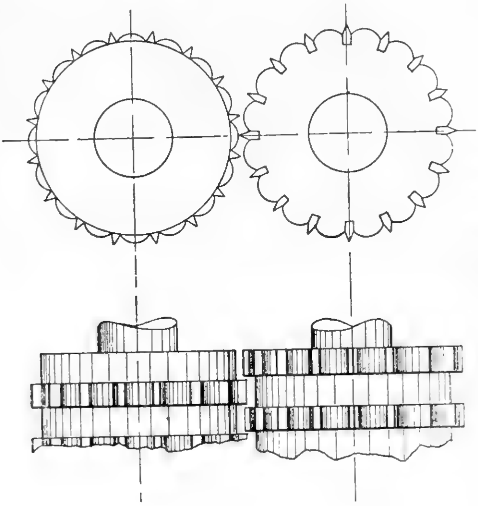

FIG. 142

Algebraical Analysis of the Process of Milling.—Consider the cane as porous material, the fibre, which has soaked up and holds by means of capillary attraction a liquid, the juice. On the application of pressure to this material the juice is expressed, and eventually a point is reached when pressure fails to afford any more juice. This operation will be referred to as the "dry crushing," and the resultant residue of bagasse as the "dry crushed bagasse." The second process consists of the addition of water to the dry crushed bagasse, which water mixes with and dilutes the residual juice. On again applying pressure a dilute juice is obtained, and by continuing the process eventually all the sugar present in the cane may be obtained. The bagasse resulting from such operations will be referred to as the "wet crushed

PLATE XXIII

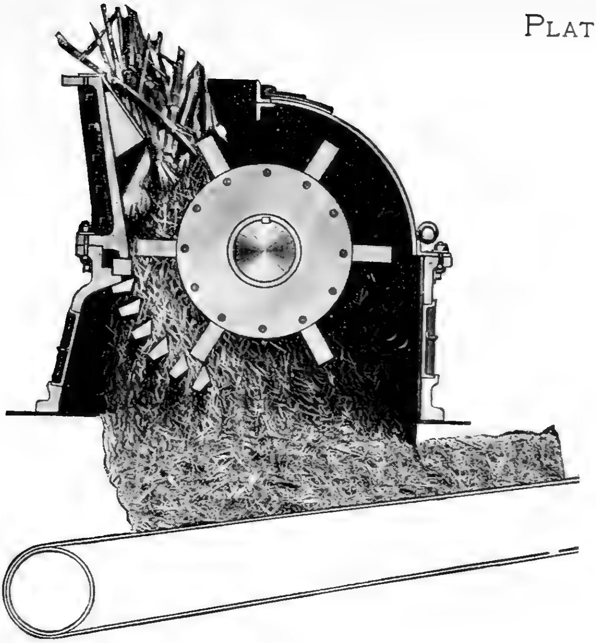

SEARBY SHREDDER.

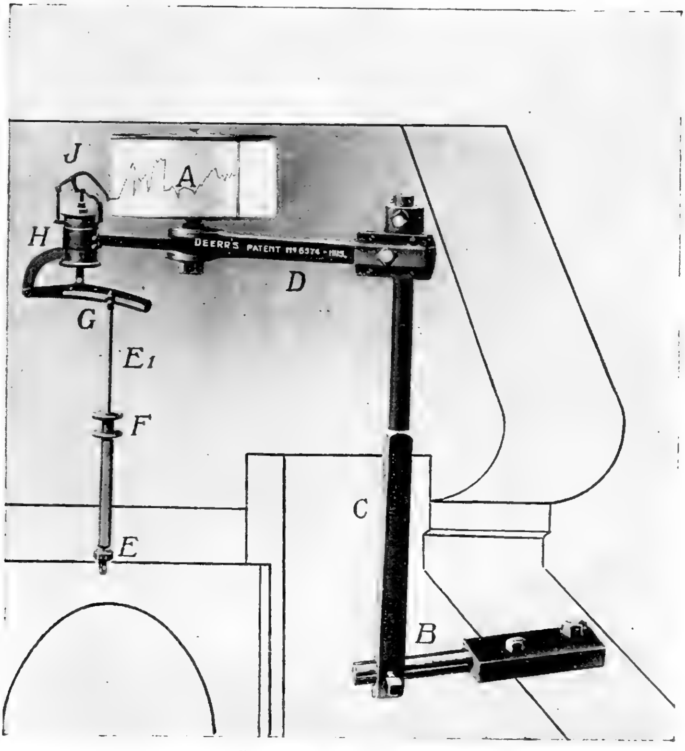

DEERR INDICATOR.

PLATE XXIV.

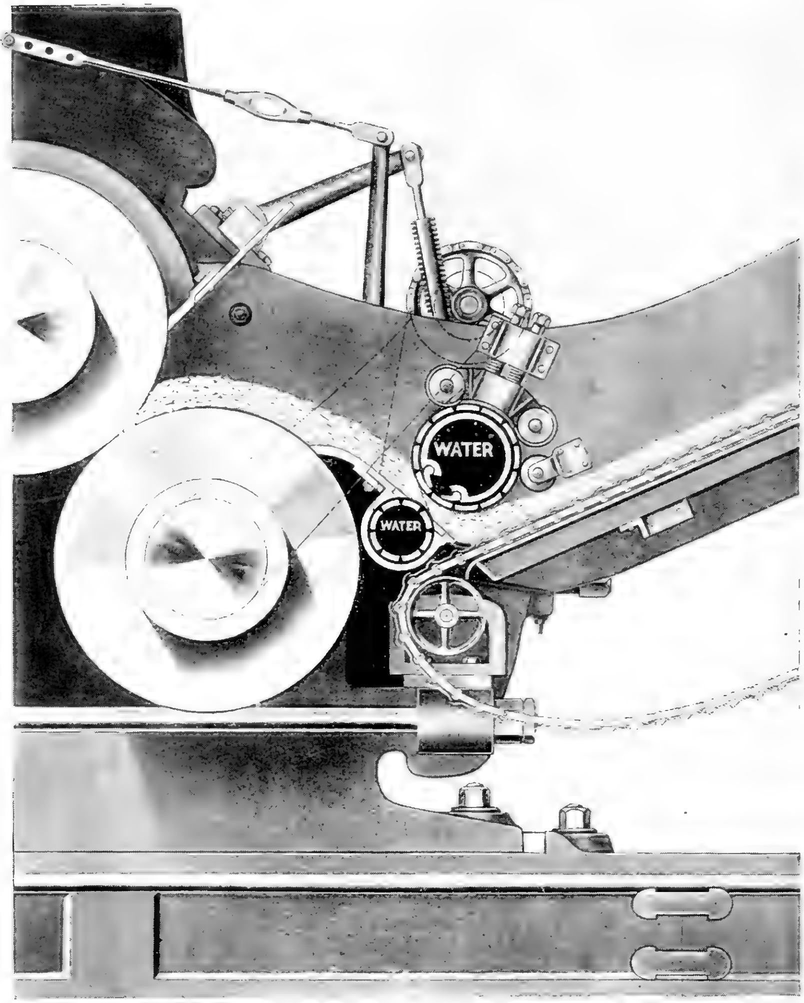

THE DEERR MACERATOR.

bagasse." This process is variously known as imbibition, maceration, lixiviation, saturation, or dilution.*

The water used in imbibition may be applied in various ways, and of these there may be distinguished :—1. Simple Imbibition where water only is used at each of the wet crushing units, the process being classed as single, double, treble, etc., simple imbibition depending on the number of units; and 2. Compound Imbibition, where water is only used at the last mill, the dilute juice therefrom being used as the diluent before the penultimate mill, that from this mill going to the antepenultimate mill, and so on. A single compound process indicates the use of only one wet crushing unit, and is hence the same as single simple imbibition. Double, treble, etc., compound imbibition imply the use of two, three, etc., wet crushing units.

It will be apparent that the number of units employed in the dry crushing has no effect in determining the type of process employed, the break in the continuity of the schemes occurring with the addition of water or other diluent. Experience has shown, however, that to obtain a satisfactory dry crushing not less than two three-roller units, acting in combination with some preparatory device, are necessary; accordingly, a double compound installation will often consist of a two-roll crusher, followed by four three-roller mills. Such a combination is usually referred to as a crusher and twelve-roller tandem; actually, however, the crusher and first six rollers may be regarded as but one unit.

Let the weight of canes be unity, and let the fibre per unit weight of cane be f, whence the weight of juice is $1 - f$.

Let juice be expressed in the dry crushing until the fibre becomes m per unit weight of bagasse.

Then $\frac{f}{m}$ = weight of bagasse per unit weight of cane.

$$1 - \frac{f}{m} = \frac{m - f}{m} = \text{Weight of juice expressed per unit weight of cane.}$$

$$\frac{m - f}{m(1 - f)} = \text{Weight of juice expressed per unit of juice in cane.}$$

$$\frac{f(1 - m)}{m} = \text{Weight of juice in bagasse per unit weight of cane.}$$

$$\frac{f(1 - m)}{m(1 - f)} = \text{Weight of juice in bagasse per unit of juice in cane.}$$

Generally $m = 0 \cdot 50$ is indicative of superior work, and this constant value will be adopted throughout this section when any numerical calculations are given. As f increases so also does the value of $\frac{f}{m}$, while that of $\frac{m - f}{m}$ decreases. Thus with $f = 0 \cdot 1$ and $m = 0 \cdot 5$, the value of the latter or the weight of juice expressed is $0 \cdot 80$, a figure which falls to $0 \cdot 68$ when f rises to $0 \cdot 16$. Evidently in both cases the crushing is equally good although

---

* Maceration was the term used by Dombasle in 1831 in connection with his process for the systematic extraction of beets. When the systematic extraction of sliced beets was established by Robert about 1860 the term diffusion was properly employed. Maceration as applied to cane milling in the processes usually followed is a misnomer, and though in general use will be here discarded in favour of imbibition, the term always used by French writers, and one which correctly describes the process. Dilution indicates the effect rather than the means while saturation has no proper significance in this connection. Lixiviation is also inappropriate and is used only in reference to the Perichon process, confined to Egypt.

the quantities of juice obtained are very different. Similarly the values of $\frac{m-f}{m(1-f)}$, or of the juice expressed per unit originally present for the example, are 0·8889 and 0·8095.* Now to $\frac{f}{m}$ bagasse let w water be added and let the water mix completely with the $\frac{f(1-m)}{m}$ residual juice.†

The weight of diluted juice now becomes

$$\frac{f(1-m)}{m} + w = \frac{f + wm - fm}{m}$$

Let the wet bagasse be again crushed till it contains m fibre, when w dilute juice is obtained and per unit of original juice present in the dry crushed bagasse there is obtained $w \div \frac{f + wm - fm}{m} = \frac{wm}{f + wm - fm}$

Now let the value of $\frac{wm}{f + wm - fm}$ be denoted by r for simplicity and let the juice in the dry crushed bagasse be unity. Then with the addition of w water r juice is obtained and $1 - r$ passes away in the wet crushed bagasse.

Again adding w water and again crushing to a fibre content m, the second wet crushing affords $r(1-r)$ juice, the recovery at this point being $r + r(1-r)$, and generally in n operations the recovery is given by the expression

$$r + r(1-r) + r(1-r)^2 + \cdots\cdots + r(1-r)^{n-1} = 1 - (1-r)^n$$

This formula is the general expression for determining the recovery in simple imbibition schemes, and its application is of most interest when w the added water is constant; that is to say, in a single process w water is used once, in a double process $\frac{w}{2}$ water is used at both first and second wet crushing mills, and generally $\frac{w}{n}$ water is used at each mill of a train of n mills.

When single imbibition is used, the value of r in the series above is

$$\frac{wm}{f + wm - fm} = \frac{wm}{wm + f(1-m)}$$

Substituting $\frac{w}{n}$ for w the value of r becomes $\frac{wm}{wm + nf(1-m)}$

As n is the only variable in this expression, it may for convenience be written $\frac{a}{a+nb}$ where a and b are constants and the recovery with n-fold imbibition will be $1 - \left(1 - \frac{a}{a+nb}\right)^n$, and when n is a positive integer this expression increases as n increases.

---

* The exactness of this expression depends on the uniformity of the juice throughout the cane. This condition does not obtain and the earlier expressed juice is denser and sweeter than that obtained later. Accordingly the actual recovery of sugar is greater than the formula indicates. To avoid quite unnecessary complications in the establishment of certain principles, a uniform composition is accepted.

† Complete admixture never takes place, but its assumption is required for the convenient development of the theory. In applying the formulæ obtained to actual practice it is necessary to introduce a coefficient of admixture of value such as experience indicates.

As a numerical example, let $f = 0\cdot 1$, $w = 0\cdot 1$, and $m = 0.5$. Then,

$$r_1 = \frac{wm}{wm + f\,(1 - m)} = 0\cdot 500, \text{ and } 1 - (1 - r_1) = 0\cdot 500 = \text{recovery.}$$

$$r_2 = \frac{wm}{wm + 2\,f\,(1 - m)} = 0.333, \text{ and } 1 - (1 - r_2)^2 = 0\cdot 555 = \text{recovery.}$$

$$r_3 = \frac{wm}{wm + 3\,f\,(1 - m)} = 0\cdot 250, \text{ and } 1 - (1 - r_3)^3 = 0\cdot 578 = \text{recovery.}$$

$$r_4 = \frac{wm}{wm + 4\,f\,(1 - m)} = 0\cdot 200, \text{ and } 1 - (1 - r_4)^4 = 0\cdot 589 = \text{recovery.}$$

The expression for compound imbibition may be thus obtained.*

Let there be two mills in series, to the first one of which is delivered bagasse containing unit quantity of sugar. To this mill is returned also the dilute juice recovered through the addition of water at the mill second in series. Let the constant factor of recovery (i.e., $\frac{wm}{wm + f\,(1 - m)}$) be denoted by r. Let e_1 and e_2 be the actual quantities of material obtained at the first and second mills. Then e_1 is the recovery, and it is desired to express e_1 in terms of r and n, where n is the number of mills, in this case two.

Now $1 + e_2$ is the quantity presented to the first mill, when e_1 is recovered. Therefore $r = \frac{e_1}{1 + e_2}$, or $e_1 = r\,(1 + e_2)$.

The quantity passed on to the mill second in series is

$$1 + e_2 - r\,(1 + e_2) = (1 + e_2)\,(1 - r).$$

Of this quantity r is obtained, so that

$$r = \frac{e_2}{(1 + e_2)\,(1 - r)}$$

whence $$e_2 = r\,(1 + e_2)\,(1 - r) = \frac{r - r^2}{1 - r + r^2}$$

But $$e_1 = r\,(1 + e_2)$$

wherefore $$e_1 = r\left(1 + \frac{r - r^2}{1 - r + r^2}\right) = \frac{r}{1 - r + r^2} = \frac{r}{r + (1 - r)^2}$$

In the case of three mills in series the solution appears as below, it being understood that water is used at the last mill only, the dilute juice there expressed being employed as the diluent at the mill second in series, the product obtained here being returned to the first mill.

In the first mill $$r = \frac{e_3}{1 + e_2}, \text{ or } e_3 = r\,(1 + e_2)$$

The second mill receives $1 + e_2 - r\,(1 + e_2) = (1 + e_2)\,(1 - r)$

At the second mill $$r = \frac{e_2}{(1 + e_2)\,(1 - r) + e_3}$$

whence $$e_2 = r\,(1 + e_2)\,(1 - r) + e_3\,r.$$

The third mill receives $$e_3 + (1 + e_2)\,(1 - r) - \left\{r\,(1 + e_2)\,(1 - r) + e_3 r\right\}$$
$$= (1 + e_2)\,(1 - r)^2 + e_3\,(1 - r).$$

At the third mill $$r = \frac{e_3}{(1 + e_2)\,(1 - r)^2 + e_3\,(1 - r)}$$

whence $$e_3 = r\,(1 + e_2)\,(1 - r)^2 + e_3\,r\,(1 - r).$$

---

* For this solution I am indebted to Mr. Lewis Wachenberg of the Reserve Refinery, Louisiana.

But $$e_2 = r\,(1 + e_2)\,(1 + r) + r\,e_3.$$

wherefore, substituting for e_3,

$$e_2 = \frac{r^3 + 3\,r^2 + 2\,r}{1 - r^3 + 3\,r^2 - 2r}$$

and $$e_1 = r\,(1 + e_2)$$

whence $$e_1 = \frac{r}{1 + r^3 - 3\,r^2 - 2\,r} = \frac{r}{r + (1 - r)^3}$$

and, generally, the recovery in a system of compound imbibition is given by the expression $\frac{r}{r + (1 - r)^n}$ where r is the constant factor of recovery and n is the number of mills in series.

As a numerical example, again let $f = 0\cdot1$, $w = 0\cdot1$ and $m = 0\cdot5$ when

$$r = \frac{wm}{wm + f\,(1 - m)} \text{ and}$$

Single compound: $\frac{r}{r + (1 - r)} = 0\cdot500 =$ recovery.

Double compound: $\frac{r}{r + (1 - r)^2} = 0\cdot667 =$ recovery.

Treble compound: $\frac{r}{r + (1 - r)^3} = 0\cdot800 =$ recovery.

Quadruple compound: $\frac{r}{r + (1 - r)^4} = 0\cdot889 =$ recovery.

Comparison of these results with those already obtained for the simple scheme indicates the superiority of the compound process, especially when the number of units increases, as in this case the simple scheme does not give much benefit as due to the subdivision of the water.

It will be readily seen from inspection of the above analysis that the dry crushing has a very great effect in determining the total recovery, and that it is only by the use of excessive quantities of water that compensation for an inferior dry crushing can be obtained. Attention to this point has been a dominant factor in determining very high extractions, such as are those which are obtained in the Hawaiian Islands.

A second important factor to be considered is the fibre in the cane, and as this increases so decreases the extraction due to the dry crushing. A greater quantity of sugar remains in the bagasse, but if this is operated upon efficiently very high extractions with a high fibre content in the cane can be economically obtained. For example, with $f = 0\cdot1$ and $m = 0\cdot5$ the dry crushing will recover 0·8889 of the sugar in cane, as compared with 0·8235 when f rises to 0·15. With treble compound imbibition, and with $w = f$ (i.e., added water 10 per cent. in the one case and 15 per cent. in the other) the value of r is 0·5 and of $\frac{r}{r + (1 - r)}{}^3$ is 0·8. The total recoveries are then $0\cdot8889 + 0\cdot5 \times 0\cdot111 = 0\cdot9777$, and $0\cdot8235 + 0\cdot5 \times 0\cdot1765 = 0\cdot9647$.

These results are of the same order of magnitude; but if single simple imbibition be used the total extractions are reduced to 0·9444 and 0·9117. This example indicates the greater importance of long trains and systematic imbibition when the fibre is high, and in this case also it is fortunate that the fuel is plentiful.

Experimental results comparing trains of different numbers of units are hard to obtain, but the following from the writer's notebook is of interest. The data were obtained following the breakdown of one unit of a four-mill and crusher train, reducing the combination to a three-mill and crusher installation. The periods compared are each of three weeks' duration, and by a happy coincidence the tonnage ground and the fibre in the cane are nearly the same.

	Purity first mill juice.	Purity last mill juice.	Purity mixed juice.	Tons cane per hour.	Fibre % cane.	Dilution % normal juice.	Extraction
Crusher and three mills	91·1	80·7	87·0	31·5	13·8	27·0	92·35
Crusher and four mills	91·7	81·3	88·2	31·7	13·9	22·1	95·56

As affording a conspectus of the combined effect of fibre and methods, values of the recoveries under the above-developed expressions are given in the annexed table for values of *f* 0·10 to 0·15, of *w* 0·10 to 0·30 and *m* 0·50. This table is academic rather than representative of results of record, since in its construction complete admixture of the added water is assumed. Its object is to give a perspective view of the effect of the different controlling factors. It neglects two sources of error:—1. The recovery due to the dry crushing is always greater than the calculation implies due to the superior quality of the first-expressed juice. 2. Admixture of the added diluent with the residual juice is never complete. To a certain extent these influences are compensatory.

TABLE GIVING COMPUTED EXTRACTIONS IN DIFFERENT SYSTEMS OF MILLING FOR VALUES OF FIBRE 10 TO 15 PER CENT. ON CANE, ADDED WATER 10 TO 30 PER CENT. ON CANE, FIBRE IN BAGASSE 50 PER CENT. VALUES REFERRED TO SUGAR IN CANE AS UNITY.

FIBRE.	10%	11%	12%	13%	14%	15%
Dry crushing, water = 0 ...	·889	·877	·864	·850	·838	·823
WATER 10 PER CENT.						
Single simple imbibition ...	·944	·936	·925	·914	·905	·893
Double ,, ,, ...	·950	·941	·931	·921	·910	·900
Treble ,, ,, ...	·953	·944	·935	·925	·913	·904
Quadruple ,, ,, ...	·954	·945	·936	·926	·914	·905
Single compound ,, ...	·944	·936	·925	·914	·905	·893
Double ,, ,, ...	·963	·954	·946	·937	·927	·916
Treble ,, ,, ...	·978	·973	·968	·963	·958	·952
Quadruple ,, ,, ...	·987	·984	·980	·976	·972	·968
WATER 20 PER CENT.						
Single simple imbibition ...	·963	·957	·949	·942	·934	·925
Double ,, ,, ...	·972	·966	·960	·953	·945	·936
Treble .. ,, ...	·976	·970	·965	·959	·951	·942
Quadruple ,, ,, ...	·978	·972	·967	·961	·953	·944
Single compound ,, ...	·963	·957	·949	·942	·934	·925
Double ,, ,, ...	·984	·979	·975	·970	·965	·961
Treble ,, ,, ...	·991	·989	·986	·984	·981	·979
Quadruple ,, ,, ...	·999	·987	·994	·992	·989	·987
WATER 30 PER CENT.						
Single simple imbibition ...	·972	·966	·961	·955	·948	·942
Double ,, ,, ...	·982	·977	·972	·967	·962	·957
Treble ,, ,, ...	·986	·982	·978	·973	·968	·962
Quadruple ,, ,, ...	·988	·984	·980	·975	·970	·964
Single compound ,, ...	·972	·966	·961	·953	·948	·942
Double ,, ,, ...	·991	·989	·986	·983	·980	·977
Treble ., ,, ...	·998	·996	·994	·992	·989	·987
Quadruple ,, ,, ...	·999	·999	·998	·997	·997	·996

The Economic Limit of Extraction.—In schemes employing the addition of water, expense is frequently incurred in the evaporation thereof, though often the fuel afforded by the bagasse is sufficient to treat considerable quantities of water. In what follows the factory is supposed to be balanced when dry crushing is operated; that is to say, under these conditions the bagasse just suffices for the operation. All expenses then connected with imbibition are to be charged to the debit side of the ledger.

Let there be unit quantity of juice (or of sugar) in the dry crushed bagasse to which w water is added. There is then obtained on crushing $\frac{w}{1 + w}$ sugar per unit originally present. Substituting $\frac{w}{1 + w}$ for r in the expressions already found, the quantity of sugar obtained in the different systems is:—

Single simple imbibition: $\frac{w}{1 + w} = 1 - \frac{1}{1 + w}$

Double simple imbibition: $1 - \left(\frac{2}{2 + w}\right)^2$

n-fold simple imbibition: $1 - \left(\frac{n}{n + w}\right)^n$

Single compound imbibition: $\frac{w}{1 + w} = \dfrac{\frac{w}{1 + w}}{\frac{w}{1 + w} - \left(1 - \frac{w}{1 + w}\right)}$

Double compound imbibition: $\dfrac{\frac{w}{1 + w}}{\frac{w}{1 + w} - \left(1 - \frac{w}{1 + w}\right)^2}$

n-fold compound imbibition: $\dfrac{\frac{w}{1 + w}}{\frac{w}{1 + w} - \left(1 - \frac{w}{1 + w}\right)^n}$

Now consider the case where the bagasse contains 50 per cent. fibre (f) and 50 per cent. juice. Let water (w) be added equal to f, $2f$, etc. Then in all cases these expressions on computation give the sugar which can be recovered per unit present in the bagasse and independent of the quantity of fibre in the cane; that is to say, with canes containing 10 per cent. fibre, 20 per cent. of added water will recover the same percentage of sugar from that present in the bagasse as 24 per cent. when the canes contain 12 per cent. of fibre.

In the graphs in *Figs.* 143 and 144 are shown values of these expressions for the values of $w = f$, $2f$, etc., i.e., water 10 per cent., 20 per cent., etc., on cane when the fibre is 10 per cent. on cane, and so on.

The value of the additional sugar obtained will be any one of these expressions multiplied by a constant obtained from a knowledge of the selling price of sugar, cost of manipulation, of containers and of freight, etc. The cost of obtaining the sugar will be mainly the cost of evaporating the added water, together with the interest on the prime cost of the additional heating surface necessary. These two items may reasonably be regarded as a lineal function of the added water or briefly by $K w$, where K is constant.

The net profit to the producer will therefore be given in the case of simple imbibition by the expression $C\left\{1-\left(\frac{n}{n+w}\right)^{n}\right\}-K\,w$, where C and K are constants and n is the number of wet crushing mills. Similarly the corresponding expression for compound imbibition is

$$C\left\{\frac{\frac{w}{1+w}}{\frac{w}{1+w}-\left(1-\frac{w}{1+w}\right)^{n}}\right\}-K\,w$$

The economic limit of extraction will be obtained when w is chosen, so that these expressions are a maximum. Solutions of this problem are given for completeness.

The general formula when using simple imbibition may be written :—

$$C\left\{1-\left(\frac{n}{n+w}\right)^{n}\right\}-K\,w = \text{maximum},$$

or $1-n\,(n+w)^{-n}-L\,w=$ maximum, where $L=\frac{K}{C}=$ constant.

Differentiating and equating to zero

$$n^2\,(n+w)^{-(n+1)}-L=\text{zero}$$

Solving, $$w=\frac{n\left(1-L^{\frac{1}{n+1}}\right)}{L^{\frac{1}{n+1}}}$$

For example, the maximum value of the expression

$$4\left\{1-\frac{2}{(2+w)^2}\right\}-0{\cdot}1\,w$$

will obtain when $w=\frac{2\{1-(0{\cdot}025)^{\frac{1}{3}}\}}{0{\cdot}025^{\frac{1}{3}}}=4{\cdot}84.$

The general formula for compound imbibition may be written :—

$$\frac{\frac{w}{1+w}}{\frac{w}{1+w}+\left(1-\frac{w}{1+w}\right)^{n}}-L\,w,\ \text{where } L=\frac{K}{C}\ \text{as before.}$$

This expression reduces to

$$w\,(1+w)^{n-1}\{w\,(1+w)^{n-1}+1\}^{-1}-L\,w.$$

Differentiating and equating to zero

$$\{w\,(1+w)^{n-1}+1\}^{-1}\{(1+w)^{n-1}+w\,(n-1)\,(1+w)^{n-2}\}$$
$$-w\,(1+w)^{n-1}\{w\,(1+w)^{n-1}+1\}^{-2}\{(1+w)^{n-1}+w\,(n-1)\,(1+w)^{n-2}\}$$
$$-L=\text{zero}$$

Solving $$L=\frac{(1+w)^{n-1}+w\,(n-1)\,(1+w)^{n-2}}{\{w\,(1+w)^{n-1}+1\}^2}=\frac{(1+w)^{n-2}\,(1+nw)}{\{w\,(1+w)^{n-1}+1\}^2}$$

If desired the roots of this equation may be found by Horner's method, but generally the maximum value of w will be obtained with less labour by trial and error.

Having now obtained the expressions indicating the economic limit, it remains to find some values relating to actual practice.

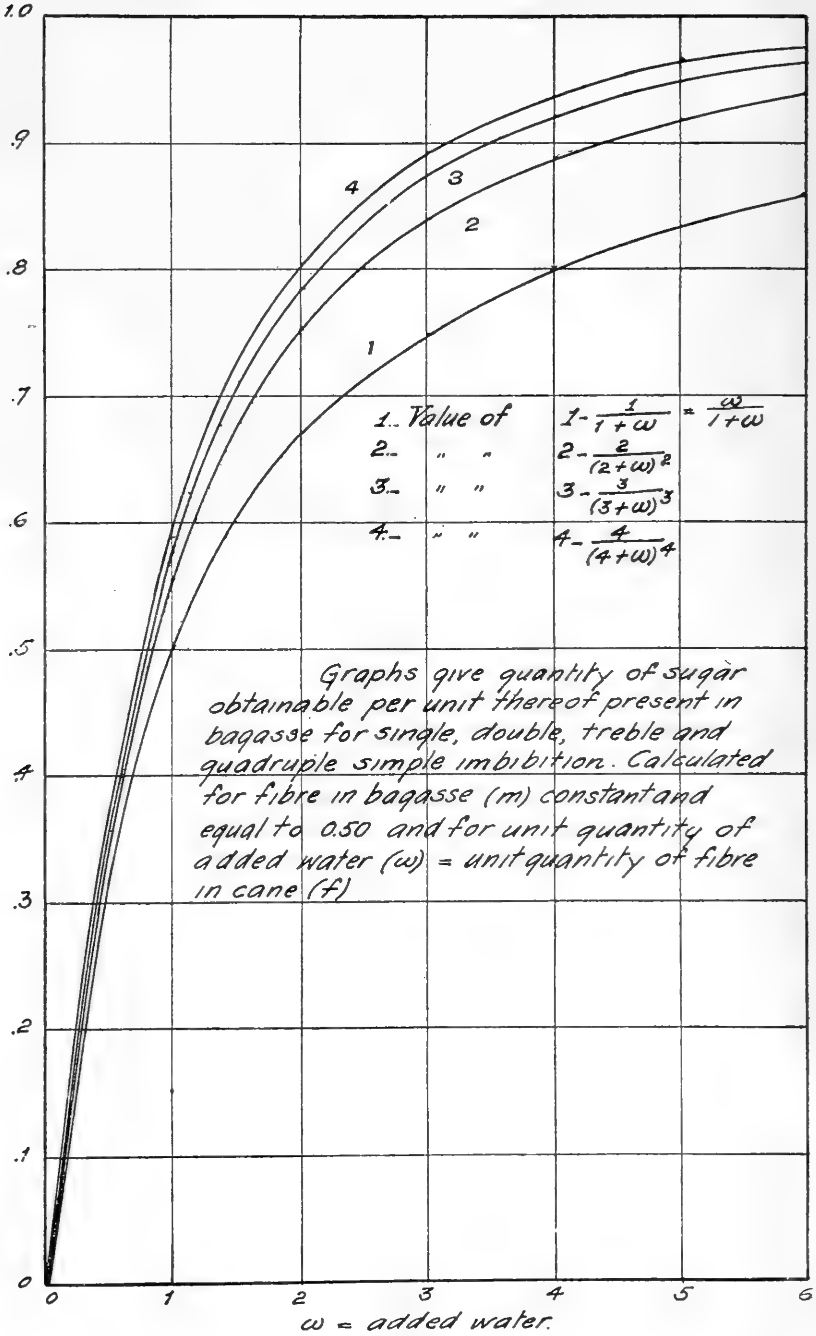

Graphs give quantity of sugar obtainable per unit thereof present in bagasse for single, double, treble and quadruple simple imbibition. Calculated for fibre in bagasse (m) constant and equal to 0.50 and for unit quantity of added water (ω) = unit quantity of fibre in cane (f)

FIG. 143

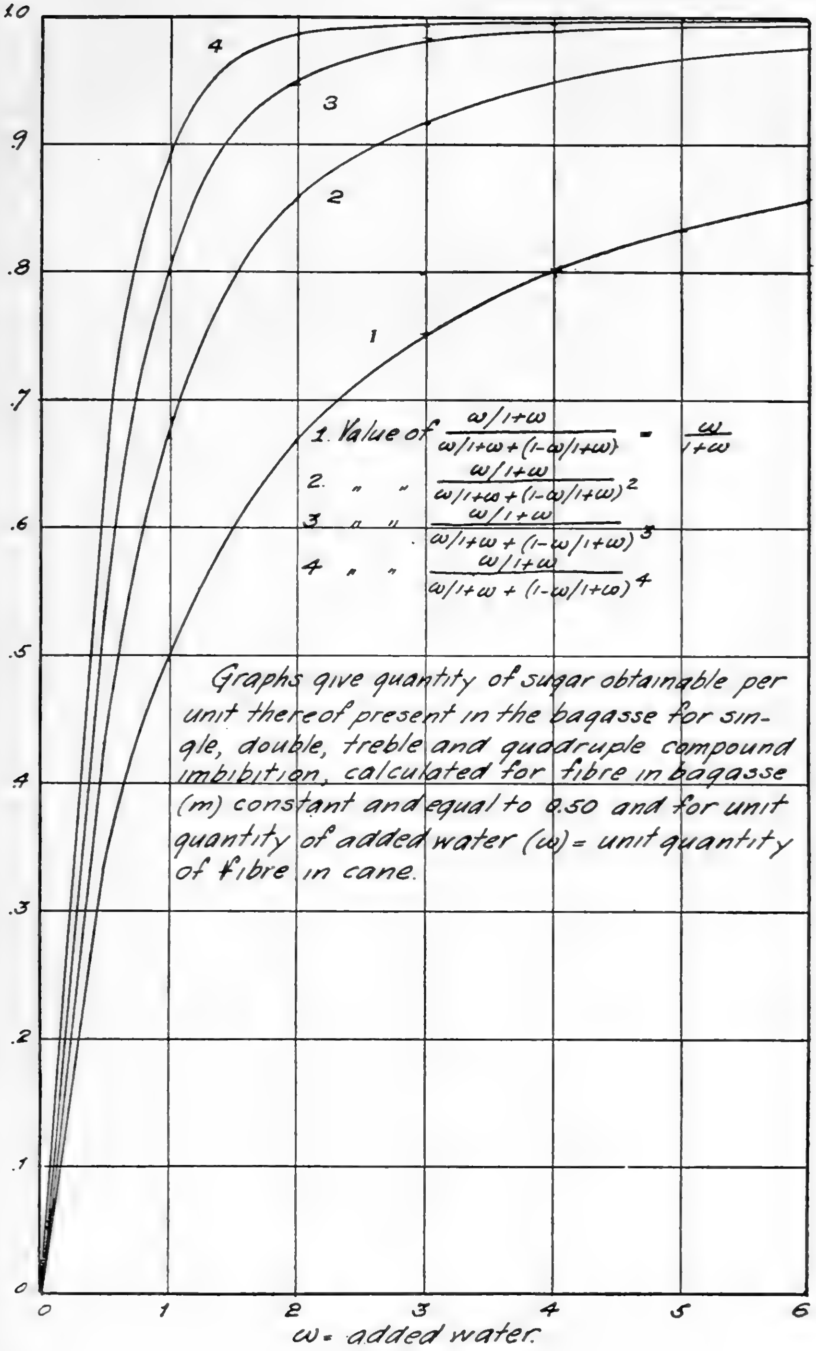

Graphs give quantity of sugar obtainable per unit thereof present in the bagasse for single, double, treble and quadruple compound imbibition, calculated for fibre in bagasse (m) constant and equal to 0.50 and for unit quantity of added water (ω) = unit quantity of fibre in cane.

FIG. 144

Let the juice in the bagasse contain s sugar, of which p is recovered in the subsequent operations. Let the value of the sugar, after deducting all charges for containers, freight, overhead, etc., be v, and let the efficiency of the added water be e. For convenience of writing denote any one of the above expressions by $f\,(w)$. Then the value of the sugar obtained is $s\,p\,v\,e\,f\,(w)$.

The variable expense to be charged against the value of the sugar is the cost of evaporating the water, together with the interest on the prime cost of the larger heating surface required. Both of these may be regarded as a lineal function of w, so that the cost may be expressed as Kw where K is constant.

Now the extreme values of s may be taken as 10 per cent. and 16 per cent., of p as 70 per cent. to 85 per cent., of v as \$30 to \$60 per ton, and e, about which the literature of the cane affords little information, will be taken as 50 per cent.

The lowest value of $s\,p\,v\,e$ will then be $0{\cdot}10 \times 0{\cdot}70 \times 30 \times 0{\cdot}50 =$ \$1·05, and its highest value will be $0{\cdot}16 \times 0{\cdot}85 \times 60 \times 0{\cdot}50 =$ \$4·08.

With quadruple effect evaporation it is permissible to accept an evaportion of 30 lbs. water per lb. of coal. If the coal costs \$10 per ton, the cost of evaporating a ton of water will be 30 cents. On the other hand, some plantations are very favourably situated with regard to local supplies of cheap wood, and are able to evaporate water at a much cheaper rate. The cost of evaporating a ton of water will then be taken as lying between the limits of 10 cents and 30 cents.

In the case of single imbibition, simple or compound, with the lowest values of s, p and v, and with coal at \$10 per ton, as representing unfavourable conditions, the economic extraction curve expressed in cents per ton of cane will be found by plotting values of $1{\cdot}05 \times \frac{w}{1+w} - 0{\cdot}3w$, the maximum point being determined as already indicated.

In *Figs.* 145 and 146 are given twenty-four such graphs. They are calculated for $f\,(w) - 0{\cdot}3\,w$, $2\,f\,(w) - 0{\cdot}2\,w$ and $4\,f\,(w) - 0{\cdot}1\,w$, $f\,(w)$ denoting any one of the expressions representing the effect of the added water. The values selected are intended to represent unfavourable, average and favourable conditions, and are numbered 1, 2, and 3 in this order. In calculating the numerical values to obtain points on the curve the canes have been accepted as having 10 per cent. of fibre and the bagasse as containing 50 per cent. As abscissæ are laid out values $w = 1, 2, 3$, etc., the corresponding values of $n\,f\,(w)$ being plotted as ordinates, and representing the profits as cents per ton of cane.

Referring to the graphs in *Figs.* 143 and 144, the superior action of compound imbibition is very clearly shown, especially in the longer trains, where the curve rises very sharply from the origin. Similarly it will be seen that the subdivision of the water used in schemes of simple imbibition is not attended with any very great benefit, double compound imbibition, for example, showing better results than does the quadruple simple process.

Inspection of the economic curves shows that generally they rise steeply from the origin, and that they do not present a " peaked " but a " flat " maximum, that is to say, there is a region over which the profits due to imbibition are sensibly constant, and it should be over this region that the factory is operated. It is also worth while noticing that with the compound schemes the economic maximum is reached with a less quantity of water than in the single schemes. The position of the maximum is indicated by a dotted ordinate.

In the case selected as unfavourable, the profits are very small, and it is easy to see that there will sometimes be occasions where any extraction beyond that obtained with the dry crushing will be attended with loss. The discussion above has purposely neglected two points, the mathematical treatment of which presents difficulty. In many cases the bagasse alone will of itself afford fuel for a substantial imbibition, in which case the only expense to be charged is the interest on the prime cost of additional heating surface in the evaporators. In a case such as this, the theory given above is applicable, if and when it is possible to determine the point in the process where purchased fuel becomes necessary.

In the second place no account has been taken of the cost of installing the additional mills required in the more complete schemes. This item cannot be expressed as a function of the added water, but will be a constant charge against the process. If such a constant be introduced into the economic equations given above, its differential coefficient will be zero, and the position of the maximum point in the economic curve will not be affected. As has been shown elsewhere in this chapter, the installation of additional mills has a great effect in increasing capacity while maintaining efficiency, and this effect, combined with the superior advantage of long trains on the grounds of the economic use of the water, would still more accentuate the economic position of multiple milling when capacity and efficiency are jointly considered. This last point is only concerned with the economics of the installation of a new factory, or of the extension of an old one. It does not enter into the policy of an executive regarding the operation of the machinery as it actually exists.

Composition of the Cane as affecting the Economic Extraction.—The juice of the cane contains from the engineering standpoint two distinct juices, one in the pith, of high sugar content, and the other in the rind and nodes of low. The pith juice is that first expressed, and it hence follows that there must be a continuous fall in the quality of the juice with the expression of each successive fraction. If, however, all the pith juice has been expressed there will be observed no further fall in quality, since the remaining fractions will consist of rind juice only. As has been shown by Savage[12], such a condition does actually occur in the very high extractions obtained in the Hawaiian Islands, where he found that successive operations on last mill bagasse with an hydraulic press gave a juice of uniform composition. The selective extraction of the pith juice may be traced in the following experiments due to the writer[13] who separated mill bagasse into pith tissue and rind tissue, analysing each separately. The results given below show that the pith tissue, originally the sweeter, finally contains much less sugar than does the rind tissue, and that, while the extraction as regards the pith juice is nearly complete, the rind tissue is very imperfectly treated.

Pith bagasse.	Mill I.	Mill II.	Mill III.	Mill IV.
Weight per 100 bagasse	53·33	48·62	50·00	51·25
Sugar per cent. ...	11·33	7·19	3·78	2·87
Fibre per cent. ...	33·58	41·58	45·63	46·91
Rind bagasse.				
Weight per 100 bagasse	46·67	51·38	50·00	48·75
Sugar per cent. ...	0·12	7·13	4·34	4·06
Fibre per cent. ...	35·15	41·54	44·90	46·67

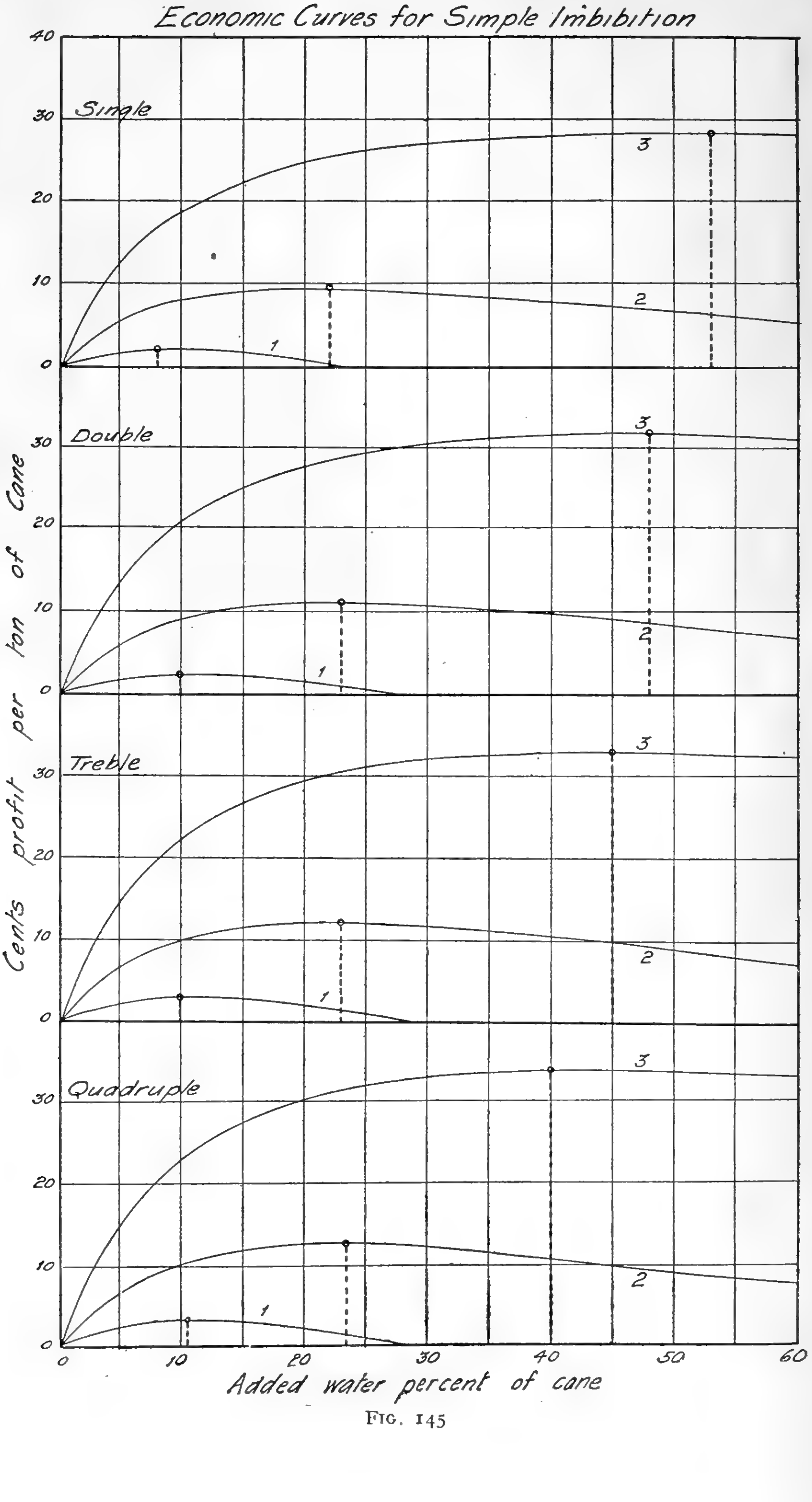
Economic Curves for Simple Imbibition
Single
Double
Treble
Quadruple
1
2
3
0
10
20
30
40
50
60
Cents profit per ton of Cane
Added water percent of cane

FIG. 145

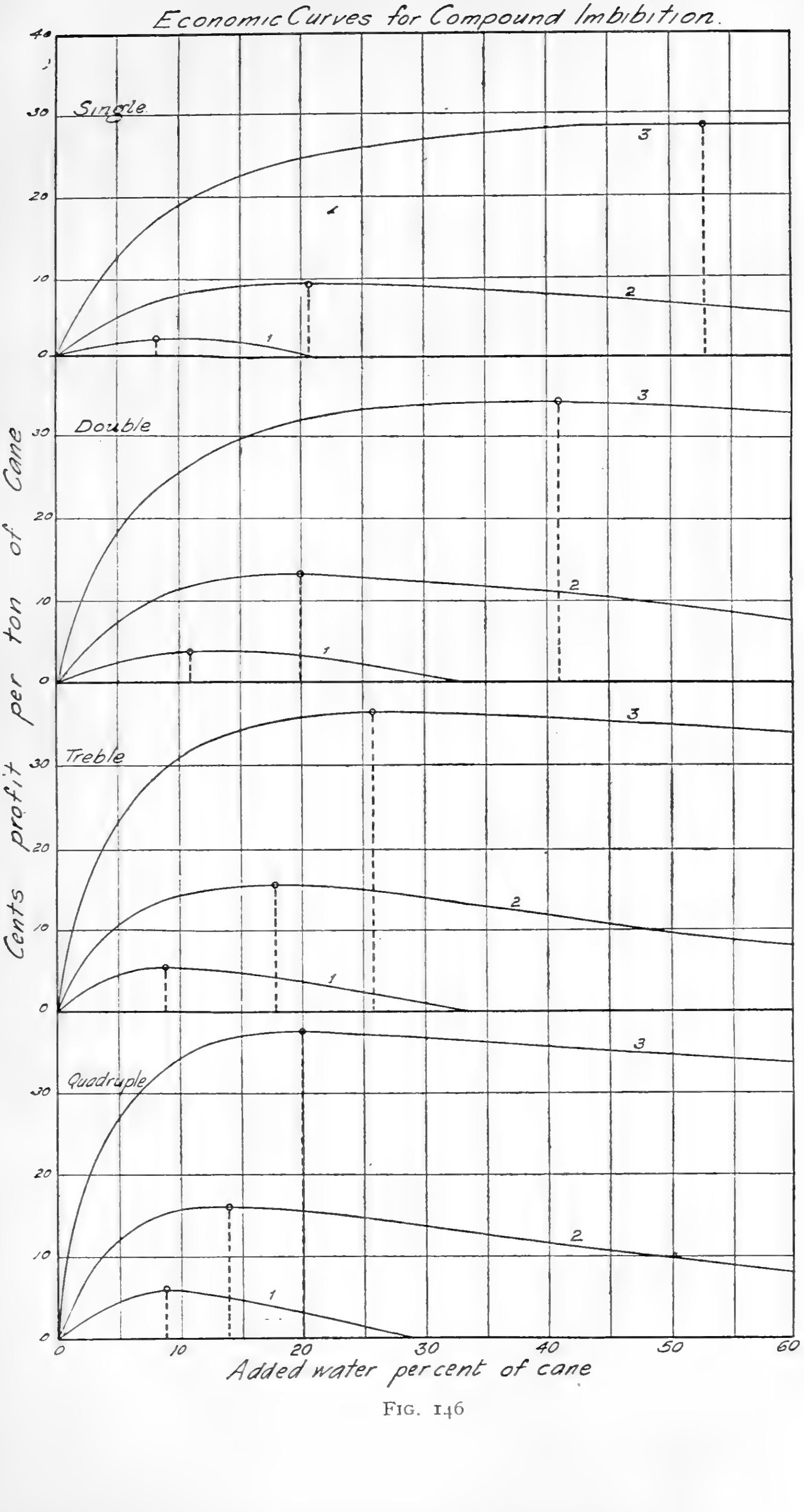
Economic Curves for Compound Imbibition.
Single
Double
Treble
Quadruple
1
2
3
0
10
20
30
40
50
60
Cents profit per ton of Cane
Added water per cent of cane

FIG. 146

Whole bagasse.	Mill I.	Mill II.	Mill III.	Mill IV.
Weight per 100 bagasse	100·00	100·00	100·00	100·00
Sugar per cent. ...	10·34	7·16	4·06	3·51
Fibre per cent. ...	34·32	41·56	45·26	46·87

These results were obtained from material resulting from a crusher and twelve-roller mill, but with more completely disintegrated material affording a homogeneous mass for the mills to treat this distinction vanishes. Such an effect is obtained with appliances like the Searby shredder The observed fall in purity of each successive fraction of juice has been responsible for much inferior work in the past, following on the idea that the material thus obtained might even decrease the total output of sugar. This could only happen if the later extracted juice was specifically "melassigenic," and of this there is not only no evidence, but there is strong evidence to the contrary in that the molasses obtained from the juices of high extraction are substantially of the same purity as those obtained from less efficient work. To illustrate this point, in the table below are given the average results of seven factories which for three years operated at a higher, and for three years at a lower extraction. The purities of the juices are referred to a polarization gravity basis, those of the molasses being absolute.

	Crusher juice purity.	Mixed juice purity.	Defecated juice purity.	Last Mill juice purity.	Molasses purity.	Mixed juice % cane.	Extraction
Low ...	89·5	87·2	88·6	77·9	43·2	101·5	93·7
High ...	89·1	85·9	87·2	72·9	42·8	112·3	97·0

It will be seen that against the 3·3 units rise in extraction is to be placed a loss of 0·9 unit extra fall in purity as between crusher juice and mixed juice, while the rise in purity due to defecation and the purity of the waste molasses is substantially unaltered.

The factories whose results are quoted were, however, fortunate in working with canes of more than average purity, and in cases of less than average purity the decreased purity of the later extracted juice may become a factor of greater importance.

The actual composition of bagasse may be referred to here. Twenty-five years ago material containing 50 per cent. of water was regarded as well crushed. Such bagasse with the limited quantities of water then used could have contained but a little over 40 per cent. of fibre. There are mills now working in the Hawaiian Islands which obtain as a crop average bagasse with distinctly less than 40 per cent. of water, corresponding to nearly 60 per cent. of fibre. Elsewhere figures as high as these are not reported, and 46 to 47 per cent. of water would seem to represent good practice. It is not heavy pressure alone to which these results are due, efficient preparation and subdivision of the cane, combined with the adoption of Messchaert drainage grooves, being also contributing factors. Variety of cane also seems to have an influence, and those varieties classed as hard, and which have a larger proportion of rind tissue, afford a bagasse with more fibre than do the softer canes. This influence is well illustrated in statistics coming from the Hawaiian Islands, where the higher percentages of fibre in bagasse appear at those mills working up the Yellow Caledonia cane, which contains a higher percentage of rind tissue.

The Actual Performances of Milling Plants.—In studying the actual performances of milling plants, besides the extraction there is required to be known the size and number of the mills, the preparatory appliances used, the tonnage of cane, or more exactly of fibre, treated per hour, the quantity of water added and its method of application, and, finally, the composition of the bagasse. As representative of modern practice, there are given below the crop averages for the Hawaiian Islands (1917), Java (1918), Mauritius (1918)—these being the only districts which have yet established a system of mutual control with the annual publication of collated results. Of these figures it may be remarked that the sugar percentage in cane is exceptionally low for Hawaii, and exceptionally high for Java (*cf.* Chapter II.)

There do not seem to be available any but isolated statements regarding the work done in Cuban mills. Though there are some mills in Cuba which reach extractions of 95°–96°, in the majority capacity is of so much more importance than quality of work that over all Cuba the average extraction is probably not more than 90. The writer would estimate the average quantity of added water as about 10 per cent., and of water in bagasse as but little under 50 per cent.

As regards capacity of the mills, from data collected by the writer and obtained from many sources, such as correspondence, the reports of travellers and occasional published statements, it would appear that in Hawaii a crusher and 12 roller 78-in. × 34-in. mill treats up to 8 tons of fibre per hour, a similar 66-in. train treating up to 5 tons. In Cuba a double crusher and 15 or 18-roller train (84 in. × 36 in.) will treat up to 13 tons of fibre per hour. In Java a crusher and 9 roller train (60-in. × 30-in.) treats 4 tons of fibre per hour, and a similar figure is obtained in Mauritius.

	Hawaii, 1917.	Java, 1918.	Mauritius, 1918.
Cane fibre % ...	12·62	13·02	12·17
,, sugar % ...	13·76	13·74	13·32
Mixed juice % cane	116·5	87·9	90·9
Added water % cane	39·4	15·2	16·4
Water % bagasse ...	42·3	47·2	—
Fibre % ,, ...	55·3	47·7	47·7
Sugar %	1·8	4·3	4·2
Extraction ...	97·0	92·1	92·0

The Development and Conduct of Imbibition.—In 1840, Robinson as a communication from unnamed parties in Mauritius, obtained a patent (8731, 1840) for a process of imbibition. He claims the use of hot water sprayed on the bagasse from a perforated pipe in special connection with a six-roller mill, also claimed as novel. At very nearly the same time Daubrée[14] discussed the possibility of increasing the yield by this means, and at Payen's suggestion there was constructed a five-roller mill in which steam enclosed in a hood was allowed to act on the crushed cane. The earliest description of the process in operation is perhaps that due to Wray, and appearing in his "Practical Sugar Planter," 1848. He there describes as working in Province Wellesley, a three-roller mill, followed by a two-roller unit as the imbibition mill. A little later Dureau also records the exceptional use of imbibition in Louisiana.

Dry crushing, however, seems to have remained standard practice. In 1874 Russel used an imbibition process successfully in Demerara, and contemporary records show that the scheme was then considered very advanced practice. His patent (4094 of 1874) includes the use of two mills separated by a long carrier, and the return of dilute juice and the separate defecation of the last mill juice. Other patents of this period are those of Cail (2212 of 1870) which is little more than a duplicate of Robinson's, of Chapman (4411 of 1875) and of Rousselot (5050 of 1876). These last-named inventors preferred two-roller mills as the imbibition unit, and this scheme was largely developed not many years later in the Hawaiian Islands by Alexander Young. To this period also belongs Mallon's U.S. Patent (182377, 1876) for the use of steam applied through a hollow trash bar, a device also to be found in connection with Le Blanc's four-roller mill (patent 5494 of 1883).

Compound imbibition is perhaps first distinctly described in 1884 in connection with the eight-roller mill of Brissoneau and La Haye. It also forms the subject of a patent (U.S. 787101, 1904) granted to Lorenz, but by this time the process was no longer novel.

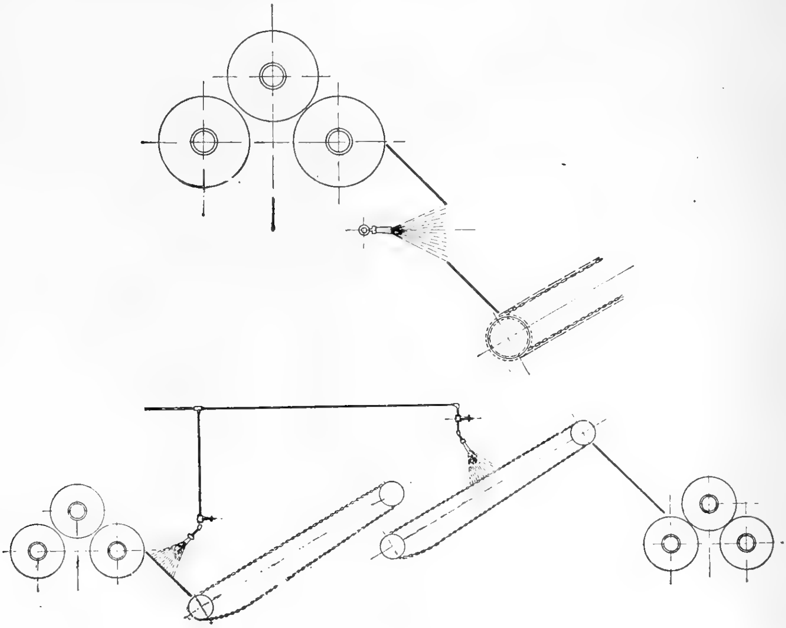

FIG. 147

In employing imbibition schemes, difference of opinion exists as to whether hot or cold water should be used. The natural answer would be that hot water is the more effective agent, but very detailed experiments made by Von Czernicky in Java show that no difference is to be found on tests, and this has been the experience of the writer.

At the present time the standard method of operation comprises the use of a perforated pipe of a saw-cut trough, whence the diluent is delivered to the blanket of bagasse. This process is the same as that patented by Robinson eighty years ago. Some other more detailed schemes which do not seem to have come into extended use are mentioned below.

Injectors.—As a means of obtaining a better distribution of the diluent, injectors arranged in a row parallel to the rollers may be used. Such a scheme is indicated in *Fig.* 147, which also indicates two methods of mechanically obtaining a more effective distribution of the water. These schemes as illustrated are due to Léon Pellet.

Ramsay's Process.—The "macerating scrapers" of Ramsay (patent 18515 of 1911) are indicated in *Fig.* 148. The scrapers bear tangentially on the upper and discharge rollers, and attached to the scrapers are the hollow boxes to which is admitted water under pressure. The system thus defines a passage through which the bagasse travels in close contact with water or other diluent.

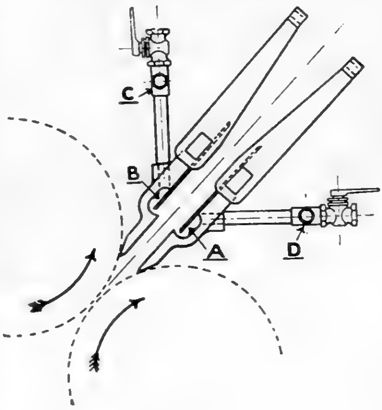

FIG. 148

Deerr's Process.—Patent 126093 of 1918 is shown in *Plate* XXIV. It consists as to the upper portion of a complete perforated rotating cylinder, enclosing a stationary incomplete cylinder. To the interior of the latter, water under pressure is admitted through a hollow shaft, The liquid can only escape through the opening in the stationary cylinder, and those perforations in the outer cylinder that come opposite to the opening as the outer cylinder rotates. The lower system is shown with the relative positions of the two cylinders reversed. Means are also provided to vary the pressure exerted on the layer of bagasse by the upper system, and also the speed of rotation of the cylinders. The object of the device is mainly to bring the diluent under pressure in intimate and distributed contact with the layer of bagasse which is itself under that pressure at which experience has shown the absorption of water to be at a maximum.

Macerating Baths.—Instead of spraying the diluent on the bagasse, a system of "bath maceration" is in use, and to this system the term *maceration* is not altogether inappropriate. In this system the dilute juice expressed from a mill is returned to a tank through which it flows in an opposite direction to the bagasse; the juice overflows at the end of the bath, and the water required is pumped on to the bagasse immediately before it enters the mill. This system is disclosed in Fryer's patent 1073, of 1869, and since that date has formed the subject of a number of other patents with various modifications; the form in which this process is generally applied is indicated in Gibson's patent (24206 of 1895), *Fig.* 149.

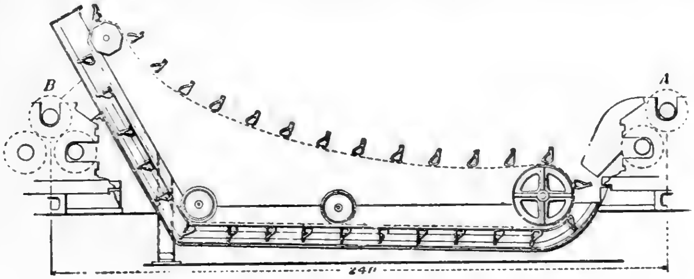

FIG. 149

A variant of this system is seen in Kottmann's patent 17092 of 1884, which employs a rotating watertight drum with counter-current flow of water. McNeil's patent (5431 of 1911) employs maceration with counter-current flow, and recognises in addition that the juice expressed by the top and front rollers is more dilute than that expressed by the top and back; accordingly, the more dilute juice is collected separately and used in the bath, the more concentrated juice going direct to the boiling-house.

Other Methods employing Pressure.—A number of patents have been taken out for the extraction of juice by means of direct pressure; the first of these is that due to Crossley and Stevens (9574 of 1842). This may be the process that proved a failure when tried in St. Vincent about this time. The process of this nature that has attracted most attention is that due to Bessemer (patent 12578, 1849). He employed a reciprocating plunger operated by steam power; the plunger worked in a horizontal cylinder into which the canes were fed vertically, without any previous preparation; the pressure was applied on both strokes of the piston and exerted a continually increasing pressure up to the end of the stroke. This machine was operated experimentally on canes brought from Madeira, but was not successful. Several other direct pressure patents have been taken out—most of them including some means for the preliminary disintegration of the cane, and the simultaneous action of water and of steam. The transmission of power is always hydraulically.

Matthey's patent (21021 of 1889) claims a principle only mentioned in this patent, namely, substitution or displacement extraction. He proposes to press the finely divided cane in vertical cylinders, after which water is introduced into the cylinder, and on to the surface of the crushed material. On again applying pressure, the water is forced through the cane, displacing the residual juice but not mixing with it; this patent is for a process and does not describe the machinery in any but the broadest terms. It was tried without success in the early days of the beet sugar industries.

REFERENCES IN CHAPTER XI.

1. H.S.P.A. Ex. Sta., Agric. Ser., Bull. 30.
2. do. do. ,, ,, Bull. 28.
3. Verslag eener Studiereis naar de Sandwich eilanden.
4. A Brief Account of Francis Willughby, his Journey through Spain. London, 1673.
5. East India Sugar, Papers relating to the Culture of the Sugar Cane, etc. London, 1822.
6. Phil. Trans. Roy. Soc., 1780, 70, 318.
7. Report of the Belgian Commissioners to the Universal Exhibition at Liverpool, 1839.
8. The Sugar Planter's Manual. London, 1842.
9. Manuel du Fabricant du Sucre. Paris, 1833.
10. Java *Arch.*, 1896, 4, 222.
11. U.S. Senatorial Document, No. 50, 1845.
12. Results circulated locally in Hawaii.
13. H.S.P.A. Ex. Sta., Agric. Ser., Bull. 43.
14. La Génie Industrielle, 1852, 2, 357.
15. Java *Arch.*, 1899, 7, 174.

CHAPTER XII

THE DIFFUSION PROCESS

IN the early part of the nineteenth century a German professor, Goettling, proposed to extract the juice of the beetroot by systematic washing, and his scheme was operated at Karlsruhe, by Haber and Schutzenbach. In France the earliest pioneer of this process was Matthieu de Dombasle, whose French patent is 7981 of 1831. The earliest British patent and the first one mentioning the cane is that of Watson (7124, 1836) which describes a one-cell counter-current process. Constable's British patent, communicated to him by Michel, is 10171, 1844, and it describes a process in which the cane is transferred in perforated baskets from cell to cell. This patent correctly describes the mechanism of diffusion through a permeable membrane, and is the one which was unsuccessfully operated in Guadeloupe by Bouscaren about this time. The actual introduction of diffusion as a commercial process is due to Robert, the manager of a beet sugar factory at Seelowitz, in Austria. His British patents are 594 and 3187 of 1866, taken out by Minchin, who operated diffusion successfully at Aska, in India.

From the time of its first successful operation, the diffusion process became rapidly established in the beet sugar industry, and its operation remains now as originally executed. The only developments have been some attempts to put into operation continuous diffusion processes, such as those of Kessler (British patent 15355 of 1902) and of Rak (British patent 16905 of 1901). The latter is in use in a few factories.

In a diffusion process proper, the plant cell is not ruptured, and advantage is taken of the property possessed by crystalloids of passing through a cell wall, or membrane, when water or a solution more dilute than that contained in the cell is in contact with the exterior of the cell wall. In this way the bodies of a colloid nature which do not possess this property are retained within the cell. Independently of diffusion through a cell wall, all solutions in contact tend to become of equal concentration, and the process is physically of the same nature as diffusion, such an action obtaining when the cell wall is ruptured.

This property occurred in the older processes, such as that of Dombasle, to which the term "maceration" was originally applied, and this term or some equivalent such as "lixiviation," should be applied to those processes which deal with comminuted material such as bagasse, since in the absence of a cell wall or other permeable membrane diffusion proper does not obtain.

In the sugar cane industry numerous plants were erected in Spain, Egypt, Louisiana, Mauritius, Brazil, Demerara, Java, Hawaii, and the West Indies. Very few of them now remain, and most of those that were erected met with financial disaster. The causes which led to failure were both technical and economic, and may be briefly summarized :—

1. Faulty design, especially in the earlier plants, and particularly in connection with the cane cutting machinery.

2. Difficulty in maintaining a continuous supply of cane, an essential to the economic conduct of the process. In the beet sugar industry the raw material may be stored over long periods, a proceeding impossible with the cane; and again the more highly developed social organization in beet growing districts, as opposed to the pioneer conditions in cane countries, tends to more regular working.

3. Greater elasticity of the milling process, whereas the diffusion scheme has to be operated at its designed capacity, or else at a loss of sugar or at an extreme dilution. In the case of poor cane in the milling process, all dilution can be stopped, while in diffusion dilution must always obtain.

4. Excessive fuel accounts, due however not so much to inherent faults in the process, but rather to the undeveloped state of steam utilization schemes at the time when the diffusion processes were installed.

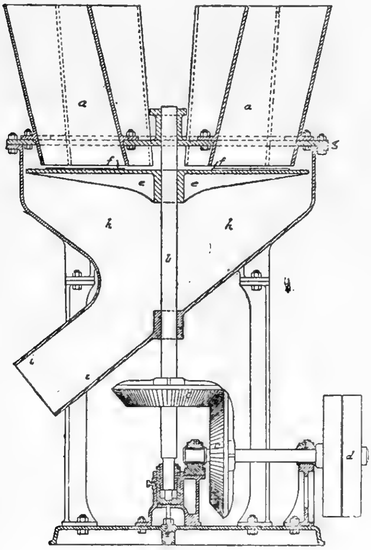

FIG. 150

Diffusion Apparatus.—The apparatus peculiar to a diffusion plant are the vessels in which the diffusion takes place, and the devices used to cut the cane into slices or chips.

Cane Cutter.—A type of cane cutter that has been largely used is shown in vertical section in *Fig.* 150; on a vertical spindle *b*, belt-driven from the pulley *d*, by means of the bevel wheels *c*, is carried a disc *e*. The whole is enclosed in a sheet iron casing *h* and closed by a strong cover *g*; fastened on to the disc *e* are a number of boxes varying from six to twelve, each of which carries a strong sharp knife. The knives are fixed on the disc exactly similar to the cutting edge of a carpenter's plane, and the knife boxes are arranged so that they may readily be removed from the disc and spare knives substituted when one set has become blunted. A plan of the disc with an arrangement of twelve knives is shown in *Fig.* 151. Securely fixed to the cover are one, two or more hoppers *a* into which are fed the canes, which descend on to the disc by their own weight. A high speed is given to the disc, from 100 to 150 revolutions per minute, and the knives cut the cane into chips one-twentieth of an inch or more in thickness, dependent on the setting of the knives. The hoppers are made either vertical or at an angle—the former giving round and the latter oval chips. The chips fall into the receptacle formed by the sides of the apparatus below the disc, and thence pass on to the shoot. The cutter is variably placed above or below the diffusion battery. Cane cutters of this type differ in details. They are sometimes directly driven without the interposition of belt gearing, and are sometimes over instead of under-driven as shown in *Fig.* 150. The shoot *i* is also sometimes dispensed with and its place taken by a scraper actuated by the shaft *b*. In this case the bottom of the receptacle *h* is flat, or nearly so, and the chips are swept out through an opening in the bottom.

To work up 300 tons of cane in 24 hours, a plant of this nature will be about 5 ft. in diameter. The capacity depends on the number of hoppers, and on the setting of the knives, whether to give thick or thin chips. More cane can be cut when thick chips are allowed, but the efficiency of the after-process of diffusion is diminished.

Diffusion Cell.—A section through a cell of a diffusion battery, along with its accompanying juice heater, is shown in *Fig.* 152. It consists of a cylindrical vertical shell, the bottom being made with a slight slope, and the top fitted with a head box; the cell is closed by a door on the top, which is clamped tight by the screw and lever shown at *b*; by slackening the screw the door can be slung on one side, to allow of a charge of chips being introduced. Round the bottom part of the cell is fixed a perforated false bottom, *d*, the object of which is to prevent pieces of cane being carried along the pipe *c*. In some designs the lower door itself carries the false bottom. The joint in the lower door is a hydraulic one, consisting of a hollow rubber tube provided with a pipe by means of which water is conducted to the tube, which is placed in a circular groove contrived either in the door itself or in the bottom of the cell. The water which fills this tube is taken from a tank at a high level, so that in all cases the pressure in the tube is greater than the pressure in the cell. In other cases the rubber tube is connected by a pipe with the main steam; the direct steam becomes condensed in the coil, and pressure is made in the rubber tube by the steam acting on the condensed water.

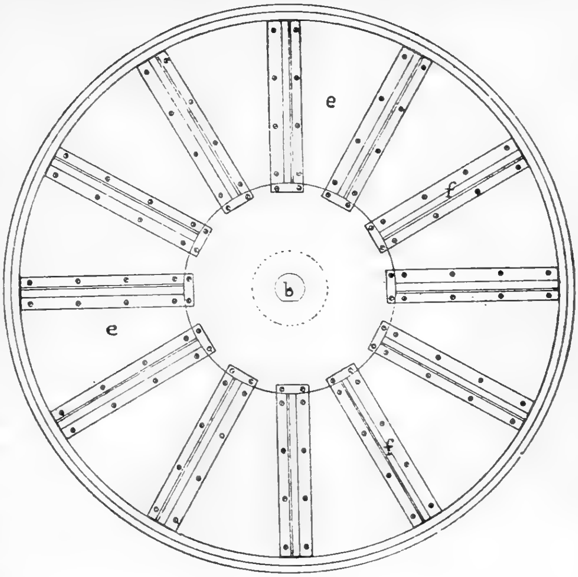

FIG. 151

Attached to each cell is the juice heater *b*; this is of the vertical tube type, exhaust steam being admitted at *o*, and the condensed water drawn off at *h*. Communication between diffuser and juice heater may be made either at top or bottom by the pipes *k* or *c*. The main juice-circulating pipe is shown at *m*, the controlling valves or cocks appearing at *i*. The floor level on which the operator stands is at the line *l*, all valves and cocks being within easy reach; *g* is a small pipe let into the cover of the diffuser to act as an air vent to allow the air to escape when the diffuser is being filled.

Operation of a Diffusion Battery.—A diffusion battery generally consists of from twelve to sixteen vessels, of which two are always out of commission, filling or discharging. In *Fig.* 153 is represented diagrammatically a six-cell battery, of which four cells are effective, one, *f*, being filled, and one, *e*, being ready to be emptied. The cell 1 has been filled with fresh chips. By means of compressed air, water that has been admitted to cell *e* is forced out of that cell, and is transferred to cell 4 and an equal quantity of water or rather dilute juice in cell 4 passed on to cell 3, and so on. The material in cell 2 passes on to cell 1, which contains fresh cane chips which have not yet come into contact with water or dilute juice. Water pressure from an overhead tank is now applied to cell 4, and a similar forward movement obtains, and in this case material is withdrawn from cell 1; the quantity drawn being equal in volume to the water admitted to cell 4. Cell 4 is now treated as cell *e* in the first operation, and in the meantime cell *e* has been filled with fresh cane, and the above-described routine again takes place. By following out this process it is seen that when there are *n* effective cells in operation, fresh cane comes into contact with water or dilute juice $2n-1$ times before it is finally discharged from the battery.

For more detailed information on the operation of diffusion batteries, reference should be made to any standard work on beet sugar manufacture.

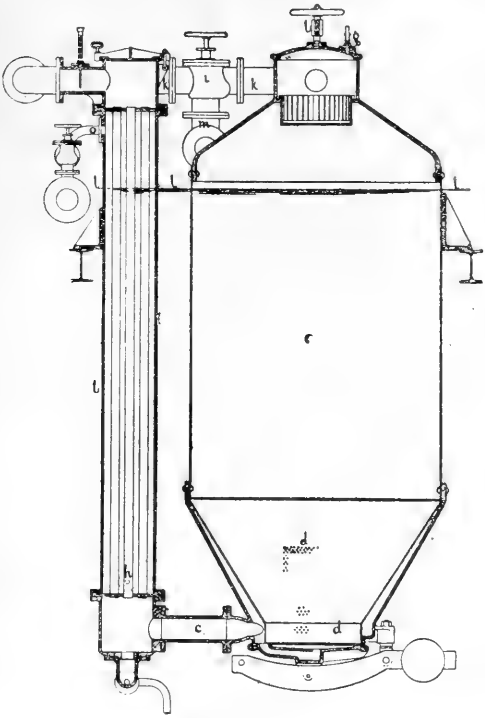

FIG. 152

Extraction in a Diffusion Battery.—The general equation obtained for compound maceration in a milling plant gives also the extraction in a diffusion battery, that is to say, if there are *n* diffusions in a round of the battery where the extraction in each operation is *r*, then the total extraction is $\frac{r}{r-(1-r)^n}$

It is evident from this equation that the extraction increases as both *r* and *n* increase. The value of *r* increases with the completeness of the diffusion whereby a time factor is introduced, and also with the quantity of material passed from cell to cell in each operation. At the same time, however, increasing the "draw" increases the dilution. At the time that diffusion plants were operated, the dilution was about 30 per cent., and the extraction from 95 per cent. and upwards of the sugar in the cane.

Mixed Extraction Processes.—As early as 1850, experiments in the systematic lixiviation of bagasse were made in the French West Indies, and since that time several schemes have been prominent, and, as long ago as 1883, bagasse diffusion was successfully operated at Torre del Mar, in Spain.[2] The most recent attempts in this direction have been that of Kessler, U.K. patent 15355 of 1902, who proposed a U-tube through which the bagasse was intended to travel in a direction opposite to a current of water. The Perichon system of bagasse extraction, U.K. patent 7337 of 1896, was operated in Egypt[3]. It included the systematic lixiviation of the bagasse in trucks with perforated bottoms, combined with the subsequent milling of the exhausted bagasse. That truck immediately before the final re-crushing mill received water which, after passing through the material, was pumped to the next truck in series.

The Naudet system is a combination of milling and diffusion, and is covered by the patents of Naudet and Manoury, 25695 of 1901; Naudet and Hinton, 27666 of 1903; and Naudet, 2928 of 1904. The patents deal with two entirely different features: (1) the combination of milling and diffusion; (2) the method of diffusion. As regards the first, cane is crushed in a mill and the bagasse conveyed to a diffusion cell, whither also goes, after separate heating and liming, the expressed juice which is circulated over its own bagasse. In this cell, dilution with juice which comes from the next cell in series takes place. The addition of water takes place in the last cell in the series, after which the bagasse is milled. In the patent of 1901 it is stated that the dilute juice expressed from the last mill is returned to the battery; and in the patent of 1903 it is implied that this dilute juice is wasted, the extraction being completed in the battery. The raw juice being limed, heated, and filtered over its bagasse, affords a juice which passes direct to the evaporator and eliminates defecators and filter-presses.

The diffusion process refers to the scheme of circulating the juice through a diffuser and heating it externally to the battery. A second part of the process claims raising the density of the drawn-off juice to the original density of the normal juice even by the addition of molasses, but does not claim the suppression of molasses. The Naudet process has not come into general use, though it remains in successful operation in Madeira.

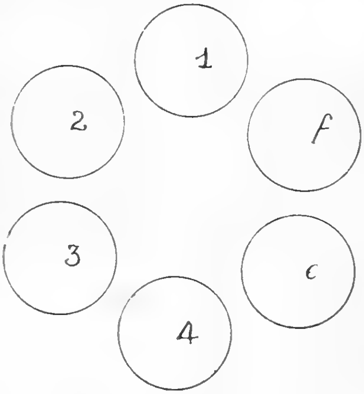

FIG. 153

Geerligs-Hamakers Process.—In 1903, Geerligs and Hamakers demonstrated by large-scale experiments in Java that, by diffusing bagasse from a six-roller mill and crusher, an extraction of 98 per cent. was obtainable, with a dilution of 19·6 per cent. on normal juice. This scheme has not been developed.

Diffusion of Dried Cane.—The resuscitation of an old idea is seen in MacMullen's proposal, patent 18237 of 1908, to shred and dry the cane, afterwards treating it by diffusion, with utilization of the fibre in paper-making. It was understood that this partially manufactured material would enter the United States duty free, and it is only under such advantages that the process could hope to be successful. This scheme is not new; it is included in Crossley's patent 7469 of 1837, and in that taken out by Newton for a foreigner 12033 of 1848. Such a process was operated by Daubrée in

Martinique, prior to 1850, but the material, on arrival in Paris, was found to have fermented.

REFERENCES IN CHAPTER XII.

1. *Bulletin de Pharmacie*, 1911, 3, 371.
2. U.S. Dept. of Agric., Div. of Chem., Bull. 8.
3. *S.C.*, 1898, 30, 491.
4. *Int. Sug. Jour.*, 1903, 5.

CHAPTER XIII

THE ACTION OF HEAT, ALKALIES AND ACIDS ON SUGARS AND CANE JUICES

IN the process of sugar manufacture the cane juice is subjected to the influence of an elevated temperature, and to the action of lime. In some processes sulphurous and phosphoric acids are also employed. The action of these agents, together with some other connected points, is discussed in this chapter.

Cane juice, as it leaves the mill, consists of a turbid solution of cane sugar, reducing sugars, bodies of unknown constitution known as " gums," salts of both organic and inorganic acids, mainly potash salts, colouring matters, albuminoids, matter in a colloid condition, suspended particles of fibre and dirt, and a variety of other bodies.

The Colloids of Cane Juice.—When all the grosser particles of suspended matter in a cane juice have been removed by straining through glass wool, there remains a turbid liquid, the turbidity of which is due to matter in the colloid state. The following observations were made by the writer[1]. The colloids may be separated in the cold by filtration through asbestos. The filtration is very slow and only 5 c.c. of juice can be filtered through an area of 1 sq. cm. before the asbestos mat is clogged. The filtrate obtained is quite bright, and on heating never gives more than a trace of precipitate, indicating that filtration removes the same bodies as are coagulated by heat. The quantity of colloids thus separated by filtration amounts to from 0·15 to 0·25 gram per 100 c.c. of juice. After coagulation by heat, the colloids do not revert to the colloid condition on cooling, but after coagulation by alkalies the colloid state again appears on neutralization. The colloids are not precipitated by electrolytes except by calcium chloride in very large quantity, and are hence to be classed as lyophilic. On passing a current of 8 amperes under a head of 10 volts through cane juice contained in a U-tube, there is a distinct migration of the colloids towards the anode, the juice becoming clarified near the cathode. The colloids are hence negatively charged.

An observation well known in sugar-houses is the great increase in the rapidity of filtration that takes place after the juices have become alkaline. One of the major constituents of the defecation precipitate is " cane wax," which, in turn, contains a large proportion of fatty acids. The action of lime on these bodies will result in the formation of a soap, and Kraffts[2] has shown that in neutral solution such bodies behave as colloids, becoming crystalloids in alkaline solution. Herein probably lies one, at least, of the causes of this phenomenon.

The Colouring Matter of Cane Juice.—The principal colouring matters in cane juices are chlorophyll, anthocyan, saccharetin, and bodies of a polyphenol nature (tannins), all of which occur naturally. Formed in the process of manufacture are caramel and lime-glucose decomposition products. Chlorophyll is the substance to which the green colour of plants is due; whatever quantity of this passes into the juice is removed in the press cake. Anthocyan is the term applied to the red and purple colouring matter to which the colour of some canes is due. Actually the term means nothing more than colouring matter. It is dark green in alkaline solution, and is precipitated by an excess of lime. Saccharetin is the term applied by Steuerwald[3] to an "incrusting" material obtained by cold alkaline digestion of bagasse. This body is probably a waste product of the plant metabolism and is found deposited on the fibre. It is an aromatic carbon compound, giving pyrogallol on dry distillation and catechol on fusion with potash. On heating with hydrochloric acid, vanillin is given off. This substance is colourless in acid, and deep yellow in alkaline solution, and is connected by Steuerwald with causing the dark colour of cane products in combination with iron salts.

The incrusting material of lignified plant tissues have been identified by Tiemann and Harman with coniferin, but Czapek[4] regards it as an aldehyde, closely related to coniferylic alcohol, to which he has given the name hadromal.

Tannins were first observed in the cane by Szymanski[5] and were afterwards studied by Went[6], by Browne[7], and more recently by Schneller[8] and by Zerban[9]. These bodies are located mainly in the actively vegetative portions of the cane, especially the tops and the eyes. Schneller regards the incrusting material or saccharetin of Steuerwald as derived from these tannins or polyphenols, and deposited as waste matter on the parenchyma. These bodies have the property of forming, with ferric salts, dark-coloured bodies, which are nothing but inks, and to these inks the dark colour of cane juices, as well as the greyish tint often seen in white sugars, may be attributed. This coloration is, however, also connected with the action of oxidizing enzymes occurring in the juice, the presence of which is first shown by Raciborski[10], and the action of which has been further studied by Zerban[9]. He shows that cane juices expressed in the absence of contact with iron are originally nearly colourless passing to brown, due mainly to the action of a laccase on the polyphenols, and also, but to a much smaller degree, of a tyrosinase on the tyrosin of the cane. In the presence of a ferrous salt, these oxidizing ferments rapidly convert the ferrous salt to the ferric state with the formation of a dark green colour. In juices where the enzyme has been destroyed by boiling or by precipitation with alcohol, the addition of a ferrous salt does not produce the dark green colour at once, but only after exposure to the air.

In addition to the naturally occurring colouring matters, others are formed by the action of lime on the reducing sugars. Schneller thinks these decomposition bodies are allied to the polyphenols, and they also form dark-coloured ferric salts. A second artificially formed colour is caramel formed at the expense of the cane sugar, and due to the action of heat. Of its chemistry and composition little is known, and it is probably a mixture of bodies.

Acidity and Alkalinity.—Under the generally accepted theory, acidity and the presence of free hydrogen ions are synonymous terms, and an acid is a body which, on solution in water, splits up into free hydrogen ions, carrying a positive charge of electricity and into ions carrying a negative charge. Thus hydrochloric acid represented by the formula HCl on solution in water consists of H+ and Cl— together with undissociated HCl.

The strength of an acid is believed under this conception to be due to the degree of dissociation or to the number of free hydrogen ions present. Conversely, an alkali is a body which splits up into hydroxyl ions, OH—, and into a base, caustic soda in solution being under this conception believed to consist of sodium ions, Na+ and hydroxyl ions, OH—, together with undissociated NaOH.

The routine analytical process for the determination of acidity depends on the use of indicators, or of bodies which change their colour, depending on whether free hydrogen or free hydroxyl ions are present. Such a body very widely used in analysis is phenolphthalein which is colourless in acid and deep crimson in alkaline solution.

A normal solution of an acid is one that contains in 1,000 c.c. the hydrogen equivalent of the acid expressed in grams. Thus a normal solution of hydrochloric acid of the formula HCl contains in 1,000 c.c. 36·5 grams of acid; a normal solution of sulphuric acid, H_2SO_4, contains 49 grams of sulphuric acid, and a normal solution of caustic soda, NaOH, contains 40 grams of caustic soda; and equal quantities of normal solutions of acids and of alkalies will exactly neutralize each other. This statement does not imply that the strength of all acids and alkalies is the same, for, as an acid is gradually neutralized by an alkali, dissociation of the undissociated portion continually takes place until all is dissociated and the end point must in every case be the same.* If, then, a material is said to have an acidity of 3 c.c. normal acid per 100 c.c., all that is meant is that 3 c.c. of normal alkali are required to induce the colour change in the presence of some suitable indicator. In the case of different acids, the number of free hydrogen ions present originally before the addition of alkali and the effects due to acidity are very different, although the test shows the same acidity in the different cases.

Determination of Acidity and Alkalinity.—Where the expression "an acidity of 3 c.c. normal" occurs in this chapter it is to be understood that 100 c.c. of the material required the addition of 3 c.c. of normal alkali solution to induce the colour change with the selected indicator. Alkalinity is expressed in a similar way. Elsewhere in the sugar industry it is often usual to express acidity in terms of milligrams of lime per 1,000 c.c. of juice, and an alkalinity of 280 milligrams of lime per 1,000 c.c. is the same as 1 c.c. normal alkalinity per 100 c.c. Similarly, an acidity of 410 milligrams of sulphurous acid per 1,000 c.c. is the same as 1 c.c. normal acidity per 100 c.c.

In the determination of acidity and of alkalinity, the end point is the term used to denote the colour change of the indicator when the point of exact neutrality is just passed. All indicators do not show the same end point, and it is also affected by the presence of neutral salts. For technical control in the sugar industry this difference has some importance, as is explained later.

The indicators most commonly used in the sugar industry are litmus and phenolphthalein. The analytical routine followed by the writer is as follows:—White filter paper is soaked in a neutral solution of phenolphthalein

---

* Except in so far as regards some finer points which do not affect the technical correctness of this statement.

in 50 per cent. alcohol, allowed to dry and cut into strips. One end of a strip is cut off, leaving a ragged edge; 100 c.c. or other convenient quantity of the juice is placed in a suitable vessel to which (if acid) decinormal alkali is allowed to flow from a burette. As the end point is approached, the ragged edge of the paper is dipped into the juice, and, after immersion, is examined by transmitted light; the end point or exact neutrality is taken as being when a delicate orange-red colour can be detected on the transparent torn edge of the paper. Determinations sensitive to 0.1 c.c. decinormal acid or alkali can be made by this method, and, when a juice is said to have an acidity of 3 c.c. normal acid, nothing more than the result of the execution of this or a similar test is intended.

If litmus be used as an indicator, results different from those found with phenolphthalein obtain, the acidity being less and the alkalinity being greater. That is to say, on titrating an acid juice with alkali, the end point appears with litmus before it is seen with phenolphthalein. This difference is of especial importance in the control of sulphitation. Normal sulphites of the formula M_2SO_3 are alkaline towards litmus and neutral towards phenolphthalein; accordingly, if a juice containing free sulphurous acid be gradually neutralized with an alkali, a neutral reaction will be given to litmus when both normal sulphite and acid sulphite are present. The complete neutralization and disappearance of acid sulphite and presence of free alkali is shown by the appearance of a red colour with phenolphthalein; when this body is colourless, free acid or acid sulphite may equally be present.

The natural colouring matters of cane juice also to some extent serve as indicators, three colour phases being observed. At the point where phenolphthalein becomes pink, cane juice changes to a golden yellow; with the addition of acid the colour changes to an olive brown, which persists over 0·5 c.c. of normal acid per 100 c.c. of juice, counting from the appearance of the golden yellow colour; the addition of more acid gives an almost colourless juice; the change from olive brown to colourless takes place very nearly at the point where litmus becomes distinctly red. These changes are probably due to the presence of several colouring matters in juice.

The relative advantages of litmus and of phenolphthalein in technical sugar-house control have at times led to controversy. Without doubt litmus papers are superior for routine inspection and for supervision, and generally in defecation processes juices which afford a barely perceptible bluish tint settle well; when tested with phenolphthalein papers such juices give no change of colour, and hence afford no indication of a critical point as is given by litmus. For the definite expression of analytical results, however, the end point as afforded by phenolphthalein is much sharper and more distinct. In the carbonation process, moreover, the appearance of a very faint pink with phenolphthalein forms one of the critical points.

The Action of Acids on Cane Sugar.—Cane sugar in acid solution is converted into equal parts of glucose and of fructose. This process is vulgarly called inversion, and is actually an hydrolysis, the acid acting as a catalyst. Symbolically, the process follows the equation:—

$$C_{12}H_{22}O_{11} + H_2O = C_6H_{12}O_6 + C_6H_{12}O_6$$

The rate of inversion is dependent on the concentration of the hydrogen ions, or on the strength of the acid used, and actually the study of the hydrolysis of cane sugar is one of the classic methods by which the strengths of acids were determined. The principal experimental observations connected with the inversion of cane sugar are given below :—

1. *Rate of Inversion.*—When all other conditions are unchanged, the rate of inversion is proportional to the active mass, *i.e.*, when the temperature and the concentration of the acid are unchanged, a 20 per cent. solution of cane sugar inverts twice as fast as a 10 per cent. solution. Developed mathematically, this statement becomes reduced to the following form :—

In a sugar solution let there be a parts of sugar present ; in a small interval of time, t, let x parts be inverted. There are then present $a—x$ parts of cane sugar. Since the rate of change is proportional to the active mass,

$$\frac{d\,x}{d\,t} = k\,(a—x) \text{ where } k \text{ is a constant.}$$

Whence, by integration, $$\log \frac{a}{a-x} = k\,t$$

or $$\frac{1}{t} \log \frac{a}{a-x} = k$$

The constant k gives a means of comparing the strength of different acids, or, under the ionic hypothesis, the degree of dissociation. This law was found experimentally by Wilhelmy[11] in 1850, and developed on *a priori* reasoning by Guldberg and Waage [12] in 1867. It forms a typical instance of the universal law that rate of chemical change is proportional to the active mass.

As definitely applied to a sugar solution in acid medium, let the total change in polarization due to inversion be a ; then a is proportional to the amount of sugar originally present. Let the fall in polarization, *i.e.*, the algebraical difference between the initial reading and the reading after any time interval, t, be x ; then x is proportional to the amount of sugar inverted. The calculation of the constant will then appear as in the following example.

Initial reading, 40° ; reading after complete inversion, — 12° ; total change $= a = 52°$; reading after 60 minutes, 30° ; proportionate amount of sugar inverted $= x = 40—30=10$. Then

$$\text{Constant} = \frac{1}{60} \log \frac{52}{52-10} = 0\cdot001546.$$

2. *Influence of Acid.*—The constant k was determined by Ostwald[13] in 1884 for a large number of acids ; some values as found by him are given below. These are referred to half normal strength, to 25° C. temperature, the time being expressed in minutes, and the logarithms being common ones.

Acid.	Constant.	Acid.	Constant.
Hydrobromic ...	0·002187	Sulphurous	0·0006630
Hydrochloric ...	0·002438	Oxalic	0·0004000
Nitric	0·002187	Phosphoric	0·0001357
Sulphuric ...	0·001172	Acetic	0·0000088

3. *Effect of Concentration of Acid.*—Within comparatively narrow limits the rate of inversion is nearly directly proportional to the concentration of the acid. With the stronger acids, however, the rate of inversion decreases more rapidly than does the decrease in concentration ; with weaker acids, the reverse holds.

4. *Effect of Temperature.*—The following empirical equation, due to Urech[14], connects velocity of inversion and temperature:—

$$C_1 = C_0\, e^{\frac{A(T_1 - T_0)}{T_0 T_1}}$$

where C_0 and C_1 are the rates of inversion at T_0 and T_1, e is the base of the natural system of logarithms, and A is a constant, and equal to 12820. Putting the rate of inversion at 25° $C.=1$, this expression gives the following rates of inversion at the stated temperatures:—

°C.	Rate.	°C.	Rate.	°C.	Rate.
25	1	60	91·8	85	1354
40	7·6	65	162	90	2110
45	14·3	70	282	95	3573
50	26·7	75	483	100	5659
55	57·7	80	814		

The Effect of Neutral Salts.—It was originally shown by Arrhenius[15] that the rate of inversion by acids was accelerated by the presence of the halides and nitrates of the alkalies and alkaline earths. The writer[16] has extended his observations, and has found:—

1. In concentration up to 0·02 N at 100° C., the halides and nitrates have an inappreciable effect on the rate of inversion with very dilute acids.
2. Under similar conditions the sulphates, sulphites, oxalates, and all alkali and alkaline earth salts of weaker acids retard inversion.
3. In concentration of acid and salt of the normal order, at ordinary temperatures, the halides and nitrates of the alkalies and alkaline earths accelerate the rate of inversion; the acceleration increases progressively from chloride to bromide, to iodide, the effect of nitrates being similar to that of chlorides. A difference in the base of the salt has very little, if any, effect; thus, the acceleration due to the sodium chloride is substantially the same as that due to calcium chloride.
4. Under similar conditions, sulphates, sulphites, oxalates, etc., retard the rate of inversion.

Effect of Invert Sugar.—The action of invert sugar on the inversion of cane sugar is a peculiar subject, some investigators finding that invert sugar of itself caused inversion, and others observing no effect. Geerligs[17], in investigating the subject, came to the conclusion that invert sugar of itself had no invertive action, but that in the presence of neutral salts, such as chlorides, nitrates and sulphates of the alkalies and alkaline earths, inversion occurred at the temperature of boiling water, owing to a slight hydrolysis of the neutral salt under the influence of the invert sugar. The writer[16] in investigating the same subject, failed to obtain any trace of inversion due to the combined influence of invert sugar and neutral salts, when the latter were present in normal concentration.

Inversion under Acid Salts.—Salts of the heavy metals, such as zinc sulphate, also cause the inversion of cane sugar. This has been chiefly studied by Long[18]; the inversion is ascribed to the partial hydrolysis of the salt, thereby affording free hydrogen ions in solution.

Inversion under the Influence of Enzymes.—Besides chemical inversion under the influence of acids and acid salts, cane sugar is inverted by the action of certain ferments known collectively as enzymes. The enzyme most studied is that secreted by yeast, and known as invertase. The properties of this body were first investigated by O'Sullivan and Thompson[19], who found that the most favourable concentration of the sugar solution was 20 per cent., that the *optimum temperature* was 55° C. to 60° C., the enzyme being slowly destroyed at 65° C., and instantaneously at 75° C. The action of invertase is greatly accelerated by minute traces of acids. O'Sullivan and Thompson found that the law of mass action held for the action of invertase, a result not obtained by subsequent workers until C. S. Hudson[20] showed that these had neglected to take into account the mutarotation of the invert sugar formed.

Other instances of enzyme inversion that are of interest are the deterioration of cut cane by an invertase which, as shown by Browne,[7] is located chiefly in the upper portion of the stalk, and which diffuses into the lower portions of cut cane. The deterioration of stored sugars may also be properly ascribed to enzymes secreted by bacteria, moulds and yeasts. In another field Lewton Brain[21] showed that the fungus causing red rot of the stem (*Colletotrichum falcatum*) also secreted an invertase causing the inversion of cane sugar.

The processes of inversion due to enzymes obey the same laws as under acid inversion. In other similar biological changes this has been established by Arrhenius[22] and his pupils. Here, too, temperature is a factor of importance. The more rapid deterioration of cut cane in hot weather is well known, and Browne[23] also has called attention to an increase in the deterioration of stored sugar in hot weather, and its almost complete cessation at 20° C.

The Inversion of Sugar in Cane Juices.—The system in cane sugar manufacture when acid juices are boiled consists of sugar, neutral salts of weak acids principally with a lime or potash base, and a certain amount of free acid generally either sulphurous or phosphoric. The amount of free acid present as indicated by analysis in a system consisting of sugar, water and acid only would at a temperature of 100° C. very rapidly invert all the cane sugar present. Owing, however, to the inhibitory effect of the neutral salts of weak acids, or, in the language of the ionic hypothesis, to the reduction in the number of hydrogen ions, very acid juices can be worked, provided the acidity is due to a weak acid, such as sulphurous or phosphoric.

The actual acidity allowable will depend on the quantity of neutral salts, and this in turn will depend on the ash of the juice and on certain details followed in the course of manufacture.

If a juice is heavily limed, and the excess of lime be then neutralized with sulphurous acid a neutral sulphite will be present in the juice, and its presence will permit of a high acidity without inversion; or again, as in the carbonation process, in which some or all of the reducing sugars are converted into organic acids by an excess of lime, salts of weak acids are formed, which act in a similar way. This property has been used by several generations of Demerara and Mauritius sugar boilers in the manufacture of yellow and white consumption sugars. In the former district an acidity up to 2 c.c. normal acid per 100 c.c. is quite usual. As indicative of actual limits possible, the following experiments designed to simulate manufacturing conditions were made by the writer:—In the making of white and yellow sugars, the use of 5 lbs. of sulphur per 1,000 gallons of juice is excessive. This quantity corresponds to the presence of 0·03 normal sulphite salt in the juice. A juice was treated with lime until just alkaline to phenolphthalein, and sodium sulphite added in quantity to correspond with the presence of 0·01, 0·02 and 0·03 normal sulphite salt per 100 c.c. of juice. Phosphoric acid was then placed in the samples and the acidity determined by the routine methods of analysis. The prepared juices were then heated at a temperature of 97°–98° C for 30 minutes and examined, to determine when inversion occurred. With concentrations of sodium sulphite 0·01, 0·02 and 0·03, normal inversion was detected when the concentration of the phosphoric acid was 2·4, 4·2 and 6·8 normal per 100 c.c. of juice respectively. This experiment indicates that under the usual processes there is a very considerable margin of safety in boiling acid juices before any loss due to inversion occurs.

The Effect of Higher Temperatures on Cane Sugar.—Cane sugar at temperatures as low as 40° C. suffers some change and caramelization, as has been shown by Bates and Jackson[24] in their studies on the preparation of a pure sugar for a polariscopic standard. The destruction is, however, very small, and has no bearing on manufacturing losses.

The original investigation on the effect of high temperatures was made by Pellet[25], and the results most often quoted are those of Herzfeld[26], and the subject has been studied later by Hazewinkel[27], Douschsky[28], Zujew[29] Pokorny[30] ,Deerr[31] and others, mainly in connection with the extended application of the pre-evaporator. Some of Herzfeld's results in which sugar solutions with an alkalinity of 0·01 to 0·05 per cent. were heated in metal containers are given below, the figures referring to the sugar destroyed in one hour as a percentage on the sugar originally present. The solutions were made alkaline to inhibit the secondary action of the acids formed from the sugar, which would be much greater than that due to heat alone.

Percentage of Sugar in solution.

Temp. C°	10	15	20	25	30
80	0·0444	0·0373	0·0301	0·0229	0·0157
90	0·0790	0·0667	0·0541	0·0418	0·0290
100	0·1140	0·0961	0·0781	0·0602	0·0523
110	0·1630	0·1362	0·1083	0·0825	0·0557
120	0·2823	0·2582	0·2341	0·2098	0·1857
130	2·0553	1·7582	1·4610	1·1638	0·8667

Evidently between 120° C and 130° C the rate of destruction increases very rapidly.

It is to be noted that these results were obtained in the presence of small quantities of alkalies. The products of the decomposition of sugar are acid, and hence on continued heating two factors are at work, the continued breakdown of the sugar molecule and the inversion of the sugar by the acid formed. This last factor becomes active only when the free alkali has been neutralized and even then the salt formed continues to exert its inhibitory action, as explained in a previous section.

In experiments made by the writer it was found that the nitrates, halides, and sulphates of the alkalies and alkaline earths accelerated the rate of destruction of sugar at higher temperatures, salts of weaker acids retarding the rate.

In cane juices, as explained in a previous section, the quantity of neutral salts and acids is variable. To determine what should be the safe acidity at which juices could be heated in a pre-evaporator, the writer made the following experiment :—Defecated cane juice of an acidity 0·5 normal was reduced to the acidities shown in the annexed table by the addition of either caustic soda or of oxalic acid. Oxalic acid was selected for use, as a precipitate of calcium oxalate would form and the system as regards the introduction of neutral salts would be unaffected. The prepared juices were then heated in an autoclave for thirty minutes at a temperature of 115° C corresponding to a pressure of 10 lbs. per square inch. The results were as below :—

Acidity,	Polarization gravity purity.	Gravity purity.
Original	83·51	84·78
0	83·70	85·02
0·2	83·81	85·06
0·4	83·82	85·27
0·6	83·61	84·93
0·8	83·46	84·91
1·0	83·00	84·66
1·2	82·53	
1·4	82·08	
1·6	80·16	
1·8	79·71	
2·0	77·10	

The Action of Alkalies on Reducing Sugars.—If a solution of reducing sugars, whether all dextrose or all levulose, or a mixture of these in any proportion, be left for a sufficiently long time in contact with even very dilute alkali, a material is eventually obtained which is almost optically inactive. At higher temperatures the change takes place very rapidly. On analysis it will be found that the reducing power has also slightly decreased. This behaviour, which was first observed by Dubrunfaut[32], has been explained by Lobry de Bruyn and Van Ekenstein[33], who have shown that it is due to an isomeric change, the final position of equilibrium being obtained with a mixture of glucose, fructose, mannose and glutose. Glutose which has not been obtained in a crystalline state is said to have only half the reducing power of the other sugars, and to its presence is due the major part of the reduction in reducing power. It is to be observed that with dilute alkali there is no actual destruction of sugar, but only an isomeric change.

In cane juices the combination of reducing sugars present nearly always is levo-rotatory. In the process of manufacture part of this levo-rotation is destroyed so that the net dextro-rotation of the juice increases, and a fictitious and unreal rise in purity may often be observed under conditions where no purification is possible, and this change in rotation is accompanied by a fall in the reducing power pointing to a loss of " glucose." The extent of this rise in purity will depend on the alkalinity of the juice, the temperature, and the duration of exposure. It may easily reach one unit, and can be observed between defecated juice and syrup, under conditions where the only material removed is water. The following observations were made by the writer[34] on juice with an acidity of about 0·5 c.c. normal per 100 c.c., referred to phenolphthalein as indicator. The juice was exposed in a pre-evaporator to a temperature of 110°–112° C. for from 10 to 12 minutes. Each determination was made on a sample collected at intervals of 5 minutes over a period of half an hour.

	Polarization gravity purity before heating.	Polarization gravity purity after heating.
	85·22	85·86
	84·97	85·99
	84·44	85·33
	85·41	85·82
	85·12	85·22
	83·45	84·53
	83·22	83·61
	84·57	85·19
Mean	**84·55**	**85·22**

In the presence of larger quantities of alkalies, the reducing sugars are actually destroyed. The products of decomposition are dependent on the temperature. At temperatures below 60° C. the chief products are saccharic and lactic acids, with only small quantities of glucinic acid. Above this temperature glucinic acid is formed in large quantity. This body forms a basic glucinate with lime, which is insoluble in alkaline solution and is of a dark brown colour. At temperatures near the boiling point, the whole of the reducing sugars are rapidly destroyed as well as these dark-coloured bodies, but the action has not been completely examined.

Action of Lime on Cane Juice.—If lime either in a thin suspension or as saccharate be added to a cane juice, the first effect is the neutralization of any free acid present. The continued addition causes the appearance of a precipitate consisting in part of those bodies referred to in a previous chapter as colloids. There is also precipitated the phosphoric acid which is always present and some small quantity of aluminium and ferric oxides. In the precipitate is contained most of the nitrogen that is present in the albuminoid form, the chlorophyll, cane wax and some of the colouring matter. The actual weight of the precipitate due to the action of different quantities of lime was found to be as follows :—

To a juice which had an acidity of 3·2 c.c. normal per 100 c.c. with reference to phenolphthalein, lime in the quantities indicated below was added, and the weight of the precipitate determined.

Acidity of juice in normal c.c. per 100 c.c.	Lime used as CaO ; grams per 100 c.c.	Weight of precipitate per 100 c.c.	Weight of ash in precipitate.
3·2	0	0·242	0·012
2·7	0·013	0·248	0·014
2·3	0·026	0·264	0·024
1·8	0·039	0·288	0·030
1·4	0·052	0·320	0·044
0·9	0·065	0·340	0·070
0·5	0·079	0·370	0·088
0	0·092	0·408	0·104
0·5 (alkaline)	0·104	0·406	0·112

The maximum quantity of precipitation is seen to be reached as soon as the juice becomes alkaline towards phenolphthalein. As explained in the previous chapter, heat or filtration alone removes the colloids from solution, so that the action of lime and these agencies overlaps. The peculiarly specific action of the lime is the precipitation of the phosphoric acid. The figures given above refer to a juice which had been freed from the grosser particles of suspended matter by filtration through glass wool.

The Fate of the Lime in Contact with Cane Juice.—A portion of the lime which is added to cane juice remains in solution, and a portion is found in the precipitate as shown in the following experiment :—To 100 c.c. of cane juice which contained 0·045 gram lime as CaO per 100 c.c., successive quantities of lime were added, and the quantity of lime remaining in solution determined, with the results shown below.

Lime added as CaO grams per 100 c.c.	Acidity of juice c.c. normal acid per 100 c.c.	Grams lime as CaO in solution per 100 c.c.
0	3·2	0·045
0·013	2·7	0·050
0·026	2·2	0·066
0·039	1·8	0·078
0·052	1·4	0·078
0·066	0·9	0·084
0·079	0·5	0·100
0·092	0	0·112

Experiments by Cross[35] gave the results tabulated below. In these experiments neutrality refers to the indication afforded by litmus.

	Juice limed to acidity of......c.c. normal per 100 c.c.	Grams lime in solution per 100 c.c.
	No lime.	0·065
	1·5	0·080
	1·0	0·085
	0·5	0·087
	Neutral	0·094
	0·5*	0·115
	1·0*	0·119
Juice sulphured before liming.	4·0	0·096
	3·5	0·106
	3·0	0·128
	1·2	0·136
	0·5	0·148
	0·2	0·179
	0·6*	0·189
	1·1*	0·214

Hence as the quantity of lime used in defecation increases, so does the quantity of lime salts in solution. It was also demonstrated by Cross that the action of sodium carbonate of phosphates in removing the lime salts is very small.

The Rise in Purity of Cane Juices due to the Combined Action of Heat and Lime.—A rise in purity in a cane juice can only be obtained by the removal of non-sugar from solution. Removal of suspended solids does not mean a rise in purity. In the experiment quoted above, the juice contained 16·0 per cent. of gravity solids, and polarized 13·12, being of polarization gravity purity 82·00. With the addition of 0·052 grams of lime, the gravity solids become 16·048, and the precipitate being 0·310 gram there are left in solution 15·738 gravity solids. The polarization gravity purity must now be 83·26. For other quantities of lime the calculated purity will be :—

Lime added grams per 100 c.c. of juice.	Polarization gravity purity.
0	82·00
0·013	83·25
0·026	83·25
0·039	83·35
0·052	83·41
0·065	83·47
0·079	83·57
0·092	83·69

The weight of the material removed by filtration alone was determined for this juice, with the result that the purity of the filtered juice was found to be

---

* Alkaline

83·29, a rise of 1·29 units, or 76 per cent. of the most that can be obtained by the combined action of heat and lime.

It follows, too, that processes which claim an abnormal rise in purity may be best examined by a demand that their advocates produce the non-sugars removed from solution.

REFERENCES IN CHAPTER XIII

1. *Int. Sug. Jour.*, 1916, 17, 502.
2. *Ber.*, 1894, 27, 1747.
3. *Int. Sug. Jour.*, 1912, 13, 53.
4. Biochimie der Pflanzen, 1, 567; 2, 562, 965.
5. Berichte de Vereins station für Zuckerrohr in West Java, 2, 13.
6. Java *Arch.*, 1896, 4, 532.
7. La. Ex. Sta., Bull. 91.
8. *La. Plant.*, 1916, 57, 238.
9. *La. Plant.*, 1919, 61, 299; Jour. Ind. Eng. Chem., 1919, 11, 1034.
10. Java *Arch.*, 1906, 14, 882.
11. Poggendorf's Annalen, 1850, 81, 413.
12. Fortandlingen i Videnskats-Silksabet, 1865, 2, 35.
13. *Jour. prak. chem.*, 30, 95.
14. *Ber.*, 1887, 16, 765; 1888, 17, 2175.
15. *Zeit. Phys. Chem.*, 4, 226.
16. H.S.P.A., Ex. Sta., Agric. Ser., Bull. 35.
17. *S.C.*, 1895, 27, 404.
18. *Jour. Am. Chem. Soc.*, 18, 693.
19. *Jour. Chem. Soc.*, 1898, 57, 834.
20. *Jour. Am. Chem. Soc.*, 1910, 32, 889-894.
21. H.S.P.A. Ex. Sta., Path. Ser., Bull. 7.
22. "Immuno-Chemistry: Applications of Physical Chemistry to the Study of Biological Antibodies."
23. *Jour. Ind. Eng. Chem.*, 1918, 10, 3.
24. *Bureau of Standards, Bull.* 268.
25. *Bull. Assoc. Chim. Suc.*, 1878.
26. "Cane Sugar and its Manufacture." Geerligs.
27. *I.S.J.*, 1911, 282; 1912, 212.
28. *Deut. Zuckerind.*, 1910, 35, 944-945.
29. *Bull. Assoc. Chim. Suc.*, 1910, 28, 406-407.
30. *Oest.-Ung. Zeitsch. Zuckerind.*, 1908, 37, 359-380.
31. H.S.P.A, Ex. Sta., Agr. & Chem. Ser., Bull. 36.
32. *Comptes Rendus*, 42, 901.
33. Java *Arch.*, 1896, 2, 224.
34. *I.S.J.*, 1916, 561.
35. *I.S.J.*, 1914, 217.

CHAPTER XIV

THE DEFECATION OF CANE JUICE

BY defecation* is understood the process by means of which a clear negotiable juice is obtained by the combined action of heat, lime, settling and decantation. This simple process is that which is used in the manufacture of 96° test sugars, and in combination with sulphurous and phosphoric acids, in the manufacture of plantation white and yellow grocery sugars.

The Mechanism of Settling.—The general law under which bodies fall through a resistant medium was first given by Stokes[1]: $v = \frac{2}{g} \frac{(d_1 - d_2)\ r^2\ g}{\mu}$ where v is the velocity of the falling body, d_1 and d_2 are the densities respectively of the falling body, and of the resistant medium, r is the radius of the body, g is the acceleration due to gravity, and μ is the viscosity of the resistant medium. In a cane juice d_1 and r will not suffer much change from juice to juice; d_2 will vary between the limits 1·05 and 1·08, and of the change in μ nothing is known except that it will fall rapidly with rise in temperature, and that otherwise it will not vary greatly. However, d_1 will always be much larger than d_2, so that change in the latter will not affect the value of $d_1 - d_2$ enough to be of importance in design. It follows then from these considerations that the settling of one cane juice should be typical of all, and that settling should, over a great part of the process, take place at a uniform rate.

If the settling of a suspension such as alumina hydroxide, of concentration about 0·2 gram per 100 c.c. be studied in a tall, narrow tube, there will be seen a short preliminary phase lasting about two minutes, during which no individual particles can be recognised, and over which no settling occurs. After settling has begun, the system soon resolves itself into five zones. The uppermost zone, 1 (*Fig.* 154) is quite clear; next in order is zone 2, characterized by the presence of isolated falling particles which may be called stragglers.

These stragglers terminate in a zone 3, about 0·5 c.m. deep, in which the particles have only a vertical downward movement. Below this is zone 4, in which at an early stage of settling is contained the great proportion of the suspended matter. In this zone there can be recognised a continuous downward and upward stream of particles, the boundaries of which are the contingent surfaces of zones 3 and 5. Zone 5 consists of those particles that have come to rest on the bottom of the tube, or later on the top of the column being built up.

FIG. 154

The upward and downward stream of particles in zone 4 will be seen to be continuous; as upward-moving particles approach zone 3 they turn through an angle of 180° and join the downward stream. These particles have also a gyratory motion, and particles may leave the upward stream and join the downward one and vice versa. As the particles in the downward stream approach the top of zone 5 many particles are seen to detach themselves from the current, and, falling vertically a short distance, join zone 5; these particles then become settled particles, and thenceforth gravitate slowly downwards, so that, while it is being built up, zone 5 is simultaneously shrinking. During this stage of settling, there is, however, a net increase in the height of the column. Zone 4 during the process of settling is continually decreasing in depth both from above and below, and eventually there comes a time when the system is reduced to zones 1, 3 and 5, as by this time nearly all the stragglers will have caught up with zone 3. Zone 3 now very rapidly passes into zone 5, and at this moment, which can be recognised with great exactness, the suspension may be said to have settled. This position was termed by Coe and Clevenger[2] the critical position, and this term will be adopted here. At this moment there is a rapid decrease in the rate of settling, which now becomes progressively slower and slower.

The following principles were found to hold in a study of the settling of suspensions of alumina hydroxide.

Let c=concentration of the suspension, h=height of the column at the commencement of settling, d=height of the column of settled material at the critical position taking place at time t.

1. When c is constant, $\frac{d}{h}=$ constant, and $\frac{h-d}{t}=$ constant.

2. For values of c up to 0·08 grams per 100 *c.c.* the value of $(h-d)/t$ remains constant, *i.e.*, the particles fall independently of each other, and consequently the value of $c\ (h-d)/t$ is proportional to c.

3. For values of c 0·08 to 0·50 grams per 100 c.c. the value of $(h-d)/t$ decreases, but at the same time the value of $c\ (h-d)/t$ increases until c reaches a value of about 0·2 gram per 100 c.c. From this value up to one of 0·5 grams per 100 c.c., the value of $c\ (h-d)/t$ remains constant, that is to say, in unit time the same quantity of material is settled.

4. If d_o be the height of the settled column at the critical position, and d_n be the height when settling has become very slow, then $\frac{1}{t}\log\frac{d_o-d_n}{d_t-d_n}$ =constant, where d_t is the height of the settled column at time t.

5. If d_1 and d_2 be the heights of columns of settled material at the critical position obtained from columns of original height h_1 and h_2, then if in time t the column d_1 has settled to height d'_1 and d_2 has settled to d'_2, then d_1/d'_1 approximates in value to d_2/d'_2.

The Settling of Cane Juice.—The mechanism of the settling of cane juice under the influence of heat and lime is essentially similar to that which has been described in detail as found for alumina hydroxide. It may be best examined in a tube of length about one metre, completely enveloped in a steam jacket. The apparatus used by the writer was developed out of a Liebig condenser, one end of which was blinded off. The results described below were obtained in such an apparatus, and before making an experiment, the juices were boiled gently for one minute in a flask fitted with a reflux condenser, so as to expel any air, the presence of which would have vitiated the experiment.

It must have been observed by anyone who has operated a cane sugar house that great variations occur in the rate of settling, and in the volume occupied by the mud. *Prima facie* these variations may be attributed to variation in the reaction of the juice as regards alkalinity and acidity, or, in other words, to the quantity of lime used. Accordingly, a juice which had an acidity of 1·75 c.c. normal per 100 c.c. (*cf.* Chapter XIII) was limed with 2·0, 1·75, 1·5, 1·25, 1·0, 0·75 and 0·50 c.c. of normal lime suspension per 100 c.c. of juice. The juices so treated were then heated to the boiling point, boiled for one minute under a reflux condenser, poured into a tube one metre long round which steam circulates, and allowed to settle. The results obtained are tabulated below, the figures giving the depth of the clear supernatant column of juice in millimetres. The approximate position of the critical position is indicated by an asterisk.

C.C. Normal Lime per 100 c.c. of Juice.

Time mins.	2·00	1·75	1·50	1·25	1·00	0·75	0·50
2	80	70	100	120	160	320	570
4	190	160	240	280	450	700	700
6	320	300	400	580	760*	870	820
8	450	440	580	782*	840	888	870
10	590	580	755*	838	856	896	885
12	742*	700*	817	856	867	900	904
14	787	777	841	862	874	902	910
16	802	820	849	866	879	902	910
18	812	833	856	868	883	902	910
20	820	844	860	870	885	—	—
22	825	850	863	872	887	—	—
24	830	855	866	874	888	—	—
26	834	858	869	876	889	—	—
28	839	861	871	878	890	—	—
30	843	863	873	880	891	—	—

Of these juices the two with the lowest quantity of lime were "muddy" and distinctly underlimed; the next in order was fairly bright, while the two following ones were bright and clear and could be taken as representative of satisfactory defecation. The two remaining juices, while quite bright and clear, were distinctly overlimed.

A very great difference may be observed in the rate of settling, and also in the ultimate volume occupied by the mud. In addition, the method of separation of the precipitate was different, the two juices with least lime affording a mud that separated in large "flocks," while in the others the precipitate was evenly distributed at the beginning of settling. Correlating this experiment with those described in Chapter XIII, an acidity in the juice referred to phenolphthalein of from 0·25 to 0·50 c.c. normal per 100 c.c. of juice would appear to fulfil all the conditions demanded for a good defecation, *i.e.*, protection against inversion, a bright and clear juice and reasonably rapid settling. It is true that the maximum purification is only obtained when the juice just reaches alkalinity, but the advantages obtained by the use of less lime are to the writer's mind of more moment.

Determination of the Quantity of Lime required.—A method pursued by the writer in a certain factory was as follows :—An acidity of 0·5 c.c. normal per 100 c.c. juice was selected as standard. Lime-cream measuring vessels were prepared of volume one-thousandth that of the tanks in which the juice was received. A half-normal solution of caustic soda was prepared, and the number of c.c. necessary to make 100 c.c. of juice alkaline to phenolphthalein determined for each tank, using the method described in the previous chapter. If a lime-cream of strength 5 normal be used, then as many measuring vessels as c.c. used in the testing would make the juice just alkaline to phenolphthalein. All commercial limes are more or less impure, and it so happened that, in one case when working as above, and using the actual number of measuring vessels as indicated by the test, the desired acidity was obtained. The testing was done at the liming tanks, and, as each tank took six minutes to fill, there was ample time to make the test with due care. The chief difficulty was experienced in keeping the lime-cream at a uniform density. This source of trouble can be avoided by using two lime-cream agitators, each holding about two hours' supply of lime-cream. One container is prepared and kept well agitated by mechanical mixing; the attendant has then ample time to prepare the second tank while the first is emptying. A 5-normal lime-cream is of density 15° Baumé, and, if this is thought to be too heavy, a 2·5 normal lime-cream mixture may be used, the other solutions and containers being altered to correspond.

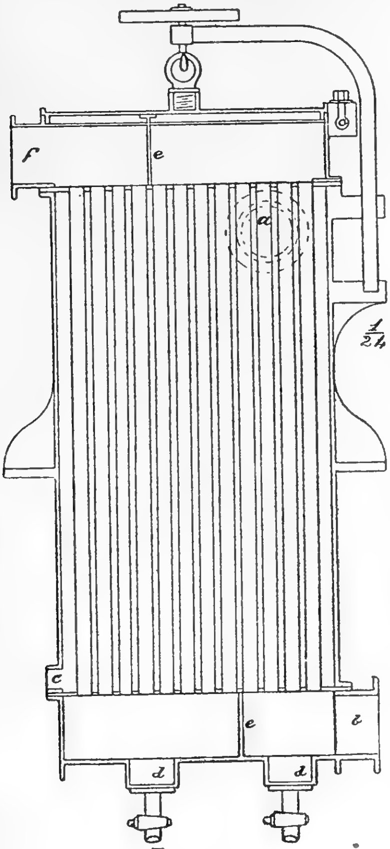

FIG. 155

The writer does not favour the use of automatic liming devices, since considerable variation in acidity occurs from tank to tank, for which no automatic device can make allowance.

A difficulty in operation of this scheme, and indeed of any scheme, occurs in this process in connection with the filtration of the scums. In order to obtain a rapid filtration it is necessary to lime the scums to very distinct alkalinity. If this very alkaline filtrate be then mixed with the clear defecated juice, a disturbance in the system obtains together with a second precipitation in the clear juice. To avoid this, the alkaline filtrate may be systematically returned to the raw juice (after the latter has been weighed or measured), when the excess of lime is neutralized, the control of the additional lime cream required being made as before. By the use of this method a clear defecated juice is obtained with a minimum of lime, and, at the same time, the advantages of the rapid filtration of the scums are retained.

The Practice of Defecation.—After the juice has received the proper quantity of lime, it is necessary to raise its temperature to a minimum of 190° F. in order to obtain a rapid settling and separation of the precipitate. The heating is done either in tubular heaters or in the tanks, which serve as containers for the juice, or in a combination of these two apparatus.

Juice Heating.—The usual type of juice heater consists of a cylindrical shell, in which are arranged tube plates at either end, the tubes passing from plate to plate. The juice circulates within the tubes, and the steam between the plates and without the tubes. By an arrangement of division plates the juice is constrained to travel in alternate directions through nests of tubes. The tubes vary in length from ten to thirty feet, the changes of direction being from three to forty in different designs. In the largest sizes in use the total length of travel of the juice may reach as much as 250 feet. In different designs the velocity of the juices will be found to vary from 100 to 400 feet per minute. Latest practice seems to incline towards the adoption of a higher velocity, following on the generally accepted theory that the transmission of heat increases with the square root of the velocity. On the other hand, the higher velocity demands increased pump power.

Fig. 155 shows a type of vertical heater with a three-way pass, and affording a low velocity to the juice in transit. A horizontal type designed for a high velocity with twelve changes of direction is shown in *Fig.* 156. The horizontal and vertical arrangement is interchangeable in these types. The diameter of tube in these heaters is usually from 1 to 1½ inches. A type of heater common in Cuba consists of a steel cylindrical shell enclosing a steel spiral. The shell may be as long as forty feet, and be three feet in diameter. These heaters are used on unlimed juice, and are expected to operate a whole crop without cleaning, delivering juice at a temperature of 150° to 160° F. to defecators in which the heating is completed.

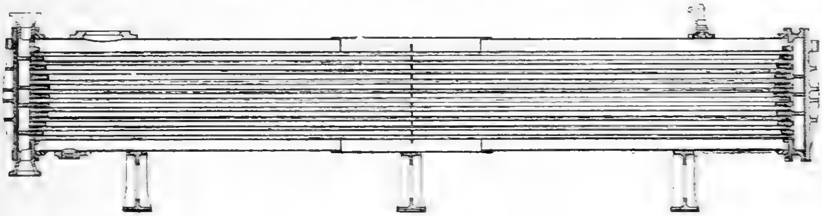

FIG. 156

The quantity of heating surface required will depend on the steam pressure used, on the liability to scale, and on the velocity of the juice in the heater. With freshly cleaned heaters, with a travel of 250 feet per minute, and with steam at 5 lbs. gauge, it is possible to heat one ton of juice per hour from 80° F. to 212° F. with 10 sq. ft. of heating surface. The efficiency, however, falls very rapidly, and there should be installed 40 sq. ft. per ton-cane-hour. This heating surface may conveniently be divided into three units of 13 sq. ft. each, of which two operate while one is thrown out daily for cleaning.

Instead of using tubular heaters, the juice may be heated in the vessels in which the settling takes place, and these vessels then become known as Defecators. Two styles of heating elements are used. One evidently derived from Taylor's patent (4032, 1816) and shown in *Fig.* 157, consists of a system of straight tubes *a*, collected into a header *b*, about which the system can rotate for purposes of cleaning. This system is used with rectangular vessels, and when provided with a gutter they are known as Eliminators in the British West Indies, and as Fletcher Pans in Java. They were, and still are, used to boil juices and to skim off the scums that rise into the gutter *c*. They are usually provided with the syphon float discharge indicated at *d* in *Fig.* 157. French practice changed the straight tubes in the Taylor system to a coil and adopted a circular vessel as shown in *Fig.* 158. This type is usually found provided with draw-off cocks at different levels, and is the form generally found in Cuba. In both designs, 1 sq. ft. heating surface is found per three cub. ft. of capacity. In place of either of these designs the very efficient Witcowitz heating device may be used; this, as arranged in an evaporator, is shown in *Fig.* 205.

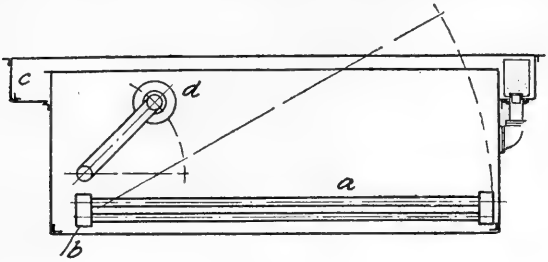

FIG. 157

When the heating is done entirely in tubular heaters, the tanks which receive the hot juice serve merely as settling and storage tanks. In the defecator a system of flotation obtains. On applying heat the emulsioned air attaches itself to particles of the solid matter, and causes them to rise as a blanket to the surface. At the same time the particles of greater specific gravity fall to the bottom. Between these two layers lies the great bulk of the juice in a state of clarity. The operation of heating, once known as "cracking" requires to be carefully carried out, for, if the juice be allowed to boil, the floating blanket is broken up.

Java practice in raw sugar manufacture combines the French defecator with discontinuous settling. Generally three defecators of the type shown in *Fig.* 157 are used, the passage of juice (together with the separation of the scum) through these being continuous; afterwards the partially defecated juice passes to settling tanks, where the separation of suspended matter is completed. The literal translation of the term used for this operation is "troubled defecation."

The Design of Defecators.—If the defecator be considered as a settling tank, the fundamental factor in its design is the rate of settling. Based on the experiments described above, a rate to the critical position of 7 c.ms. per minute should be obtained, the critical position being taken as $0{\cdot}75h$ where h is the height of the tank. After the critical point is reached twenty minutes should be sufficient to so reduce the rate that further settling is uneconomical. Under such conditions the volume of the mud should lie between 10 per cent. and 15 per cent. of the volume of the juice.

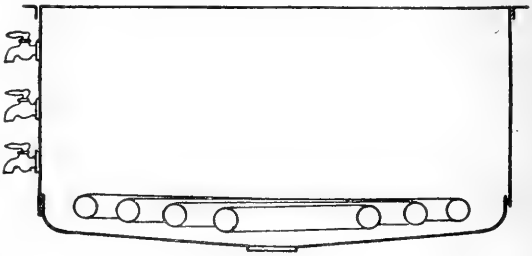

FIG 158

A second factor in design is concerned with the conservation of heat. With circular tanks without a cover, the surface is a minimum for a stated volume, when the height is half the diameter and with square tanks when the height is half the length of one side. In addition, the exposed surface for a given volume decreases as the number of tanks decreases. There is a limit however to a decrease in the number of units since time for settling and decanting must be allowed, and the available time increases with the number of tanks. For example, with four units each holding a half-hour's supply from the mills, and with each tank taking the same time to decant, only one hour's settling is possible. With eight tanks holding fifteen minutes' supply each, the available time for settling is increased to ninety minutes. In addition, an error in liming is more serious with the larger units, since it is generally not detected till the tank has begun to settle. With eight tanks it would be possible to cut out one tank for a round, but this could not be done with only four in the circuit.

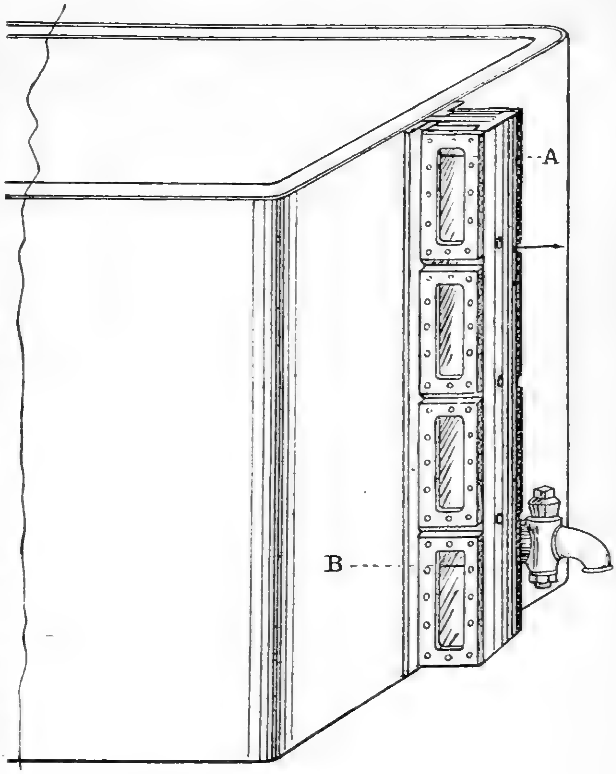

Fig. 159

The settling tanks should be made with the bottoms inclined at an angle of not less than 15° so that the deposit may gravitate readily to the discharge pipe. A cylinder standing on a cone forms a convenient pattern.

An advantage, however, in rectangular tanks is that every two tanks may have one common side. A useful accessory is the sight glass indicated in *Fig.* 159, which allows the rate of settling to be observed. The clear juice may be drawn off by a series of cocks located at different levels, or by a float and syphon discharge. This system was introduced by Sainthill in Jamaica about 1770. Although some heat is thereby lost, it is perhaps better to allow the clear juice to empty into a gutter rather than into a closed pipe, as a better opportunity for inspection is afforded.

Continuous Settling.—In place of the intermittent system, continuous arrangements have been installed in some factories. The form due to Pickering and Macgregor, (patent 4834, 1901), is indicated in *Fig.* 160. The juice enters at *a*, fills the annular space *b*, and flows upward at a very slow velocity until it overflows into the gutter *c*, passing away at *d*. The dirt at the same time settles on to the side of the cone *e*, from which it is removed by the scraper *f*, eventually being discharged by the outlet *g*. When it is necessary to clean the vessel, the clear juice in the cylinder can be run out by the outlet *h*.

The continuous settler known as the Colonial Sugar Co.'s type is shown in *Fig.* 161. The dirty juice enters at *a*, and is constrained to flow in a horizontal spiral by means of the baffle *b*. The deposit of dirt takes place in a direction at right angles to that of flow. The clear juice overflows at *c*. The mud deposited on the sides of the cane is removed by the scraper *d*, and finally passes out of the system at *e*.

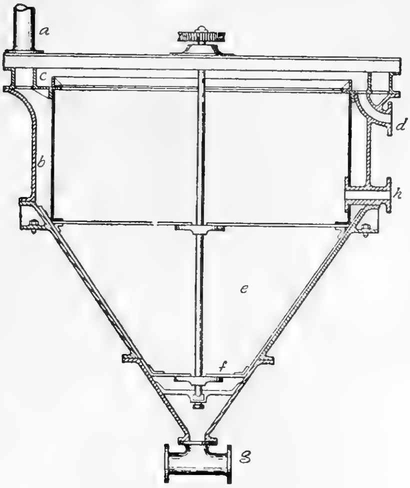

FIG. 160

At the factory of the Hawaiian Commercial and Sugar Co. there are ten such settlers, each 18 feet in diameter at the top, and 900 c. ft. in capacity. As they treat the juice from about 120 tons of cane per hour, the rate of flow at exit calculated over the whole capacity will be 1·5 feet per hour.

The continuous settling tank of Corne and Burguirêres (U.S. patent 1,190,863) is shown in section in *Fig.* 162. The principle of this arrangement is the preliminary deposition of the dirt on the inclined planes, whence it gradually falls off and drops vertically to the bottom of the tank. In the last tank as the juice flows upwards it is strained through cloth.

The Dorr continuous clarifier has recently been introduced into Cuba, where it has been operated at the "Mercedita" Central of the Cuban-American Co. In *Fig.* 163 is shown an installation designed to heat the juice from 2,500 tons cane per day. It consists of a tank 20 ft. in diameter, and divided into four compartments by the inclined trays *a*. Juice limed and heated as usual to 212° F. enters by the pipe *b* and fills the tank by the large central conduit *c*. That mud which does not at once fall to the bottom deposits on the tray of each compartment, whence it is directed by the slowly rotating scrapers *d* to the central conduit, down which it gravitates to the entrance to the pipe line *e*, through which it is drawn by the diaphragm pump *f*, and sent to the mud tanks. The clear juice is drawn off from the upper surface of each compartment through the pipes *g*, all of which terminate in the inspection box *h*, whence the clear juice passes by way of *k* to the evaporators. The pipe shown at *l* serves as a circulating pipe, and those at *m*

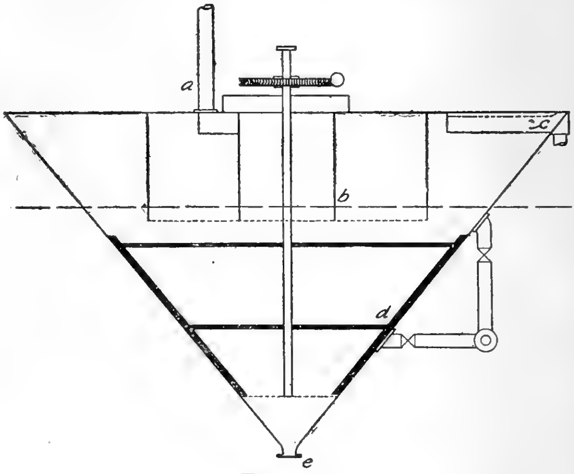

FIG. 161

and *n* are used to empty the apparatus. Air vents are shown at *o*. The centrally located box into which the juice is conducted is provided with an overflow to mechanically remove foam and floating particles. The superstructure shown is for the purpose of carrying the gear required to operate the scraper and pumps, while manholes afford access to each compartment.

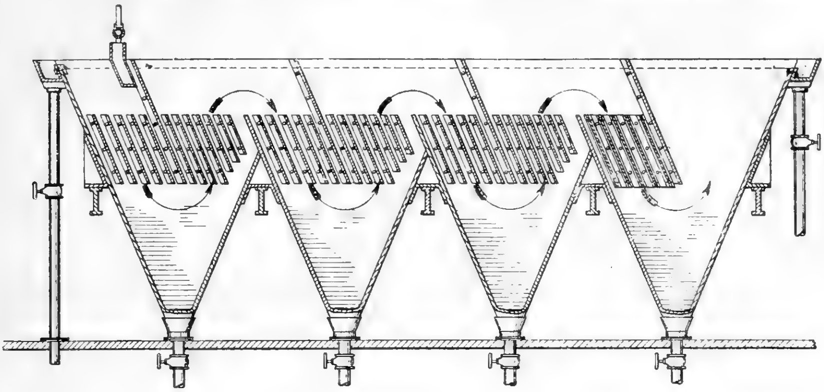

FIG. 162

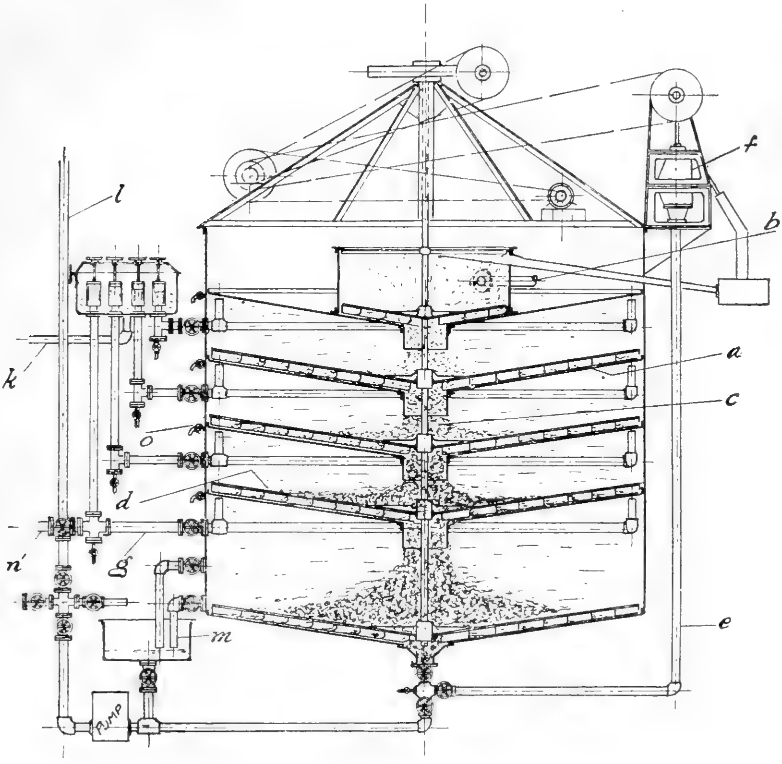

FIG. 163

In Mauritius the clear juice obtained from the defecators is often allowed to flow in a slow current in an open shallow tank called a Bac Portal. In the tank are a number of deflecting plates by means of which the juice is made to change its direction. During its passage the juice is continually depositing its suspended solids.

Flotation of the scums has also been applied to continuous settling, as for example in Harvey and Scard's patent 6093 of 1899. It also forms a part of Rillieux's second patent on multiple effect evaporation. In the Hatton continuous defecator, *Fig.* 163*a*, the cold limed juice enters the vessel by the pipe *C* through the valve *B* and header *A*. As the vessel fills, juice flows into the interior vessel *D*, which is closed at the bottom, and thence upwards through the pipe *C*, and away by the pipe *F* to the clear juice conduit. The scums collect on the surface of the juice and are removed from time to time. Heavier particles which settle are distributed by occasional rotation of the scraper, and are then intended to be carried upwards to join the floating layer. The temperature is controlled by a thermostat, consisting of a tube (shown below *D*) filled with water, the expansion of which acting on the diaphragm fixed at the right hand side of the defecator (as shown in the figure) operates the balanced valve above it.

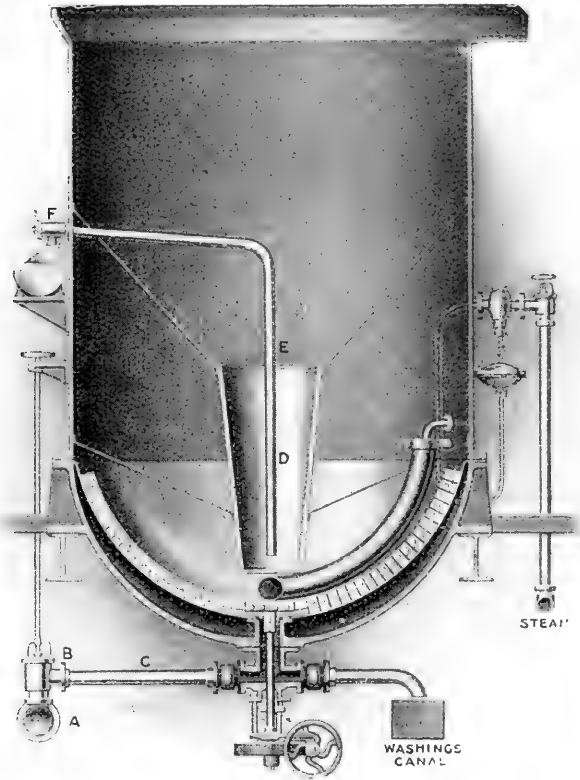

FIG. 163*a*

The Williamson continuous defecator (U.S. patent 1,317,607) has been installed and successfully operated in one or two American refineries on sugar liquor of 60° Brix defecated with lime and phosphoric acid. It consists (*Fig.* 164) of an aerating vessel, air at 15 lbs. gauge entering by the perforated pipe *d.* The aerated material then passes by the pipe 6 into the separating tank provided with steam coils and vertical baffle plates. The precipitate, to which the air bubbles have attached themselves, rises to the surface and continually passes off into the gutter 8, its motion being aided by two horizontal rollers not shown in the drawing. The clear liquor is also continuously removed by the pipe 7. After long intervals particles which escape aeration and deposit on the bottom are removed. At the time of writing, the author is unaware of the adaptation of this apparatus to juices.

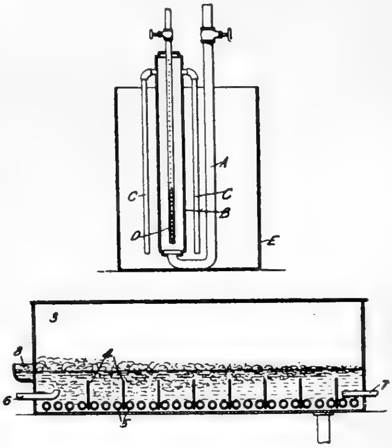

FIG. 164

Although only indirectly connected with defecation, the Thomas-Petree process can be referred to here. As described for a three-mill combination in U.S. patent 1,266,882 the juice from the first mill is treated separately, the defecation mud there obtained being mixed with diluter juice coming from the second mill. A second defecation obtains here, the clear juice joining the first mill juice prior to defecation and the mud being pumped over the bagasse on its way to the second mill. Imbibition water is applied before the third unit, and the juice here expressed forms as usual the diluting agency for the imbibition at the second mill. This process, which eliminates the filter-press station, is at the time of writing in extensive use in Australia.

Centrifugal Separation.—Bessemer's patent (13202, 1850) contains the first notice of this means. He proposed to filter the juice through flannel in a centrifugal, and also aimed at making the process continuous by removing the matter intercepted by the flannel by scrapers moving a little faster than the basket. Possoz' patent (1859 of 1861) introduces the double carbonation process, and includes the separation of the lime sludge in an imperforate centrifugal with continuous discharge of the clear effluent over the lip. This same means is found in the later patents of Laidlaw (1188 of 1897), of Herriot (29286 of 1897), of Hignette (28589 of 1897), of Kopke (29640 of 1913) and in various others. All these adhere closely to the sugar drying type, and none have come into general use.

REFERENCES IN CHAPTER XIV.

1. *Trans. Cambridge Philosophical Soc.*, 1855, 9, 8.
2. *Trans. Amer. Inst. Min. Eng.*, 1916, 55, 336.

CHAPTER XV

THE CARBONATION PROCESSES

IN the carbonation processes a very great excess of lime is allowed to act on the juice, the excess of lime being eventually removed as carbonate through the action of carbon dioxide gas which is pumped through the material contained in special tanks. Actually the schemes would be more rationally termed " excess lime processes," as the effects produced are essentially due to the lime, the rôle of the carbon dioxide being only secondary.

The inception of these processes is to be found in the beet sugar industry, where an excess of lime was thus first removed by Scatter in Germany in 1843. He was followed by Kühlmann and by Rousseau, who described the single carbonation process in patent 14318, 1858. The double carbonation process is due to Possoz, Perrier and Cail in France, and to Jelinek and Frey in Austria. The three first-named inventors described the process in patents 1861 of 1859 and 28 of 1870.

The system was first adapted to cane sugar manufacture by Pellet, and was first used in the cane sugar industry in Java at Wonopringo and Djattiwangi in 1878. It was used at an early period at Almeira in Spain, and as Boivin and Loiseau's " hydro-sucro-carbonate " process in Australia in 1870. It has been sparingly used in the Hawaiian Islands. At the present time some twenty factories in Java, together with at least one each in Egypt and British India, operate the process.

Carbonation processes are only used where a white sugar for direct consumption is made, and as now conducted carbonation is combined with sulphitation, the application of which is discussed in the next chapter.

Chemistry of the Processes.[1]—In Chapter XIII it was stated that when a juice has been limed so far that it is just alkaline to phenolphthalein, no further precipitation takes place with the continued addition of lime, and it would therefore appear to be irrational to add more lime still. When, however, there is a great excess of lime, which is afterwards precipitated in the juice, the calcium carbonate formed carries down mechanically much of the colouring matter not yet precipitated, as well as much of those indefinite bodies referred to as " gums." A secondary, though very important, effect is the ease with which such a material can be filtered, due to the presence of the granular precipitate.

Cane juices normally contain a considerable quantity of reducing sugars, and the action of lime on these bodies is of great importance. At temperatures not above 50° C. the main product of the action of lime is lactic acid appearing in the juice as lactates. These salts are stable and colourless and do not form basic combinations. As the temperature of reaction rises, glucinic and saccharinic acids are formed. These bodies are unstable and form dark-coloured basic salts, which are insoluble only in alkaline solution. With a still continued rise in temperature a more profound decomposition obtains, with the formation of acetic, formic, and carbonic acids, the dark-coloured basic bodies being broken down to simpler colourless combinations. As a result of these reactions several methods of operating have been devised.

Single Carbonation.—The raw juice is received in tanks, and is at once mixed with 7 to 10 per cent. of its volume of milk-of-lime at 20° Baumé, corresponding to 1·5 to 2·0 per cent. of dry lime on the weight of the juice.

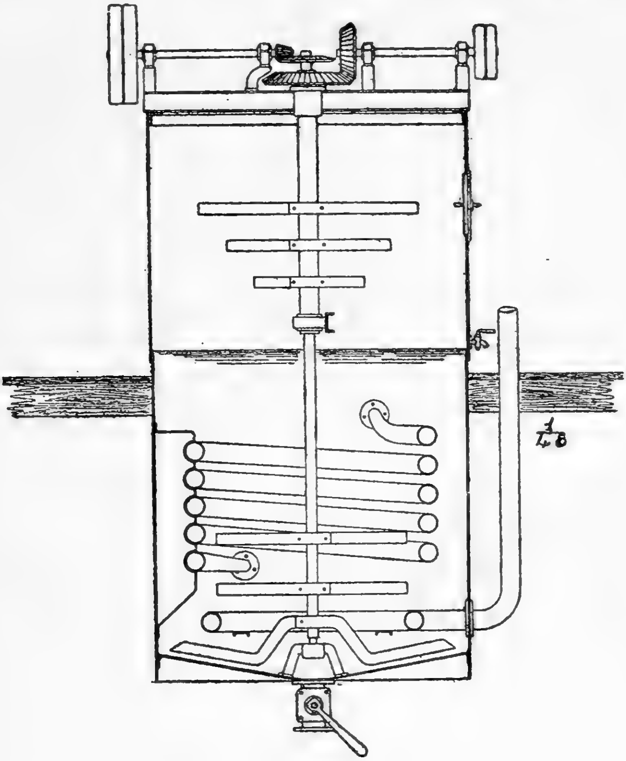

FIG. 165

As described in the earlier Java publications, the temperature of reaction was 60° C., reduced later to 55° C., and now finally given as lying between 45° C. and 55° C., and as near as possible to 50° C. At this temperature very little destruction of reducing sugars takes place, and no darkening at all due to the formation of basic salts. After the addition of lime, carbon dioxide is pumped into the juice, causing the precipitation of the lime as carbonate. At a certain stage of the process the juice becomes very viscous, due to the formation of a complex body, hydro-sucro-carbonate of lime, $C_{12}H_{22}O_{11}$, $2CaO(OH)_2$, $3CaCO_3$. At this stage the juice froths violently, due to the very imperfect absorption of the gas. With continued gassing this complex body is broken up, and eventually a product with an alkalinity of about 60 mgrms. CaO} per litre, corresponding to 0·02 c.c. normal per 100 c.c., is obtained. This point is indicated by a faint pink coloration on phenolphthalein paper. The carbonated juice is now pumped to the filter presses. In the earlier applications of single carbonation, it was customary to raise the temperature to 90° C. before filtration, an operation no longer followed.

Double Carbonation.—The double carbonation process is conducted similarly to the single one up to the breaking up of the sucro-carbonate. At this point the precipitate settles rapidly, the alkalinity being from 0·14 to 0·18 normal per 100 c.c., corresponding with the presence in the juice of from 400 to 500 mgrms. of CaO per litre. At this alkalinity phenolphthalein papers are coloured bright red, and so do not afford a criterion. Resource is then had to "Dupont" paper, made by soaking phenolphthalein papers in oxalic acid of such strength that at this alkalinity they are coloured a barely perceptible pink. This determination is checked by direct titrations as considered necessary. The material is now filtered and the clear filtrate received in tanks, where it undergoes the second carbonation. This is continued up to saturation, when the juice is boiled for a few minutes to break up bicarbonates and again filtered. In the earlier descriptions of the process great stress was laid on the importance of the first filtration in alkaline medium, so as to eliminate the basic dark-coloured salts. These statements referred to a process in which the lime was allowed to act at 60° C. It appears that when operating at 50° C. these bodies are not formed, so that the advantages of double carbonation tend to disappear, and indeed Harloff and Schmidt[2] distinctly state that the differences between the single and double processes are very small. The double process is, however, safer, and opportunity is afforded to correct any error that arises in the first operation.

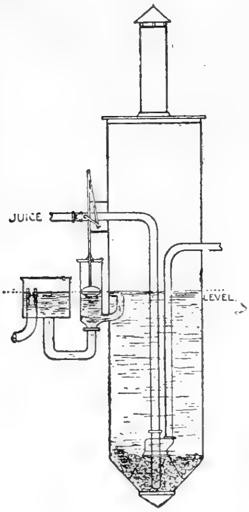

FIG. 166

De Haan's Process.[3]—In this process the lime is added gradually while the carbon dioxide is being pumped into the juice, the other details being as already described with the exception of the quantity of lime used. Under these conditions the calcium carbonate is formed in a very granular condition and the lime used is only 1 per cent. on the weight of juice, indicating a corresponding saving in coke, dilution, and filter cloths. There is also no formation of the sucro-carbonate, with consequent elimination of the troublesome frothing.

Battelle's Process.[4]—Battelle's process reverses the general trend of the carbonation schemes by allowing the lime to act at the boiling point, whereby the reducing sugars are entirely eliminated, affording the final colourless products of complete breakdown. In other respects the process follows the usual routine. This scheme, while giving means to obtain a superior plantation white sugar, affords a molasses from which the sugar may be extracted by the Steffen process of substitution, as is done in the beet sugar industry. Up to the present this process has not been worked on the large scale, but the truth of the inventor's revolutionary proposals has been demonstrated in large-scale experiments made by the Hawaiian Sugar Planters' Association.

Apparatus employed in Carbonation Processes.—The specialized apparatus employed in carbonation are described below.

Carbonation Tanks.—The tanks used in the first carbonation are plain sheet-steel circular or rectangular tanks, of height up to 20 feet, and of diameter dependent on the capacity required. At the bottom is arranged a perforated coil or cross where is introduced the gas. A steam coil, or, more usually, a Witcowitz heater (see *Fig.* 205) is also provided. Other accessories are mechanical stirring gear, including a scraper following the slope of the bottom to remove precipitate settling thereon. The stirring gear may also carry blades to break up the froth that forms during a period in the carbonation or otherwise this may be dispelled by a jet of steam or of compressed air. The tanks are often provided with a chimney to carry away the unabsorbed gases. A section through a typical form is shown in *Fig.* 165.

The second carbonation tanks are similar to the first, save that the appliances connected with the foam are dispensed with, and that the additional height required for this same purpose is avoided.

Continuous carbonating tanks are also used to some extent, especially for the second carbonation. A type is indicated in *Fig.* 166.

For first carbonation tanks it is customary to allow a gross volume of 40-50 cu. ft. per ton-cane-hour divided into four or five units. This refers to the gross capacity of the tanks, a height of 10-12 feet being left above the level of the juice to allow for foam. For second carbonation a capacity of 15 cu. ft. per ton-cane-hour divided into three units is customary, a dead space of three feet being sufficient. The first carbonation occupies from 10 to 15 minutes, from 3 to 5 minutes being required for the second.

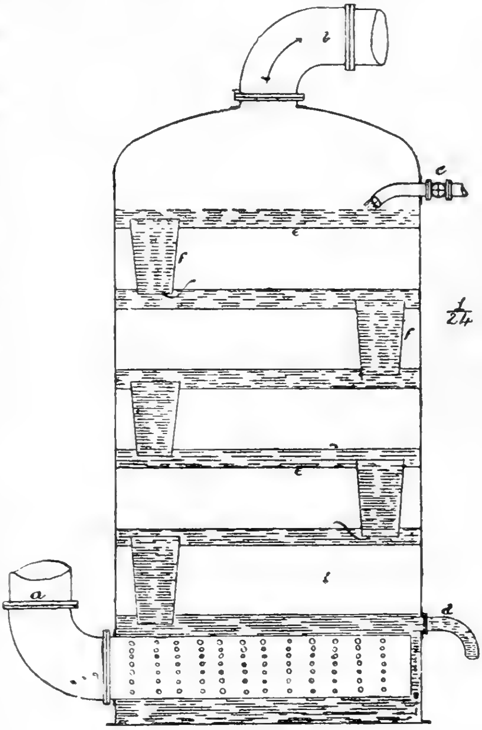

FIG. 167

Gas Washer.—The carbon dioxide used in this process is, of course, generated on the spot by burning limestone; after being generated in the kiln, the gas is passed through a gas washer, a form of which is shown in *Fig.* 167. It consists of an upright cylindrical vessel, in which is placed a series of transverse horizontal partitions *e*; in each of these, and projecting a few inches, are fitted the funnels *f*; water is pumped into the vessel by the pipe *c* and flows over the partitions, down through the funnels and out through the pipe *d*. The gas from the kiln enters by the pipe *a*, the lower end of which is perforated, and flows upwards in the direction indicated by the arrows. In the passage of the gas the dust carried over is deposited and the gas cooled down to a temperature of 40° C. Various other forms of gas washers are made; in one, perforated plates take the place of the transverse partitions described above. Any of the forms of jet condensers described in connection with evaporation serve equally well as gas washers.

In certain beet factories the gas evolved from the kiln is purified by being passed through closely packed carbonate of soda or through a solution of this substance; the object of this procedure is to eliminate any sulphurous acid which may be present, as the coke employed contains sulphur.

Lime Kilns.—The carbon dioxide requisite for the carbonation process is obtained by burning lime in kilns at the factory, which in this case makes its own temper lime from crude limestone. Lime kilns are of two types, *continuous* and *intermittent*, and the former, of course, is the type required for a sugar factory. They may also be classed as *long flame* and *short flame* kilns. In the former the fuel is burnt on a hearth, and the products of combustion pass through the limestone in the kiln proper. In the latter the fuel and lime stone are mixed together and charged into the kiln from above. Externally fired kilns give a purer product, since no contamination with the ash of the fuel results. As, however, the ash of gas coke, the fuel usually employed, is insoluble, this objection has for sugar work little weight. The external-fired kiln finds application when wood or lignite fuel is used.

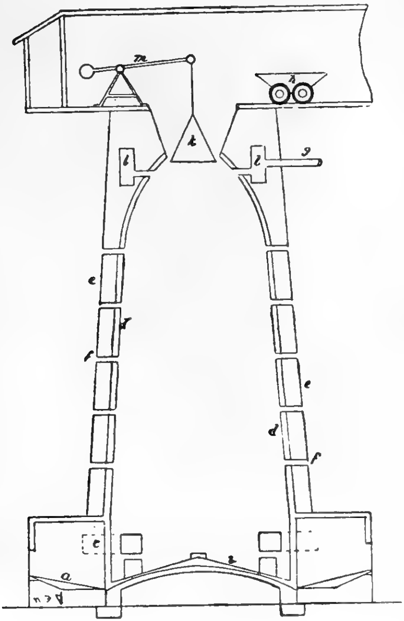

Fig. 168

The early form of kiln consisted of a truncated cone, as shown in *Fig.* 168, of height up to 40 or 50 feet. The limestone and fuel were charged into the kiln from above and, as shown at *a*, supplementary external furnaces were sometimes provided. The burnt lime was discharged through doors, *b*, arranged around the base of the kiln, the bottom of the kiln being built sloping downwards and outwards. The gas collected in the chambers, *l*, whence it passed by pipes *g* to the pumps.

The present form of kiln is known as the Kern or Belgian kiln, and is shown in *Fig.* 169. It consists of two opposed truncated cones, the upper one being by far the longer. The mouth of the lower cone terminates about two feet from the ground and immediately over a conical surface. The action of the kiln is continuous, burnt lime gravitating on to the hearth, being continuously removed as further charges are dumped into the kiln.

The height of the Belgian or other form of kiln varies from a minimum of 30 feet to a maximum of 70 feet. With less height decomposition of the limestone is incomplete, and with a greater one the weight of the column of limestone causes crushing of the lower strata. There is no limit, of course, to the diameter.

In American beet sugar houses, continuous rotary gas and oil-fired kilns have come into general use. These have developed from the cement kilns, the design of which they closely follow. The kiln consists of a rotary cylinder slightly inclined from the horizontal. The limestone and products of combustion travel in the same direction, the lime being removed at that end of the cylinder remote from the burners.

Capacity of Lime Kilns.—Very widely variant capacities are given in standard works. Ware states that the Belgian kiln will readily afford 500 kilos burnt lime per day per cubic metre capacity. This reduces to 1·4 lbs. per hour per cu. ft. Geerligs, however, referring to practice in Java, gives the capacity as 16 lbs. lime per day per cu. ft., or only 0·66 lbs. per hour per cu. ft.

The maximum quantity of lime used in any form of carbonation process is 3 per cent. on cane, or 60 lbs. per ton. Following on which of the above two capacities is selected as a basis of design, the cubic contents of a kiln should be either 43 or 91 cu. ft. per ton-cane-hour. Four factories in Java, of which the writer has data, had 55, 66, 75 and 108 cu. ft. per ton-cane-hour, or an average of 75 cubic feet.

Fuel required in Lime Kilns.—For the decomposition of 100 lbs. of commercial limestone of 95 per cent. purity 6 lbs. of gas coke are required. Generally, in European beet practice 9 lbs. of coke are required, and under very good control this may be reduced to 7·5 lbs. Reduced to volume measurements in actual work, from 3 to 4·5 volumes of limestone are used to 1 volume of coke.

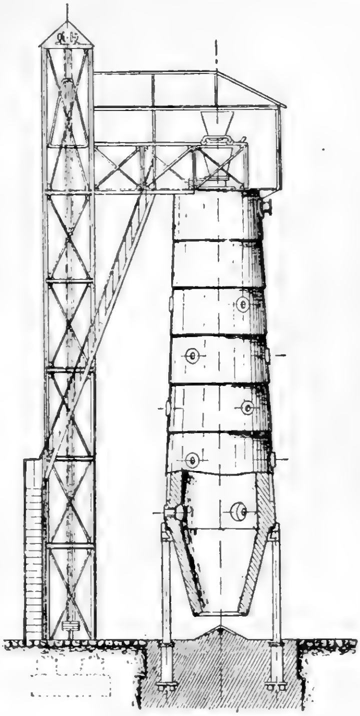

FIG. 169

Action of the Lime Kiln.—In the lime kiln as usually operated, four zones are to be recognised. The upper zone is occupied entirely by the produced gases, and serves as a regulating zone and reservoir, whence the pump draws. Below this is the heating and drying zone, where water is removed from the materials, which are also raised to the decomposition temperature. This temperature is of the order 1,000° C., and when the materials in their downward passage reach this temperature the decomposition zone is reached. Here the temperature varies from 1,000° C. to 1,300° C., and below it is reached the fourth zone or zone of cooling extending to the lowest part of the kiln.

Of these zones, that devoted to cooling occupies about half the total capacity of the kiln, the decomposition zone occupying one quarter, and the heating and regulating zones one-eighth each. In operating a kiln a high percentage of carbon dioxide in the gas is required, together with absence of carbon monoxide, which should not exceed 0·5 per cent. The absolute maximum of carbon dioxide is, with coke 10 per cent. on limestone, 38 to 39 per cent., and a percentage of not less than 30 per cent. is considered satisfactory. Accompanying this will be up to 2 per cent. of oxygen, the balance being nitrogen. The excess of oxygen is necessary, since in the upward passage of carbon dioxide and water through the incandescent coke some decomposition into carbon monoxide occurs, which has afterwards to be burnt to the dioxide in the upper portion of the kiln. The temperature at which calcium carbonate begins to dissociate is about 400° C., but the reaction is a balanced one, definite positions of equilibrium determined by the temperature and pressure obtaining. Accordingly, temperatures much higher than the dissociation temperature must be maintained, and experience has found that a temperature in the decomposition zone of 1,000°–1,200° C. is economically proper. Higher temperatures are inadvisable, since at about 1,300° C. the carbon dioxide decomposes into carbon monoxide and oxygen, which pass into the gas aspirate from the kiln. A second result of a too high temperature results in the formation of "dead" lime, which requires an abnormally long time to slake. This phenomenon is usually attributed to the formation of a skin of fused silica on the lime, but it is more probably due to the formation at high temperatures of an allotropic form of lime, which only slowly passes into the normal form.

Choice of Limestone.—The objectionable constituents which occur in limestone are silica, alumina, magnesia and sulphate of lime. If either of the two former is present during the calcination, fusible silicates and aluminates of lime and magnesia are formed, giving rise to what is known as *scaffolding* in the kiln—i.e., a fused mass is formed preventing the descent of the lime. In addition, their presence may be a cause of slow slaking of the burnt lime. Silica also may dissolve in the juice and be precipitated both as scale in the evaporators, besides causing filtration difficulties. Magnesia and sulphate of lime are also likely to cause scale in the evaporators.

Below are given analyses by Gallois and Dupont of different types of limestone :—

Material.	Bad.	Passable.	Excellent.
Moisture	4·10	6·25	1·21
Sand, clay, and insoluble matter ...	4·50	3·17	0·55
Organic matter	1·20	1·12	0·41
Soluble silica	2·10	0·64	0·20
Oxides of iron and alumina ...	0·37	0·15	0·23
Calcium carbonate (limestone) ...	85·86	87·93	96·58
Magnesium carbonate	0·95	0·53	0·50
Soda and potash	0·05	—	—
Undetermined	0·87	0·24	0·32

The inefficient working of a kiln may arise from the following points :—

1. Scaffolding, which may as already mentioned be caused by the presence of silica or alumina, and also by careless work in changing or in mixing the limestone and fuel.

2. Withdrawal of unburnt lime when too little fuel is used or when combustion is too rapid.

3. Presence of carbon monoxide, due to too little air being admitted for complete combustion, or to too low a temperature in the kiln.

4. Presence of air due to leaks in the masonry or to air sucking back, or to working the pump too fast.

The composition of the gas from the kilns varies within wide limits, the theoretical maximum of carbon dioxide being 38·7 per cent.; in general practice the percentage lies between 25 and 30 per cent., with from 1 to 3 per cent. of oxygen and 65 to 70 per cent. of nitrogen. Traces of carbon monoxide may be present, but should not rise above 1 per cent.; sulphur dioxide derived from sulphur in the coal may also occur.

Carbon Dioxide Pumps.—The pumps used to aspirate the carbon dioxide are now slide-valve pumps similar in design and construction to those used in the dry vacuum process described in the chapter on Evaporation. A table of their capacities is given below, taken from a Continental maker's catalogue.

Quantity of gas sucked per hour, cu.m.	500	825	1050	1300	1800	2050	3375	4050
Diameter of steam cylinder, mm.	275	350	375	400	470	500	600	700
Diameter of carbonic acid cylinder, mm.	500	550	600	650	750	800	1000	1100
Piston stroke, mm. ...	470	550	550	630	700	700	800	1000
Revolutions per minute ...	75	70	70	65	60	60	55	45
Steam inlet, mm.	60	80	80	90	110	110	140	170
Steam outlet, mm. ...	70	90	90	100	120	120	150	185
Diameter of suction pipe, mm.	110	125	135	150	175	190	240	270
Diameter of delivery pipe, mm.	100	110	125	140	160	170	220	250

Differences between Carbonation and Defecation.—In addition to the differences already noted, others, best observed in the following analyses of molasses quoted from Geerligs,[6] exist. They lie mainly in the greater quantity of lime salts, in the very small optical activity of the reducing sugars, and in the smaller quantity of "gums."

	Brix.	Dry Substance.	Polarization.	Sugar per cent.	Polarization Gravity Purity.	Absolute Purity.	Reducing Sugars.	Gums per cent.	Lime per cent.
Carbonation ...	83·7	78·0	31·1	31·3	37·1	39·8	21·6	0·74	1·58
Defecation ...	85·4	80·0	28·8	33·9	33·7	42·4	23·6	1·95	0·53

In the reports issued for the Mutual Control of Java factories for the year 1912 the following averages can be deduced. Seventeen carbonation factories raised the purity of the raw juice from 82·2 to 84·9, or 2·7 units, whereas 114 defecation factories raised the purity from 80·1 to 82·4, or 2·3 units. A difference so small as this is without significance, and especially so since the purities referred to are on a polarization basis.

The relative yields are still in the controversial stage in Java. One of the latest estimates of these, referring solely to a production of white sugar, is that of Van der Went.[7] Putting the yield with sulpho-defecation at 100, he finds that with double carbonation is 100·32, with de Haan's method 100·64, and with Bach's process 100·96. Compared with the yields of 96° test sugar, the results of de Haan in one and the same factory may be quoted. He found that the yield of available sugar (Winter's formula) was 100·62 with 96° test sugar, as compared with 99·02 when using sulphodefecation.

REFERENCES IN CHAPTER XV.

1. *S.C.*, 1897, 27, 229.
2. "Plantation White Sugar Manufacture," London, 1913.
3. *Int. Sug. Jour.*, 1914, 16, 131, 438.
4. U.S. Patents, 1,044,003; 1,044,004.
5. *Sucrèrie indigène et coloniale*, 1887, 22, 159.
6. "Cane Sugar and its Manufacture," Manchester, 1909.
7. Java *Arch.*, 1914, 22, 1084.

CHAPTER XVI

SULPHITATION

THE discharge of the colouring matters of cane juices by acids has been already mentioned, and to this property is due in the main the extended use of sulphurous acid in the manufacture of white and yellow consumption sugars. Sulphurous acid in addition is a reducing agent, and it may have some further action on the colouring matters due to this property; granted, however, that such an action obtains, the results would be only temporary, the colour being restored on exposure to the air following on oxidation. To such a cycle may be ascribed the darkening which is frequently observed when plantation white sugars are stored for any length of time. Apart from the action of sulphurous acid on the natural colouring matters, it has a specific action on the ferric salts, which find their way into the juices from the pipes and containers. These ferric salts form very dark-coloured compounds with the polyphenols expressed from the cane, and also with the lime-reducing sugar decomposition products, which, according to Schneller,[1] are akin in structure to the polyphenols. These dark-coloured bodies are nothing else than inks. The ferrous compounds to which they are reduced by sulphurous acid are, however, colourless, and Harloff and Schmidt[2] distinctly state that these do not crystallize with the sugar, so that in their absence there is no darkening of sugar due to this cause. Sulphurous acid shares with any other acid the power of protecting juices from discoloration on boiling. As already stated, the action of alkalies on reducing sugars results in the formation of dark-coloured bodies, and a darkening to this cause is well known to occur between the defecated juice and the syrup in the ordinary defecation process. Such a darkening also occurs in the carbonation process and is here caused by the permanent alkalinity due to the potassium carbonate.* Suspended calcium carbonate due to bad filtration is also sufficient to cause this change. If then the juices coming from the second carbonation, or the first where only one is used, be rendered acid before evaporation they will maintain their light colour and will be especially adapted for the making of white sugars. Such a scheme, using sulphurous acid as the acid, was introduced into Java by Harloff, and is known as the acid thin-juice process. Acid thin-juice processes without carbonation had, however, been used for many years previously in Louisiana, Demerara and Mauritius, although no detailed account of them seems to have been given.

The use of sulphurous acid was first suggested by Proust[3] in 1809, and its application forms the subject of French patent 2543, 1829, granted to Dubrunfaut. The earliest British patent is that of Stolle (7573, 1838), which describes its application much as it is now used. Its introduction is, however, due to Melsens,[4] who in 1849 published a paper which had a

---

* In the Battelle process, with complete elimination of the reducing sugars, this discoloration should not occur.

great influence on sugar manufacture. Prior to this time both beet and cane sugar houses specializing in white sugars had employed animal charcoal filtration, and the first efforts to eliminate this agent may be traced to Melsens' work. In Louisiana the application of sulphitation dates from 1860, where it was used under Stewart's patent (U.S. 22590, 1859), and at about the same time it was introduced into Mauritius through the agency of Icéry.

Sulphitation Processes.—There are a great many ways in which sulphur is used alone and in combination with other agents. Some of these methods are described below.

Raw Juice Sulphitation.—In the older schemes, sulphitation was carried out on the raw juice, the lime and sulphurous acid being added separately to the cold juice, practice differing as to which defecant was added first. In either case the same end point was aimed at, namely, a juice with an acidity in terms of phenolphthalein of from 0·5 to 0·7 c.c. normal per 100 c.c. When the operation is conducted on cold juice, however, a rather serious trouble arises. Calcium sulphite is more soluble at ordinary than at higher temperatures, and it has also the property of forming supersaturated solutions. Consequently, when a cold limed and sulphured juice is heated, it deposits large quantities of calcium sulphite on the tubes of the heaters, and also upon the tubes of the evaporator. Java practice has developed a routine which satisfactorily eliminates this trouble. The raw juice is heated to a temperature variously quoted as 70° C. to 80° C., over which region the solubility of calcium sulphite is at a minimum. After reception of the hot juice in open vessels, the necessary quantities of milk-of-lime and of sulphur dioxide are added simultaneously. The treated juice now passes through a second heater, where its temperature is raised to 100° C., and thence to the settling or filter supply tanks. In this way is avoided the coloration due to lime-reducing sugar decomposition products following on heating after addition of lime only, or inversion due to heating after addition of sulphur dioxide only.

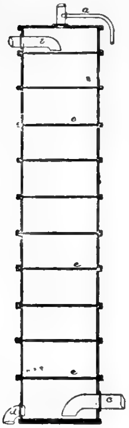

FIG. 170

Any deposit of scale which may form on the second heating can be systematically removed by alternating the flow of juice through the first and second heaters. Whatever method is adopted, it seems general to use about twice as much lime as would be used in ordinary lime defecation, so as to obtain a sufficient bulk of calcium sulphite to carry down and entangle the colloids ; at the same time the simultaneous application of lime and sulphur dioxide reduces the quantities that are requisite for a good defecation.

The action of sulphur dioxide on cane juice has been examined by Browne.[5] He shows that due to the action of sulphur alone a precipitate amounting to 0·3 to 0·4 per cent. on the weight of the juice is formed, and the composition of this precipitate he finds as below :—

Water	4·07	4·49
Fat and wax	32·57	19·71
Protein	23·63	21·75
Ash and earthy matter ...	9·48	20·45
Crude Fibre	8·05	10·37
Gums, etc.	22·20	23·23

The purification due to the action of sulphur alone, however, does not obtain in practice, since with the addition of lime to neutrality a part of the precipitate dissolves.

Acid Waters in the Evaporation.—However carefully the acidity of the juices is controlled, the condensed waters in the multiple effect will be found to be acid, and to contain not only sulphurous but also sulphuric acid. This is an evil which must be accepted, since, if an alkalinity sufficient to prevent it were carried, the benefit of the application of sulphur would be stultified. Hence when such waters are used as boiler feed, they must be carefully neutralized with soda before going to the boilers. The most efficient location to effect this neutralization is in the bodies of the vessels themselves, thereby saving corrosion in the pumps and piping. This end is obtained by allowing carefully regulated quantities of soda solution to flow into the vapour pipes or calandrias. The requisite quantity of soda as carbonate should not exceed one lb. per 100 tons of cane.

Sulpho-carbonation.[2]—In this process, which is due to Harloff, and which is known as the "acid thin-juice" process, the complete neutralization of the first carbonated juice is effected by means of sulphurous acid. The saturation may be carried out wholly by this acid or by a combination of this and of carbon dioxide, the acidity finally obtained referred to phenolphthalein being from 0·6 to 0·8 c.c. normal per 100 c.c. By this means the darkening of the juice on evaporation due to potassium carbonate alkalinity is avoided, and there results a lemon-yellow syrup affording a high-class white sugar.

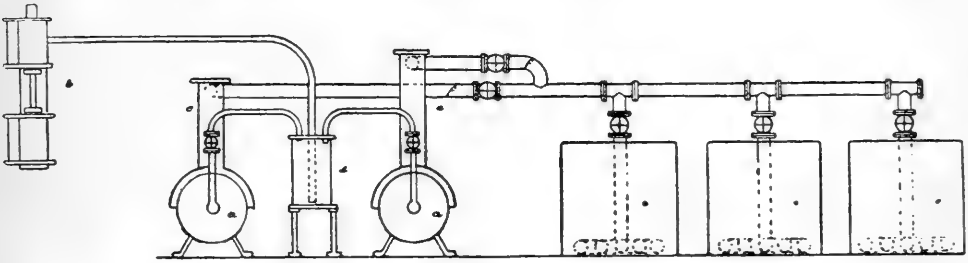

FIG. 171

Syrup Sulphitation.[7]—Syrup sulphitation was introduced into Java by Bach, and his process is in many ways the most rational one by which a plantation white sugar can be made. The syrup as it leaves the evaporator is treated with 2 to 2½ per cent. of milk-of-lime at 15° Baumé equivalent to from 0·3 to 0·4 per cent. of dry lime. Immediately after the addition of lime the material is sulphured to neutrality, and the copious precipitate which is formed is filtered off. The clear filtrate is then sulphured to an acidity of from 2 to 3 c.c. normal per 100 c.c. and boiled to massecuite. Syrup filtration may, of course, be combined with any of the other routines, and is to be recommended as the surest means of giving a material free from suspended matter, upon which the brightness of the sugar largely depends.

Apparatus used in Sulphitation.—In the apparatus employed in sulphuring there are two independent units, the oven and the absorption appliance. The oven is merely a cast-iron chamber into which the sulphur is introduced on a tray. The combustion of the sulphur may take place with free access to the atmosphere, a draught being obtained by a fan or jet of exhaust steam, as in connection with the "sulphur box" described below. Direct access to the atmosphere is, however, to be avoided, since in the presence of water sulphur burns in part to the trioxide, giving rise to sulphuric acid in the juices, the presence of which is objectionable. The air admitted for combustion should therefore be dried by passing through quicklime before it reaches the oven. A very simple and convenient dryer may be made from a piece of iron pipe about six inches in diameter and four feet high, and holding about forty lbs. of coarse lime. As required, depending on the humidity of the air and the quantity of sulphur burned, the lime is renewed. The fire area of the stove depends on the draught or on the air pressure when compressed air is employed. With a draught of two to three inches of water two lbs. of sulphur can be burnt per sq. ft. per hour. As the sulphur burns the rise in temperature causes some part to sublime, and this being carried forward will in time cause the pipes to become choked. The oven should therefore be provided with a water-cooled dome serving to condense the sublimate, and from which it may be periodically removed. The sulphur furnaces are of such simple construction that they may be readily made on the plantation. For continuity of operation they are conveniently used in pairs.

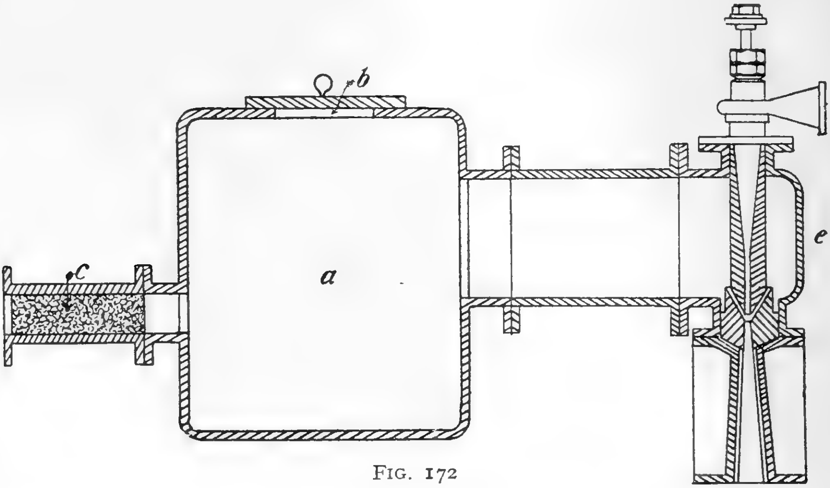

FIG. 172

The means for the absorption of the gas may be the sulphur "box" or tower indicated in *Fig.* 170. This consists of a wooden vertical shaft, in which are arranged perforated trays *e*. The juice is delivered to the top of the box by the pipe *b*, and flowing down meets a stream of gas entering by the pipe *c*, and travelling upwards under the influence of the draught caused by the steam jet *a*. In place of perforated trays other arrangements borrowed from the condenser may be used. In place of the tower it is better practice to sulphur the juice or syrup in tanks, and in this case the gas must be pumped to the tank or conveyed thereto by means of an ejector or by compressed air. A diagrammatic scheme of such an arrangement is shown in *Fig.* 171, where *a* represents the ovens with water-cooled domes, *b* the air compressor, *c* towers packed with coke or similar material serving as a filter, *d* a chamber filled with dry lime, *e* the sulphitation tanks and *f* the conducting piping. Another type of oven which operates satisfactorily is shown in *Fig.* 172. It consists of an iron oven with a heavy door, *b*, resting on and making a tight joint with a rubber seat and covering the aperture through which the sulphur is periodically introduced. The draught is obtained by means of the injector *e* using live steam, and affording sufficient head to force the gas into the tanks. The air enters through the pipe *c*, which is packed with dry lime. The injector may be made of lead alloyed with three per cent. of antimony.

An apparatus very widely used in the beet sugar industry is that of Quarez, *Fig.* 173. The juice runs from the mills through the pipe *B* into the tank *A*, divided into two compartments by the plate *C* reaching nearly to the bottom. From here it is forced by the pump *D* through the injector *E*, which communicates by the piping *H* with the sulphur furnace *G*, so that the gas is drawn into the juice, which now travels by the pipe *K* into the tank, whence it overflows through the pipe *M*. In this arrangement the quantity of juice passing regulates the rate at which the sulphur is burned.

A method of sulphuring which was once largely used in the beet sugar industry is that of Seyferth (patent 2756 of 1870), which drew the gas directly into the vacuum pan during the operation of boiling. This scheme is only exceptionally to be found in the cane industry.

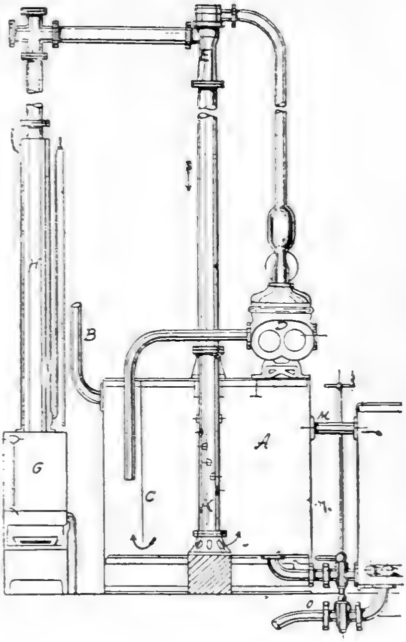

FIG. 173

Quantity of Sulphur used.—In the different schemes this will depend on the quantity of lime used and on the acidity desired. Starting with a neutral juice, each 1 c.c. of normal acidity per 100 c.c. of juice corresponds to the presence of 0·16 gram sulphur per 1,000 c.c., or very closely to 0·016 sulphur per cent. on cane, when the weight of juice is the same as that of the cane. Actually when using sulphur only on second carbonated juices the consumption is found to be about 0·02 per cent. on cane, in sulpho-defecation processes about 0·04 per cent. on cane, and in Bach's scheme it rises to 0·1 per cent. on cane. As sulphur burning to SO_2 requires oxygen equal to the weight of the sulphur, the air required will be 4·5 lbs. Actually due to inefficiency 9 lbs. air should be allowed in design. The volume of air remaining unchanged during combustion, per lb. of sulphur there will be at the normal temperature 125 c. ft. to be pumped. The maximum volume per cent. of sulphur dioxide in the gas will be 20·8 per cent., and with twice the necessary quantity of air admitted this will fall to 10·4 per cent. These data give all the essentials required for design.

Hydrosulphites.—The bleaching effect of hydrosulphurous acid was first employed in Ranson's process,[6] which passes sulphur dioxide into juices in the presence of tin or of zinc. About 1904 stable hydrosulphites were manufactured, the calcium salt being sold under the name of "Redos" and the sodium salt as "Blankit." These react under the equation, $Na_2S_2O_4 + O + H_2O = 2NaHSO_3$. In the cane sugar industry they have been chiefly employed in the decolorization of syrups in white sugar manufacture. As the bleached material colours again on exposure to the air, they are used in the vacuum pan shortly before striking. The quantity required to obtain the maximum effect varies with different juices. With those that the writer has had to deal, it is about one lb. per ton of sugar, though the makers state that considerably less is usually required. The claim that so small a quantity can materially affect the viscosity is unworthy of consideration.

Phosphoric Acid and Phosphates.—Phosphoric acid is employed as a defecant either as the free acid or as a soluble phosphate. Their action depends on their property of forming a bulky precipitate with lime, which on its formation entangles and carries down colloid matter. This action occurs to a certain extent in lime defecation due to the presence of phosphates in juices. To obtain the maximum effect the lime and acid should be present in the proportions to form the tri-basic salt. The quantity used is generally about 5 lbs. per 1,000 gallons of juice. Apart from this action, phosphoric acid is a very weak acid, and it hence forms a convenient agent for obtaining an acid reaction when using an acid thin-juice process, and it is this function which is employed in Demerara and in Mauritius. These two effects may of course be combined in the same factory, though not in the same operation. The descriptions extant of the routines adopted in Java in white sugar manufacture do not indicate that phosphoric acid is used there in an acid thin-juice process, though there would be advantages in doing so, reserving sulphurous acid for the final decolorization of the syrup. Sodium phosphate in the form of the di-basic salt has also been used as a means of removing small traces of iron salts from syrups immediately before boiling to grain.

The use of phosphates as a defecant seems to be first mentioned in patent 13634, 1851, granted to Oxland and Oxland, and again in one issued to Collette (1 of 1854). Their introduction into the cane sugar industry is due to Ehrmann in Mauritius about 1860.

Alumina.—Salts of aluminium in the presence of alkalies afford a very bulky precipitate of the hydroxide which at the moment of its formation carries down much colloid and colouring matter. Such a reaction was used in the cane sugar industry at least 150 years ago, and is described in the Marquis of Cazaud's treatise of date 1770. The property is also included as a claim in Howard's patent (3754, 1813), and the alumina so prepared was for long known as "Howard's finings." Proposals for its use in one or another way are still occasionally made.

Tannin.—Although tannin (and tannic acid) is one of the bodies most desirable to remove from juices, the bulky precipitate that is formed by the action of lime, etc., has led to the idea that plant extracts containing tannin afforded a purification of the cane juices to which they were added. The idea has been put into practice from very early days, and is still employed by the ryots of British India in their domestic processes. Its use forms the subjects of patents issued to Stokes (5555, 1827) and to Watson (7124, 1836).

Baryta.—Although essentially similar to lime in action, baryta precipitates sulphates and some other bodies not thrown out by lime, and for this reason its use has been advised. Questions of cost, however, render its use in the quantities required impossible. In white sugar manufacture baryta is, however, sometimes used on syrups where the bulky precipitate formed is believed to carry down iron as ferric hydrate.

Ferrocyanide.—Iron present as a ferrous salt may be quantitatively precipitated by potassium ferrocyanide and removed by filtration. If allowed to remain suspended, the white compound formed is oxidized to Prussian blue. This reaction is employed on syrups in white sugar manufacture, the salt being used in quantities of about 1 oz. per ton of syrup, which is enough to precipitate the very small quantities of iron present.

Potash Removal.—The removal of potash from juices has been attempted in many ways. In chronological order the proposals are :—Kessler, French patent 58613, 1862 ; Marix, French patent 82562, 1868 ; Tamin, patent 3151 of 1873 ; Hlavati, 15274 of 1903, precipitation as fluosilicates ; Duncan and Newlands, 2090 of 1871, precipitation as tartrate ; Duncan, 1989 of 1874, precipitation as a potash alum ; Gill and Gill, 3333 of 1874, precipitation as oxalate ; Gans, 8232 of 1907, substitution of potash by lime obtained by filtering through an artificial zeolite, with subsequent recovery of the potash by washing. Of these proposals the recovery as an alum was successfully worked for a number of years in a London refinery.

Electrical Processes.—Though the passage of a current does afford a coagulation of the colloids, the same effect can be obtained in a better and cheaper way by the action of heat and lime. Various proposals and processes depend for their effect, not on the passage of the current, but on the solution of the heavy metal forming an electrode. Other proposals of this nature have all the appearance of being frauds, and the secrecy attached to them does not invite confidence.

Heavy Metals.—Nearly all the heavy metals form bulky precipitates with cane juices. This is especially the case with basic lead salts, the use of which and their subsequent removal as phosphates formed the subject of a patent issued to Gwynne and Young (7231, 1836). Later Scoffern's proposal (patent 11991, 1847) to use lead and eliminate it as sulphite enjoyed a brief period of notoriety. It was used in a London refinery under the supervision of Daniell, and also in Spain and the West Indies. Authority finally intervened to stop its use. The use of tin salts was patented by Nash (366 of 1852), and of zinc by Terry and Parker (6442, 1833).

The Use of Vegetable Carbons.—About 1910 certain preparations consisting essentially of finely divided carbon appeared on the market, the object of their production being the decolorization of sugar materials. Great mystery, extravagant claims, and exorbitant prices were attached to these preparations, which, however, may become of great value to the industry.

A certain amount of research work has been done on these materials, and an abstract of the present state of knowledge is appended :

Preparation.—A charcoal prepared by carbonizing wood at a low temperature will be found to have little if any adsorptive properties. It may, however, be activated. This activation may be effected by heating in the presence (but not with active circulation) of air at temperatures variously stated, but probably about 400° C. The heating may also be done in the presence of superheated steam at temperatures up to 800--1,000° C. If the carbonaceous material be impregnated with various materials, lime, the chlorides of zinc, calcium and magnesium, soda, sulphuric acid, and be carbonized at a low temperature, a very active carbon results after the removal of the impregnating material by leaching or distillation.

Certain materials, such as rice hulls, rich in silica, afford an active carbon after removal of the silica by boiling with caustic soda. The theory of these preparations is thus given by Lamb, Wilson and Chaney.[7] Amorphous carbon exists in two forms, called primary and secondary; primary carbon is formed at lower temperatures, and may be activated. Secondary carbon formed at higher temperatures is graphitic in nature and cannot be activated. When charcoal is obtained as usually burnt, the hydrocarbons formed in the operation are adsorbed, and an inactive carbon results. Activation consists in removing these hydrocarbons. This removal is effected by heating, and is partly a process of distillation, and partly a process of oxidation. At the same time the charcoal itself is oxidized on the surface of the already existing capillaries, whereby the effective area becomes increased. The art of the process lies in careful control of the temperature, which if too low fails to remove the hydrocarbons, and if too high causes the formation of the secondary or graphitic type of carbon. Possibly also the hydrocarbons may break down at higher temperatures and deposit a layer of inactive material on the surface of the charcoal. All of the impregnating materials used are dehydrating agents, and they have the property of rendering as charcoal nearly all the carbon present in the wood or other material. Hydrocarbons are therefore not formed, and on removal of the impregnating material an active charcoal results. A secondary action may be that they penetrate into the material and on removal add to the surface area. Their influence may also be catalytic. Our present knowledge of the action of these bodies on sugar materials is mainly due to Schneller,[8] Zerban[9] and Bradley.[10] The very detailed experiments of the last named are given in abstract below.

All experiments were made with "Norit" on solutions of Barbados or Mozambique raws. Five per cent. on dry weight was used on 50 per cent. sugar solutions, unless otherwise indicated.

Effect of Size of Particles.—Norit was fractionated according to size of particles by bolting through silk sieves.

Mesh per lineal inch.	Percentage of material retained on sieve.	Percentage of colour removed.	Relative speed of filtration.
20	0·45	Muddy	—
28	0·41	Do.	72
38	0·45	29·1	—
48	4·64	41·5	34
60	7·30	65·0	28
72	12·80	76·2	18
84	7·61	80·0	—
94	6·96	80·0	7
106	6·43	81·0	4·5
124	46·0	81·6	4·5
Original	—	71·8	6

Effect of Quantity.

Per cent. of Norit.	Per cent. colour removed.	Per cent. of Norit.	Per cent. colour removed.
0·5	36·5	4·0	85·5
1·0	62·5	4·5	86·0
1·5	70·0	5·0	86·2
2·0	75·4	5·5	87·0
2·5	79·0	6·0	87·0
3·0	82·7	6·5	87·8
3·5	84·5	7·0	88·0

The filtrate became bright with 3·0 per cent. of Norit.

Effect of Temperature.

Temp. C.°	Per cent. colour removed.	Temp. C.°	Per cent. colour removed.
20	54·6	70	70·1
30	60·8	80	71·1
40	64·5	90	71·6
50	67·2	100	71·9
60	69·7		

Effect of Duration of Contact.

Time, mins.	Per cent. colour removed.	Time, mins.	Per cent. colour removed.
0	78·2	35	81·0
5	78·4	40	81·7
10	78·9	45	81·9
15	79·4	50	82·3
20	80·0	55	82·9
25	80·5	60	83·5
30	80·7		

Effect of Reaction.

Acidity c.c. normal.		Acidity c.c. normal.	
H_2SO_4 per 100 c.c.	Per cent. colour removed.	H_2SO_4 per 100 c.c.	Per cent. colour removed.
0	76·2	0·25	83·4
0·025	77·1	0·30	84·8
0·05	78·0	0·4	87·1
0·10	79·4	0·50	89·6
0·15	80·8	0·75	92·6
0·20	82·1	1·00	95·0

The influence of the particular acid used to obtain acidity was found to be negligible. The indicator used in this experiment is not specified.

Zerban[11] has, too, recently operated on large-scale experiments with Norit in combination with kieselguhr, and in the absence of lime treatment. He obtained normal working, and observed very great adsorption of pectins (alcoholic precipitate) and very small adsorption of ash.

These vegetable carbons are recommended for use in quantity greater than necessary for decolorization, the material being used repeatedly until ineffective, when revivification is necessary. The quantity stated to be used is 5 per cent. on dry substance, used ten times in succession. Partial revivification is effected by washing with sodium carbonate, but eventually a heat treatment is required.

These carbons have not yet come into standard practice. They have been used to some extent in refineries in Scotland, Holland and Portugal, by some confectioners on a minor scale, and in isolated cases in raw sugar houses in Java and Mozambique and Louisiana. A material due to Peck and Lyon, and prepared by the action of sulphuric acid on molasses absorbed by kieselguhr, is also in use in at least one house in Hawaii.

Other Agents.—In addition to those already quoted may be mentioned hypochlorites, chlorine, ozone. Von Lippmann[12] has made a complete collation of all the proposals which may most conveniently be read in the fifth edition of Spencer's "Handbook for Cane Sugar Manufacturers." Other than those mentioned above, none is of importance.

REFERENCES IN CHAPTER XVI.

1. La. Ex. Sta., Bull. 157.
2. "Practical White Sugar Manufacture," London, 1915.
3. *Jour. de Phys.*, 1810, 71, 455.
4. *Ann. Chim. Phys.*, 1849, 27, 273.
5. *La. Ex. Sta.*, Bull. 91.
6. *S.C.*, 1897, 29, 346.
7. *Jour. Ind. Eng. Chem.*, 1919, 11, 157.
8. *Int. Sug. Jour.*, 1918, 20, 191.
9. *Int. Sug. Jour.*, 1918, 20, 309.
10. *Jour. Soc. Chem. Ind.*, 1919, 38, 396 T.
11. La. Bull. 173.
12. *Deut. Zuckerind.*, 1909, 34, 9.

CHAPTER XVII

FILTRATION

THE importance of filtration in a raw sugar factory depends on the class of sugar made. When 96° test crystals form the output, filtration is usually confined to the scums formed on defecation, and it is only exceptionally that the juices themselves are filtered. When, however, white sugars are made by a combined defecation and sulphitation process, filtration is of importance since the appearance of the sugar largely determines its market value, and bright sugars can only be made from a transparent juice free from suspended matter; in fact, this feature is of equal importance with the colour of the syrups. In the carbonation process, also, filtration becomes of importance because of the very large quantity of material that has to be filtered.

Routines followed in Defecation Processes.—The heated and limed juice is allowed to settle in tanks, whence the clear juice is decanted, leaving from 10 to 15 per cent. of the whole volume of the juice as a mud. The mud may be :—

(*a*) Pumped direct to the presses, where it may or may not be washed.

(*b*) The mud is run to resettling tanks, diluted with water, blown up with live steam and sent to the presses.

(*c*) The method in *b* may be systematized so as to economize water by using the filtrate from the presses to dilute the original mud, which, after blowing up, is allowed to settle. The clear dilute juice drawn off is sent to the evaporators, the mud being then diluted with water, blown up and sent to the presses.

(*d*) When the mud is washed in the presses the dilute juice may be economically used to dilute the original mud.

(*e*) After one pressing the mud may be dropped from the presses unwashed, pugged in a mixer with water, and pressed a second time. As in the other routines, economy may be effected by using the second filtrate to dilute the original mud.

(*f*) In combination with any of the above schemes the decanted juice may be filtered through leaf filters, through sand, " excelsior," bagasse or other similar material.

(*g*) The whole juice may be filtered *en masse* through plate and frame presses.

Of all these schemes decantation combined with scum filtration in plate and frame presses with washing in the press combined with the systematized use of the dilute washings is to be preferred. With certain juices washing of the scums is a very slow process, and in such cases double filtration is preferable.

The filtration of the juice in bulk can only be satisfactorily performed with juices of high purity, and even then it is probable that more lime than necessary to effect defecation must be used.

Filtration of the clear decanted juice is supererogatory when making 96° test sugars since the small amount of suspended matter present in well defecated juice is immaterial with this type of sugar.

Routines followed in Carbonation Processes.—No choice exists here. The whole mass of the juice is filtered in plate and frame presses after both first and second carbonation. The filtration is followed by washing as these materials offer no obstacle thereto.

Routines followed in Sulphitation Processes.—Any of the schemes mentioned under defecation may be followed. As brightness is now of value, the filtration of the decanted juice occupies a position of importance. In place of this operation it is, however, more common and rational to filter the syrup after it leaves the evaporator and to thus remove also in one operation the material separated on concentration.

Treatment of Scums before Filtration.—The rate of filtration of scums is much greater when they are limed to distinct alkalinity as indicated by phenolphthalein than when they are neutral. Also the rate is increased when the scums are actually boiled for a very short time, and both these treatments are common. The admixture of the very alkaline filtrate with the bulk of neutral juice is, however, not advisable. Means to eliminate this trouble and yet to employ a distinct alkalinity are indicated in the chapter on Defecation. A third treatment which is used to a certain extent is the admixture of kieselguhr or diatomaceous earth with the scums. Although the advantageous action of this material is easily demonstrable, it is not extensively used in the cane sugar industry, the effects not being commensurate with the expense of obtaining the material, except in special cases.

Filtering Media.—In nearly every case the medium through which filtration takes place is a stout, closely woven cotton cloth. This material is used to form the filtering surface in bag filters, leaf filters and in presses. Very lately, however, a woven metallic cloth has been put into use. Other materials that are employed in special forms of filters are coke, gravel, sand, sawdust, wood shavings and bagasse. All of these materials can, however, only be used to remove a very small quantity of suspended matter from juices that are very nearly clear.

Principles involved in Filtration.—The variables to be considered in filtration are the pressure under which filtration occurs, the thickness of the cake through which the filtrate has to pass, the viscosity of the liquid and the size of the solid particles. When the last two factors were constant Almy and Lewis[1] found that with the pressure also constant $R = \frac{K}{V^n}$ where R is the rate of flow, V is the volume of the filtrate, and K is a constant; evidently at any moment V is proportional to the thickness of the cake. With pressure varying they found that the relation $R = \frac{KP^m}{V^n}$ held.

They point out that filtration may be considered as a flow through a capillary tube, the equation for which is $C = \frac{\pi r^4 P}{\delta \mu l}$ where r is the radius of the tube, P is the pressure, l is the length of the tube, and μ is the viscosity.* In their experiments the exponent of P was found to be less than unity, and they explain this as due to a closer packing of the solid particles with increase of pressure. They also showed that the rate of flow is also proportional to the viscosity precisely as happens in a capillary tube.

In the experiments quoted above the material used was chromic hydrate precipitated by glucose, and, although there do not appear to be any experiments on record dealing with cane juice precipitates, there is no reason to believe that similar expressions will not hold. Nothing can be said of the value of the exponents except that from mill to mill the variation will be large.

The viscosity of all sugar products decreases very rapidly with rise in temperature, and hence all filtrations should be carried out at as high a temperature as is possible. This is especially the case with syrups. The following rates of filtration were observed by Brendel[2] with beet syrups.

Temperature C°.	Flow per minute.	Temperature C°.	Flow per minute.
2·3	3·1	40	66·8
8	9·7	47	91·2
21	22·0	60	146·8
30	37·3		

Development of the Practice of Filtration.—Filtration as an art may be said to have been established by the invention of the stocking or bag filter by Cleland (patent 4949, 1824). This was improved by Taylor a few years later, and his name is connected therewith to the exclusion of that of the original inventor. The filter-press was originally invented as a means of simultaneously *pressing* and filtering oil seeds and is contained in Needham's patent (1669 of 1853). This was developed into a chamber press, with special reference to sugar juices by Needham and Kite (patent 1288 of 1856), and by Needham, Kite and Finzel (patent 1083 of 1856). Its functions and applicability were greatly improved by Jacquier and Danêk, whose patent (2101 of 1864) introduces the continuous internal conduit, the plate and frame arrangement and washing out through the cake. A second important patent is that of Dehne (1957 of 1878), which shows separate conduits for juice and for water and locates them in lugs cast at the angles of the plates. This patent shows a plate chamber press. The leaf-filter is due to an American refiner, Lovering, before 1845.[3] These filters are commonly called "Danêks," the type having been patented by Danêk (15322 of 1887). From this time their use became general. A patent (376 of 1878) issued to Danchell hardly differs, however, from that granted to Danêk nine years later.

The use of materials, such as sand, coke, etc., is claimed in a patent (9574, 1842), issued to Crossley and Stevens, and these materials figure in a number of subsequent patents. The use of sand in the European beet sugar industry is generally credited to Mayer, who introduced it about 1878. The later patents, of which those issued to Kostalek (9331, of 1902) and to Abraham (27629 of 1902), *Fig.* 181, are examples, deal with special forms of filters only.

The use of kieselguhr or diatomaceous earth is claimed in a patent issued to Heddle, Glen and Stewart (3116 of 1886), and in the same year Wiechmann

---

* This equation is further discussed in the chapter on *Centrifugals*

was granted a patent in America (343287). Soxhlet, to whom the credit for the introduction of this material is generally given, took out a patent much later (21217 of 1892). Casamajor's proposal to use sawdust is contained in patent 257 of 1883.

Filtration through fine wire gauze is claimed in a patent (11312, 1846), and again much later by Robertson and Watson (patent 974 of 1873).

Filtration under centrifugal force through flannel is claimed in Bessemer's patent (13202, 1850).

The Bag or Stocking Filter.—The bag filter of Cleland (patent 4949, 1824), usually known as the Taylor filter, consists of a sheath of strong woven material, one end of which is closed by tying. The other end is secured to the wide end of a hollow metal cone. Inside the sheath may be placed a second wide bag turned upon itself several times, and which forms the filtering material, the outer sheath in this case merely serving to support the inner one. This method is described in Schroeder's patent (8675, 1840). The narrow ends of the cones are secured in a horizontal frame, the whole system of frame and bags being contained in a rectangular iron casing. The usual length of the bags is six feet. The sides of the chamber project above the frame on which the bags are carried and thus form a reservoir, into which is run the material to be filtered. Generally filtration takes place under gravity only, but pressure types have been used, the pressure being obtained either by forming a vacuum in the chamber or by causing an air pressure on the surface of the liquid. The bag filter survives only occasionally in the cane sugar industry.

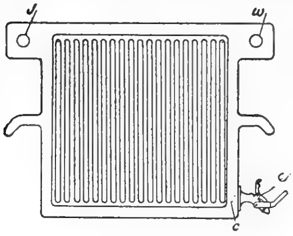

FIG. 174

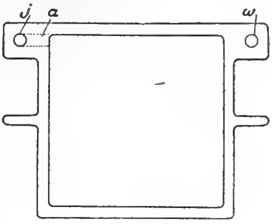

FIG. 175

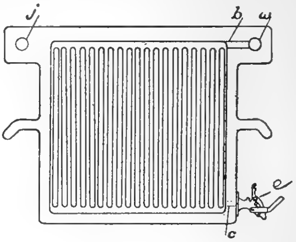

FIG. 176

The Chamber Press.—The chamber press is found in two forms, the plate and frame press, and the plate press. The form described below is an angle feed washout plate and frame press. *Fig.* 175 shows an elevation of the frame. It is formed of a skeleton of square shape, and is up to 1½ inches in thickness. The thickness of the frame determines the thickness of the cake of material, and this is in turn determined by the nature of the precipitate to be filtered off. At horizontally opposite corners are arranged the lugs or ears, in which are formed transverse openings *j* and *w*, the upper one of which communicates by a channel, *a*, with the space bounded by the inner surfaces of the frame. *Fig.* 174 is an elevation of one of the two kinds of plates called the juice plate. It is a casting of over-all dimensions corresponding to those of the frame and with transverse openings *j* and *w* registering with those of the frame; neither of these openings communicates with the interior of the press. The other plate, *Fig.* 176, is called the water plate, and is similar to the juice plate except that the transverse openings *w* communicate by a channel, *b*, with the interior of the press. Between the plates and the frames are stretched the filter-cloths; and both sides of the plates are ribbed or channelled or formed with a system of pyramids on their surface, to afford rapid drainage of the liquid that passes through the cloths.

On both juice and water plates are located cocks communicating with the interior of the press by the channels *c*. The stems of these cocks may be of unequal height, so that one cock may be closed while the adjacent ones are open, or the flap closure shown in *Figs*. 174 and 176 may be used. The assembled press is shown in *Fig*. 177, piping connections being omitted. The press is set up in the order: filter head, frame, juice plate, frame, water plate, frame, juice plate, etc. The frames are indicated by two dots, the juice plates by three dots, and the water plates by one dot.

Dirty juice is admitted under pressure to the openings *j* (see *Figs*. 174, 175 and 176), and passes into the frames by the channels *a*. The cloths catch the suspended matter, and the clear filtrate which passes through the cloth runs out by the channels *c* and the cocks *e* into the gutter *f*, *Fig*. 177.

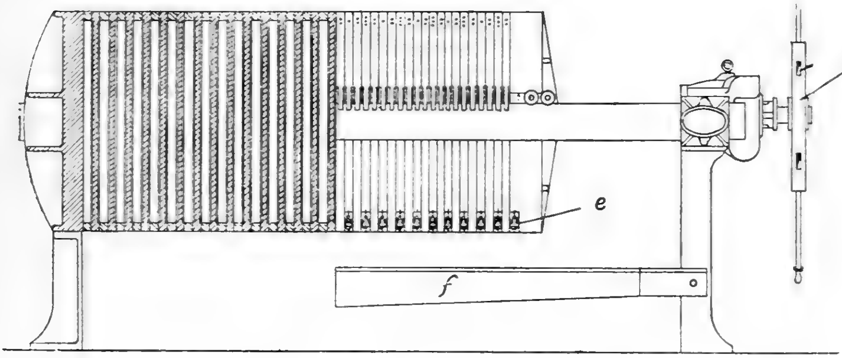

FIG. 177

When the frames are filled with the intercepted matter washing begins. Water is admitted to the conduit formed by the transverse openings *w*, and at the same time the cocks on the water plates are closed. In order to escape, the water has to pass through the wall of cake and out through the cock on the juice plate. The plates are pressed together by means of the gear *h*, and in some designs hydraulic closure is used. Rubber rings inserted in the transverse openings make a tight joint, and these may be replaced by cloth pockets, in which are cut holes registering with the openings in the lugs. The gutter which receives the juice should be provided with three exits, one each for dirty juice, clear juice and washings.

In the plate chamber press the chamber is formed in the space confined by the juxtaposition of two plates. The plates are made with thickened edges, the thickness of the edge determining the thickness of the cake. The form peculiarly associated with the Dehne press is shown in *Figs*. 178 and 180, which represent respectively the water plate and the juice plate. *Fig*. 179 shows six plates as assembled in a press, the odd-numbered plates being the water plates. The dirty juice conduit is central to the plates, the cloths being locked to the plates by a male and female screw combination passing through the central hole. The water conduit is shown at *w*, and the washing exit at *a*, in an upper corner of the plate. In this type cocks are not provided for the escape of the dilute juice from each alternate plate, but the conduit formed by the transverse openings is controlled at one end by a valve discharging into a gutter. At *b* are openings similarly controlled, which admit of the escape of the air. The assembled press is arranged similarly to the plate and frame press, the method of washing being the same.

The Leaf Filter.—The Philippe type of leaf filter is indicated in perspective in *Plate* XXV. It consists essentially of a rectangular box with double inclined bottom. Arranged near the top of the box is a horizontal frame, in which are supported a number, usually about twenty to thirty, rectangular wire or pressed steel frames or baskets. These frames are covered with cloth pockets, which make a tight joint with the horizontal frame. The cover of the box is a hinged lid, which carries a number of cocks, one for each basket. The lid on closing makes a tight joint with each filtering element. Dirty juice admitted to the box by the pipe passes to the interior of the baskets, the solid matter being caught on the cloths. When filtration ceases the dirty liquor remaining in the box can be discharged by a cock

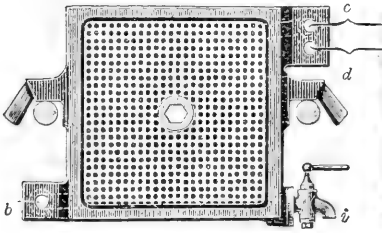

FIG. 178

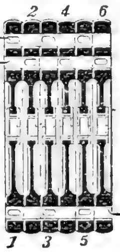

FIG. 179

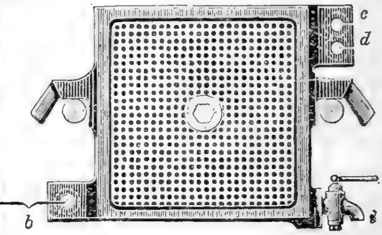

FIG. 180

These presses are made in a great variety of shapes. Instead of being rectangular the elements in some designs are cylinders, and many variations are possible without altering the principle. By European makers the frames are regularly made 0·7 metre square, thus giving a filtering area of nearly one square metre per element. They are operated under a head of liquid up to eight feet.

Kelly Press.—The Kelly press, *Plate* XXV (U.S. patent 864308, 1907) is a leaf filter designed for the pressure filtration of scums. It consists of a cylinder mounted on an inclined frame. The filtering elements are made up of wire frames covered with cloth, and are usually spaced four inches apart; they are supported on a travelling carriage mounted on wheels. Each element has an individual outlet. Washing of the cloths and discharge of the cake is effected after running the whole filtering system down the runway. The cloths are washed by the impact of a jet of water. But one joint is ever required to be made. This press is very largely used in the American beet sugar industry.

Sweetland Press.—The Sweetland press, *Plate* XXVI (U.S. patents 885398 and 887285, 1908), is another type of leaf filter. Its peculiarity lies in the " clam shell " arrangement, whereby the press is opened, allowing

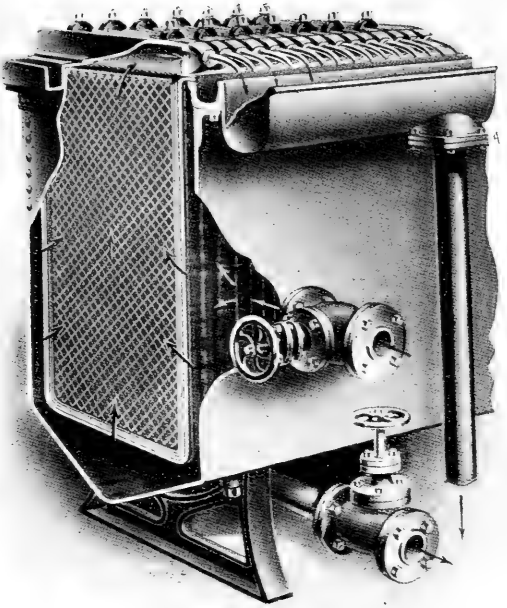

THE PHILIPPE FILTER.

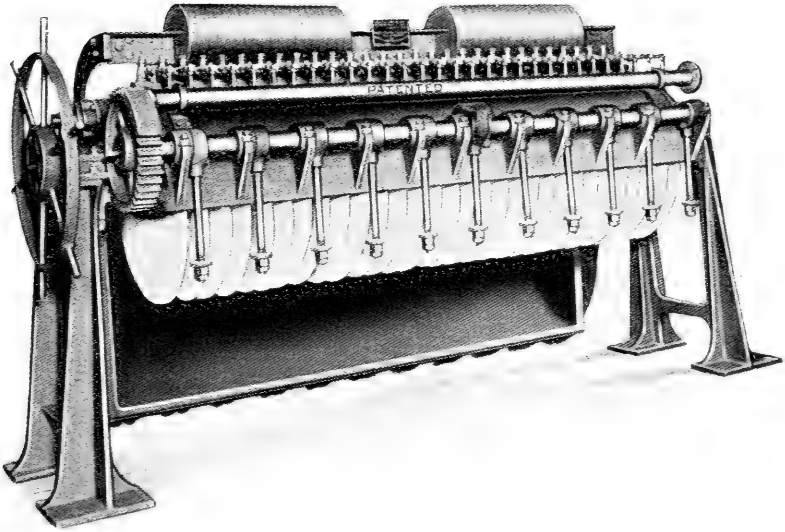

THE SWEETLAND LEAF FILTER

PLATE XXVI.

THE KELLY FILTER PRESS.

the cakes to be discharged and the cloths to be washed. As in the Kelly press, only one joint is to be made. The filtering elements are formed of wire frames covered with cloth. It also is widely used in American beet sugar practice. The advantages of the two presses lie in their labour-saving opportunities. They do not add any new principle to the art of filtration.

Sand Filters.—Of the various types of sand filter, that due to Abraham (patent 27629 of 1902), shown in *Fig.* 181, has been most used in the cane sugar industry. The filtering elements consist of a number of conical iron rings, *a*, piled vertically on one another and concentric with an upright vertical cylinder, *b*. The sand fills the spaces between the rings and around the cylinder. The material to be filtered enters at *c*, passes through the sand and is withdrawn at *d*. The sand when foul is discharged through a door and washed in running water, which carries off the intercepted matter.

Bagasse Filters.—A bagasse filter usually consists of a vertical cylinder, through which the juice flows from below upwards. The bagasse used is generally that from the second mill, that from the others being either too coarse or too fine. Bagasse filters have the advantage of eliminating washing, since the bagasse when foul is merely thrown on to the bagasse carrier of the mill and crushed with the rest of the material.

Wire Gauze Filters.—The appliance usually used consists of a cylindrical rotating screen, set about 10 degrees from the horizontal. The juice is introduced at the higher end and escapes through the perforations. The fine suspended matter is caught and carried forward by the rotation of the cylinder. The gauze used contains about 10,000 perforations per square inch, each being about 0·005 inch in diameter.

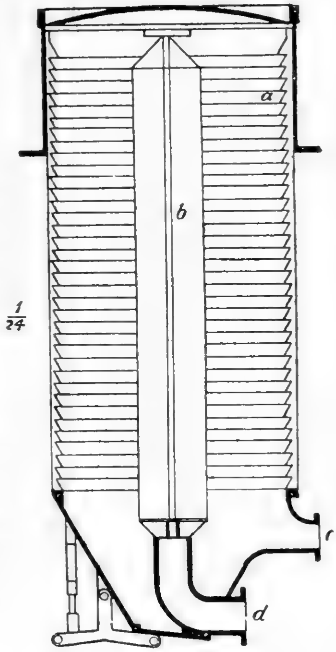

Fig. 181

Manipulation of Filter-Presses.—Filter-presses for scums and first carbonated juices are usually worked at a pressure of about 40 lbs. per sq. in., the pressure being obtained from a montjus or pump. The montjus, *Fig.* 182, which is a French invention introduced in 1819, consists of a cylindrical vertical or horizontal tank, *a*. It is filled with the material to be filtered through the funnel, *b*, and steam or compressed air passing through the valve *c* is allowed to act on the surface of the liquid, causing the material to ascend through the pipe *d*. The pumps employed may be plunger or centrifugal pumps. The former are often fitted with an appliance whereby the steam is throttled when the pressure exceeds a certain limit. A very convenient arrangement is as follows. The dirty juice is delivered from one centrifugal pump to a tank, in which is maintained a pressure of 20 lbs. per sq. in. The presses are filled from this tank. A second pump draws from this tank, and, when the rate of filtration slows down, completes the filling at a pressure of 40 lbs. per sq. in. The washing is effected by a third centrifugal pump at a pressure of 60 lbs. per sq. in.

In filtering decanted juices and second carbonation juices and syrups through either a leaf filter or a chamber press, it is not usual to employ a pump. Better results are obtained when the filtration takes place under a head of about ten feet.

In order to preserve the expensive heavy cloth, beet sugar practice places over this a very thin inexpensive cloth, which may be frequently renewed at a net saving in expenditure.

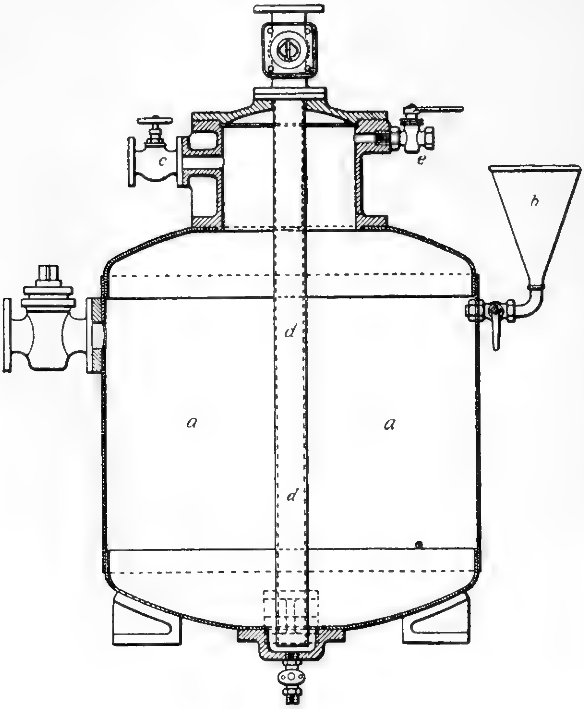

Fig. 182

Capacity of Filters.—There is so much variation in the rate at which cane products filter, and so much variation in the demands made by different houses on this station that it is impossible to give anything more than a very rough statement, which is referred to a weight of juice equal to that of the cane.

Defecation.—With juice equal to cane, scums 10 per cent. on the volume of the juice and dry matter in the scums 0·3 to 0·4 per cent. on cane, a filtering area of 65 sq. ft. per ton-cane-hour will be sufficient, provided no washing is required. This figure is to be considered a minimum, and 80 sq. ft. per ton-cane-hour would be a better allowance. When washing of the cake is required, from 100 to 120 sq. ft. per ton-cane-hour should be allowed. The same figure will serve when double pressing is followed, since the second pressing is much more rapid than the first. When the whole volume of the juice is to be filtered *en masse*, about 150 sq. ft. per ton-cane-hour is required, with proportionate increase if washing is to be followed.

Carbonation.—For first carbonated juice there will be required from 100 to 120 sq. ft. per ton-cane-hour, and for the second from 40 to 50 sq. ft., whether in this case leaf presses or plate and frame presses are used. These quantities seem very small when the greatly increased bulk of the solid matter compared with that obtained in defecation is considered, but the filtration is so much more rapid that the increase is not proportionate thereto. With De Haan's scheme the area required on first filtration falls to 80 sq. ft. per ton-cane-hour.

Leaf Filters.—When used on well settled cane juice in a defecation process, from 30 to 40 sq. ft. per ton-cane-hour.

Syrup Filtration.—In both leaf and plate and frame presses there are required from 30 to 40 sq. ft. per ton-cane-hour.

Bagasse Filters.—There will be required a volume of about 10 cu. ft. per ton-cane-hour.

Loss of Sugar in Press Cake.—The weight of the press cake usually lies between 1·25 and 1·75 on 100 cane. Of this about 25 per cent. is insoluble and 75 per cent. is water and soluble. With juice 100 per cent. on cane, unwashed cake and undiluted scums, the loss will be from 1 to 1·5 per cent. of the sugar in the juice. In most Hawaiian factories this loss is reduced to less than 0·25 per cent. by dilution washing or double pressing. In Java, Cuba and other districts a much higher loss is common. In factories following the carbonation process where the weight of the cake is much greater, washing is essential to prevent a very notable loss.

Composition of Press Cake.—Press cake consists of the suspended mechanical impurities, *i.e.*, cane fibre, sand, soil, etc., the coagulated colloids, including cane wax and albuminoids, and phosphate of lime, as well as other bodies. The percentage composition will vary greatly, and will be connected with the milling practice, with the perforations in the mill strainers, with the variety of the cane, and with the degree of exhaustion of the cake. Referred to dry insoluble matter, or to the cake proper, the proportions will lie within the following limits :—Fibre, 30–40 per cent. ; soil, 10–15 per cent. ; cane wax, 20–30 per cent. ; albuminoids, 10–15 per cent. ; calcium phosphate, 10–15 per cent. Well pressed cake, firm and dry to the touch, contains from 60 to 70 per cent. of water, while the sugar in the cake will vary from 12 to 1 per cent., dependent on the composition of the juice and the degree of exhaustion followed.

REFERENCES IN CHAPTER XVII.

1. *Jour. Ind. Eng. Chem.*, 1912, 4, 528.
2. "Beet Sugar Manufacture," New York, 1905.
3. U.S. Senatorial Document, No. 50, 1845.

CHAPTER XVIII

EVAPORATION

AFTER the processes of defecation and filtration have been completed, there results a more or less clear juice, varying in quantity from 80 to 120 per cent. of the weight of the cane. This juice contains from 13 to 20 per cent. solid matter, of which 70 to 90 per cent. is cane sugar. In order to obtain the sugar as crystals the greater part of the water has to be removed. Its removal is effected in two stages: the first is referred to as *evaporation*, the second as *boiling* or *graining*. There is, however, no fundamental reason why these stages should not be continuous; their discontinuity is due to the nature of the operations involved.

In the first stage the concentration is carried on until the percentage of solids has reached not less than 50 per cent., and it may reach 70 per cent.; the variation depends on the capacity of the evaporators, the caprice of the superintendent, and the purity of the juice. The process is conducted under a system of multiple effect evaporation, whereby one unit of steam may evaporate n units of water, where n may be very great. The extreme limit in practice is reached with an eight-fold evaporation; the apparatus in common use are of triple, quadruple, or quintuple effect. The evaporator may be operated as an independent unit, or it may be worked in combination with the juice heaters or the graining pans. The first-named combination will be referred to as an isolated system, and the second as a connected system.

In this chapter an attempt is made to bring together an account of the elementary principles involved, of the chief types of apparatus used (together with their essential accessories), of the different systems and combinations, with their bearing on the general economy of the factory as a whole.

Boiling Points.—All liquids continually give off to the surrounding atmosphere a part of their substance in the form of vapour, which exerts a definite pressure known as the vapour pressure. For every temperature there is a corresponding vapour pressure, which increases with the temperature. When this pressure becomes equal to the pressure of the surrounding atmosphere, vapour is given off freely from all points of the liquid, and the latter is said to boil, the temperature at which this occurs being called the *boiling point* at that particular pressure. When no qualification is applied to the boiling point, the pressure is taken to be the normal atmospheric pressure; this is 14·707 lbs. per sq. in.; 1·034 kilos per sq. cm., or that exerted by a column of mercury 29·92 ins. or 76·0 cm. high. It is common practice to refer to pressures less than atmospheric in terms of *vacuum*; thus an absolute vacuum would be referred to as 29·92 inches of vacuum, and a liquid boiling under a vacuum of 25 inches boils under a pressure of

4·92 inches of mercury, or 2·42 lbs. per sq. in., provided that the atmospheric pressure is 29·92 ins. Conversely, when ebullition occurs at pressures above atmospheric the liquid is said to boil under pressure, such pressures being usually reckoned from the normal atmospheric pressure as zero. Thus, steam at 30 lbs. pressure or 30 lbs. gauge means that the pressure is 30 lbs. per sq. in. above that, due to the atmosphere, corresponding to an absolute pressure of 44·707 lbs. per sq. in. At the end of this chapter will be found a table connecting the boiling points of water with the pressure under which ebullition occurs.

The boiling point of a solvent is elevated by the presence of solids in solution. For non-electrolytes, as sugar, and in dilute solutions generally the elevation is proportional to the quantity of material in solution in unit volume, and molecular weights of different non-electrolytes give the same elevation of the boiling point. This elevation of the boiling point is independent of the pressure under which ebullition occurs. In the annexed table the values from 10 to 70 per cent. are due to Gerlach, the balance being after Claassen.*

TABLE GIVING THE BOILING POINT OF SUGAR SOLUTIONS.

Per cent. Sugar in solution.	Boiling point elevation, F°.	Per cent. Sugar in solution.	Boiling point elevation, F°.	Per cent. Sugar in solution.	Boiling point elevation, F°.
10	0·7	80·5	19·3	87·75	33·9
20	1·1	81·0	19·9	88·0	34·6
30	1·8	81·5	20·5	88·25	35·3
40	2·7	82·0	21·2	88·50	36·0
50	3·6	82·5	22·0	88·75	36·7
60	5·4	83·0	22·7	89·0	37·5
70	11·7	83·5	23·6	89·25	38·3
75	13·2	84·0	24·7	89·50	39·1
75·5	13·7	84·5	25·7	89·75	39·9
76	14·2	85·0	26·8	90·0	40·7
76·5	14·8	85·5	27·9	90·25	41·5
77	15·3	86·0	29·2	90·50	42·4
77·5	15·8	86·25	29·8	90·75	43·2
78	16·4	86·5	30·4	91·0	44·1
78·5	16·9	86·75	31·1	91·25	45·1
79	17·5	87·0	31·8	91·50	46·3
79·5	18·0	87·25	32·5	91·75	47·7
80	18·6	87·50	33·2	92·0	50·2

If the vapour from a liquid be mixed with the vapour from a second liquid, or with an *incondensible* gas, the pressure exerted is the sum of the individual pressures. Thus, if the pressure of water vapour in an enclosed space is found to be higher than that which corresponds to the temperature, the presence of air or other gas is indicated.

---

* The boiling points of sugar solutions were first given by Dutrône in 1790, and were determined by him as a guide to the operation of sugar boiling in the open train. Generally, the conduct of sugar boiling has not yet reached this degree of refinement.

A vapour, like any other body, may be heated, and a vapour heated above the temperature corresponding to its condensation point at that pressure is said to be superheated, or to have so many degrees of superheat. The condensation point of the vapour and boiling point of the liquid are, of course, the same.

Heat.—Heat is a definite measurable form of energy. The unit used in British and British-derived engineering practice is the British Thermal Unit (B.T.U.): this is the quantity of heat required to raise 1 lb. of water through 1° F. at a temperature of 62° F.* The metric unit is the calorie, based on the kilogram and degree Centigrade; it is hence 3·967 times as great as the B.T.U. Under this definition, to raise the temperature of water from 32° F. to 212° F. will require 180 B.T.U.; under atmospheric pressure water at this temperature will boil. To convert all the water to steam will require 969·7 B.T.U., and this quantity is said to be the *latent heat of steam* at 212° F. The sum of the latent heat of steam, and the quantity required to raise the temperature from 32° F. to 212° F. is called the total heat of steam. The latent heat of steam is not constant, but decreases with rise in temperature; the total heat of steam, however, shows an increase with temperature.

The quantity of heat in the same weight of different bodies at the same temperature is not the same. The ratio of the quantity of heat required to raise the temperature of a body 1° F., to the quantity of heat required to raise the temperature of the same weight of water 1° F., is called the *specific* heat, the value assigned to water being unity. The specific heat of a mixture is as computed arithmetically; thus the specific heat of a 10 per cent. solution of cane sugar is $0{\cdot}9 \times 1 + 0{\cdot}1 \times 0{\cdot}301 = 0{\cdot}9301$.

The Transference of Heat.—In a certain sense a sugar factory may be considered as a system for the transfer of heat, not only in evaporation, but also in the following departments:—Generation of steam in the boilers, heating and evaporation of juices and syrups, cooling of juices on settling, cooling of injection water, cooling of massecuites, drying of sugars. The subject of heat transference will therefore be discussed in some detail.

Heat may be transferred from a hot body to a colder body by conduction, radiation, or convection. By the last term is meant the currents set up in a fluid, when one portion changes in density owing to change in temperature; an intimate mixture follows, so that transference by convection is merely a special case of conduction. These means may act independently or in conjunction, some specialized examples being given below:—1. The hot body is separated from the cold body by a partition (boilers, juice heaters, and evaporators generally). 2. The hot body is in direct contact with the cold body (injection water in condenser, cooling tower). 3. The transfer takes place solely by conduction (surface condensers, water-jacketed crystallizers). 4. Transfer takes place by combined conduction and radiation (steam boiler, loss of heat in steam pipes). 5. The hot body is a gas (steam boiler), a liquid (massecuite), a condensing vapour (steam in evaporator); and conversely the cold body is a gas (air and steam pipes), or a liquid (juice in evaporator). 6. The hot and cold bodies may mutually change

---

* The variation referred to any other temperature is very small, and for engineering practice may be neglected.

in temperature (water-jacketed crystallizer), one may change (the hot body in a steam boiler and the cold body in a juice heater), or both may remain at uniform temperature (condensing vapour and boiling liquid in evaporators and vacuum pans).

The passage of heat by conduction through a partition is controlled by the following circumstances :—

1. *The mean temperature difference between the hot and the cold body.* If the hot and cold bodies do not change in temperature, as with condensing steam and boiling liquid, the mean temperature difference offers no difficulty in definition ; if, however, one or both temperatures vary, as with a hot liquid and a cold liquid, the mean temperature difference is given by the expression

$$(T_{max.} - T_{min.}) \div \left(log_e \frac{T_{max.}}{T_{min.}}\right)$$

where $T_{max.}$ and $T_{min.}$ are the greatest and the least temperature differences ($log_e = 2{\cdot}3025\ log_{10}$).

2. The resistance to the passage of heat from the hot body to the partition, through the partition, and from the partition to the cold body.

3. The rapidity of movement (or circulation) of the hot and cold bodies.

4. The area of the partition.

The influence of these factors is discussed below.

According to experimental observations, when the temperature differences are small and near to each other on the thermometric scale, and when the physical properties of the bodies on either side of the partition do not vary much with change of temperature, the rate of heat transfer is very nearly proportional to the temperature difference. Thus with a range of temperature, say from 200° F. to 220° F., with condensing steam on one side and juice of 15° Brix on the other, about twice as much heat will pass with steam at 218° F. and juice at 208° F. as with steam at 220° F. and juice at 215° F. ; but it does not follow that proportionality will obtain as between one system at 230° F. and another at 150° F., or when the temperature differences to be compared differ greatly in magnitude. It is, however, certain that as the position of the temperature difference rises in the absolute scale of temperature the rate of transfer also increases. This is very marked as between the first and last cells of a multiple effect evaporator, and is also in this case probably due to causes such as viscosity of the syrup, as well as to position in the scale.

The writer examined this point as regards the first and last cells of a vertical submerged tube quadruple effect apparatus, taking as the temperature differences the value $C_1 - J_1$ or $C_1 - C_2$ and $C_4 - VS_4$* ; the rate of heat transference was obtained by observing the time required to fill a tank with the water discharged from the first cell. If the rate of heat transference is proportional to the temperature difference, then $T\ (C_1 - C_2) =$ constant, where T is the time taken to fill the tank. Some results follow below, the temperature being in F.° and time in seconds. These experiments were made in a factory and not in an engineering laboratory.

---

* For the significance of these expressions see p. 321.

RATE OF EVAPORATION AS DETERMINED BY TEMPERATURE DIFFERENCE.

C_1	J_1	C_1-J_1	T	$T(C_1-J_1)$	C_1	C_2	C_1-C_2	T	$T(C_1-C_2)$
221·0	210·5	10·5	561	5850	230·7	220·3	10·4	453	4710
220·8	210·5	10·3	621	6396	226·9	216·8	10·1	495	4999
220·8	210·8	10·0	670	6700	223·3	213·6	9·7	525	5093
220·9	211·3	9·6	693	6653	220·1	210·8	8·3	562	4665
221·1	211·8	9·3	770	7161	216·0	209·7	6·3	711	4479
221·0	212·0	9·0	825	7425	212·4	207·5	4·9	915	4485

C_1	C_2	(C_1-C_2)	T	$T(C_1-C_2)$	C_4	VS_4	(C_4-VS_4)	T	$T(C_4-VS_4)$
220·1	210·7	9·4	568	5339	176·2	122·5	53·7	568	3049
220·1	211·0	9·1	599	5491	177·8	126·0	51·8	599	3103
220·0	211·2	8·8	640	5632	181·0	130·0	51·0	640	3264
219·9	211·4	8·5	692	5882	183·1	134·9	48·2	692	3336
220·0	211·5	8·5	701	5958	183·0	135·0	48·0	701	3365
219·8	211·7	8·1	754	6112	187·5	140·4	47·1	754	3552
220·1	212·2	7·9	772	6098	188·0	145·1	42·9	772	3311
220·1	212·4	7·7	835	6432	189·0	148·4	40·6	835	3390

When, however, the temperature differences are very great, and are located in different positions in the thermometric scale, a different law obtains. Rankine[1] assumed the difference was in proportion to the square of the temperature difference, as was later indicated by the experiments of Blechynden.[2]

The passage of heat through a partition takes place in three stages :—1. The passage from the hot fluid to the partition. 2. The passage through the partition. 3. The passage from the partition to the cold fluid.

Péclet's classical equation[3] representing these conditions is :—Let a, b, c be the coefficients of heat transfer at entry, through the partition, and at exit ; then if k be the quantity of heat transferred in unit time, through unit area with unit temperature difference, $\frac{1}{k}=\frac{1}{a}+\frac{1}{b}+\frac{1}{c}$ or $k=\dfrac{1}{\frac{1}{a}+\frac{1}{b}+\frac{1}{c}}$

Now suppose b is very large compared with a and c ; then it follows that $\frac{1}{b}$ will be very small, and the heat transferred will depend on the resistances at entry and at exit or to $\frac{1}{a}$ and $\frac{1}{c}$.

For evaporators this subject has been studied by Holborn and Dittenberger[4] and by Austin[5] ; using their results, Aulard[6] finds the following values for a, b, c in beet sugar juices in multiple effects :—

	Cell I	Cell II	Cell III	Cell IV
Conductance at entry $= a$	0·133	0·125	0·111	0·067
,, through partition $= b$	1	1	1	1
,, at exit $= c$	0·222	0·200	0·069	0·042

The above values for b refer to brass tubes : for the fourth cell the relative value of k is $\dfrac{1}{\dfrac{1}{0\cdot067}+\dfrac{1}{1}+\dfrac{1}{0\cdot042}} = 0\cdot0250$. If the partition be neglected altogether, the value of k is $\dfrac{1}{\dfrac{1}{0\cdot067}+\dfrac{1}{0\cdot042}} = 0\cdot0251$, so that the effect of the brass tube is barely appreciable. The relative conductivity of copper to brass is about 3 : 1, so that substituting copper for brass would only cause the value of k to rise to 0·0256. The conductivity of copper is not the reason for its use in evaporators and heat transference apparatus generally; the real reason lies in its resistance to corrosion, and possibly to some extent in conservatism. As regards the manufacture of white sugar there are in addition other grounds. Brass, which is frequently substituted for copper, has a conductivity substantially the same as that of iron or steel.

It is easy to see from the above equation that the transference of heat is governed by the low conductivity of any one element, and not by the high conductivities of the others; hence, if an evaporator is not kept clean, application of principles of heat transference and the skill of the designer are rendered null and void. A badly designed clean evaporator will operate more efficiently than a well-designed machine the tubes of which are allowed to become coated with a deposit of scale.

As regards velocity of steam flow, most engineers now seem inclined to revert to Osborne Reynolds' hypothesis,[7] namely, that the transmission coefficient is directly proportional to the product of density and velocity of the fluid, or to the weight passing per unit time and per unit area; experiments made by Jordan[8] with hot air and water confirm this hypothesis, and possibly the variations found between other experiments may be due to neglect of the precautions necessary to keep other controlling conditions constant.

Jordan states with regard to the passage of heat from air to water :—

(1) For a constant mass flow $\left(\dfrac{\text{weight per sec.}}{\text{area of passage}} = \text{constant}\right)$, the transmission coefficient is directly proportional to temperature difference.

(2) For a constant temperature difference, the transmission coefficient increases with the velocity under a lineal law.

(3) Other conditions being equal, the transmission coefficient increases with rise in the absolute scale of temperature.

(4) The transmission coefficient depends on the area of the passage and increases as the ratio, "area/circumference," decreases.

The effect of variation in the velocity of the liquid has been studied by a number of investigators who find the relation $K = C\,V^n$ where K is the transmission coefficient, V is the velocity of flow.

C is a constant, and n varies from zero to unity; when n is zero, velocity has no influence, and this condition might occur in the case of the presence of some other dominant factor, but generally n is given by different experimenters as one-half or one-third.

The latest and very detailed experiments of Orrok[9] give $K = 308\,V^{\frac{1}{3}}$, with V in foot-second units; this expression relates to design conditions for surface condensers referred to a 27-inch vacuum.

The presence of air in the steam decreases the value of a or the conductivity at entry. Orrok, referring to surface condensers used with steam turbines, expresses the relation thus: let P_s be the partial pressure due to the steam, and P_t be the total pressure; then the coefficient of transmission varies as $\left(\frac{P_s}{P_t}\right)^n$; to the exponent n, values varying from 2 to 5 have been assigned, Orrok's experiments pointing to the latter value.

In tubular condensers the length and the diameter of the tube have an influence on the transmission of heat, the generally accepted formula being $K = \frac{c}{\sqrt{d\,l}}$, where c is a constant and d and l are the diameter and length respectively. With decreasing diameter it is easy to see that the thickness of the wall of liquid through which heat has to be transmitted decreases; it is not so easy to realise what influence length will have. In vertical submerged tube evaporators, however, increase in length of tube increases the hydrostatic head or pressure under which the lower layers of liquid boil, and also increases the length of time taken for a drop of water to trickle down from the top to the bottom of the tube.

The passage of heat to the atmosphere from a steam pipe, a tank full of hot juice, an evaporator, pan, or juice heater, may be considered as a special case of the transfer of heat through a partition. In the case of a bare pipe the coefficients a and b in Péclet's equation may be considered as of the same order as those found in surface condensers. By the substitution of air for water or boiling juice the value of c is many times decreased, and when a non-conducting material is placed round the partition the value of b is also decreased. The question is complicated by the dissipation of heat being also due to radiation and convection, as well as conduction; in any case, however, the loss of heat cannot be greater than what can pass through the partition. In the case of a hot body separated from air by a partition, heat will pass through, and eventually, if there is no loss of heat, both sides of the partition will be at the same temperature and no more heat will pass. As soon as heat is lost by radiation and conduction, the temperature of the external side falls, and heat again begins to pass; this process will continue until the external side is at such a temperature that the heat which passes under the temperature difference is exactly balanced by that given off by radiation to and conduction by the air. The dominant factor controlling the loss of heat will be the final difference in temperature between the external side of the partition and the surrounding air; this in turn will be controlled by the conductivity of the partition, the temperature of and circulation in the air, and the nature of the external surface of the partition. The combined effect of all these influences, called the *exterior conductibility* or *surface emissivity* cannot be combined in one general formula, although a number of empirical formulæ have been suggested. For small and nearly related temperature differences the loss is directly proportional to the temperature difference, but the loss for mx degrees is more than m times the loss for x degrees when m is large, the proportionate difference increasing as m increases.

As the loss in steam pipes is partly controlled by the value of a in Péclet's equation, or conductibility between steam and partition, an explanation is afforded of the less loss found with superheated compared with saturated steam. Although the former is at a higher temperature, its conductibility is lower, and may more than counterbalance the effect of its higher temperature.

Conception of Multiple Effect Evaporation.—Heat may be quantitatively exchanged from one body to another, the heat always passing from that body with the higher temperature to that with the lower. If one pound of water at 80° F. be mixed with the same quantity at 60° F. there will result two pounds at 70° F.; similarly, if one pound of water at 80° F. be contained in a vessel, separated by a partition from a second pound of water at 60° F., eventually 10 B.T.U. will pass from the hotter water to the colder, and there will again result two pounds at 70° F. If steam be conducted into water, the former will condense until the temperature of the water has been raised to the temperature at which water boils under the prevailing pressure, after which nearly equal quantities of steam will enter and pass away. If, however, the steam be not conducted directly into the water, but be directed against the outer wall of the vessel containing the water, it will condense and transfer its latent heat to the water; and, if the heating steam be at a higher pressure than that prevailing on the surface of the water, the latter will eventually boil. There will then be a system in which the water and the vessel containing it act the part of a *surface condenser,* as opposed to an *injection condenser,* where the steam is conducted directly into the water. To give an arithmetical calculation let there be 10 lbs. of water at 82° F. contained in a vessel open to the atmosphere, and acting as a surface condenser to a current of steam at 227° F., which condenses, and is by some device or other removed at this temperature. Referring to the table at the end of this chapter, the latent heat of steam at 227° F. is 960·1 B.T.U.; to raise the 10 lbs. of water from 82° to 212° requires 130 B.T.U., and hence when $(130 \times 10) \div 960{\cdot}1$ lbs. $= 1{\cdot}354$ lbs. of steam have been condensed, the water will begin to boil. The latent heat of water at 212° F. is 969·7 B.T.U., and after boiling has begun each pound of steam condensed will cause the evaporation of $960{\cdot}1 \div 969{\cdot}7 = 0{\cdot}991$ lb. of water as steam at 212° F.

Now let the steam evaporated at atmospheric pressure be collected and conducted to a second surface condenser, in which a pressure of less than one atmosphere is maintained; exactly the same process is repeated, and the original pound of steam can in this way be conceived as causing the evaporation of an infinite quantity of water. Multiple effect evaporation is, then, a scheme for the alternate condensation and generation of steam under continually decreasing pressure.

It is to be observed that " vacuum " (or pressures less than atmospheric) has as such nothing to do with the principle, which is applicable over any range of temperature or pressure. The adoption of vacuum multiple effects in the sugar industry is due to the destruction of sugar which occurs when temperatures considerably above 212° F. are reached, and also to the production in the engines of large quantities of low pressure steam, the multiple utilization of which is possible only under reduced pressure. The method of obtaining the successively decreasing pressures will be understood by reference to the diagram, *Fig.* 183, which represents a vertical submerged tube triple effect. Each body consists of a vertical cylinder divided into two compartments by means of two transverse partitions, which are connected by tubes open at both ends. The transverse partitions are known as tube-plates, and between them and exterior to the tubes connecting them is formed a chamber separated from the rest of the body. This chamber, which is known as the calandria, receives the steam which causes evaporation in that body. The space beneath the lower tube plate, within the tubes, and a small distance above the upper tube plate is filled with the juice undergoing evaporation; the space above the level of the juice is called the vapour space, and it communicates with the calandria of the next succeeding cell by means of a conduit, *b*, known as the vapour pipe, and by means of an opening in the side of the shell of the body. The vapour pipe from the last cell leads to a condenser, where it is condensed by means of a continuous supply of cold water, combined with the removal of air by means of a pump. By this means a very low pressure is obtained in the condenser, and a pressure only a little greater in the last vapour space. The calandria of the first body communicates with a source of steam by a pipe, *b*, corresponding to the vapour pipes in the other vessels. The juice is introduced into the first body by the pipe *a*, and continuous communication, controlled by valves, is made by the pipes *a* to the last body through the intermediate body. From the calandrias of the second and third bodies small pipes, *d*, also pass to the condenser, directly or through the last body as shown. These pipes, known as the incondensible gas pipes, are provided with valves. Suppose such a system filled with juice in each body to the level of the upper tube plate. By means of the pump the air is exhausted as far as possible from the last body, and by means of the incondensible gas pipes a less degree of exhaustion can be obtained and controlled in the other two bodies. Let steam at a temperature sufficiently elevated be introduced into the first calandria; its condensation will cause the juice there to boil at the temperature corresponding to the pressure in that cell. The steam or vapour given off here will pass on to the second cell, and condensing will cause the juice there contained to boil, since a lower pressure prevails. A similar process takes place here as between the second and third body. When once started the pressures and temperatures adjust themselves as long as there is a continuous supply of steam and juice, as long as the vacuum or reduced pressure is maintained in the last body, and as long as the incondensible gases are removed.

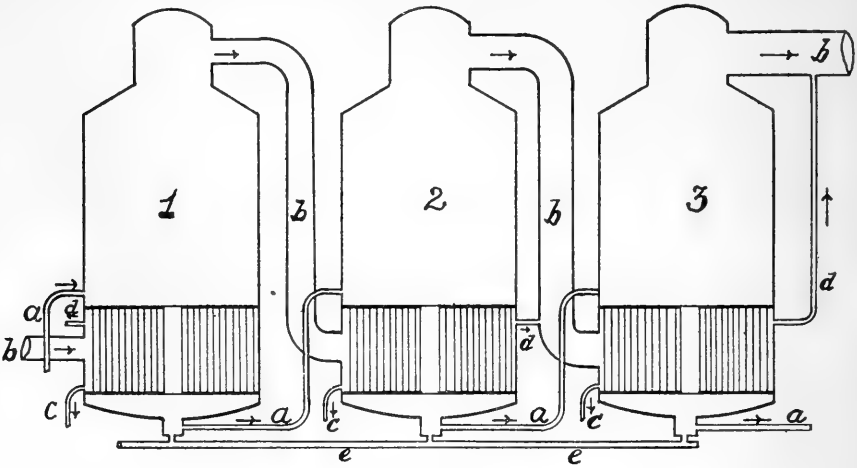

FIG. 183

As the steam in each calandria condenses to water it is removed from the calandria by the drain pipes *c*, and evacuated against the atmospheric pressure by pumps, or other devices described elsewhere. At *e* is shown a washout pipe.

In actual working in sugar manufacture the material to be evaporated is nearly always introduced to the first body only, and passes on to the last body with continually increasing concentration, whence it is pumped out against the atmospheric pressure. Similarly the steam is generally introduced to the first cell ; there is no reason why the direction of flow of juice or of steam either separately or simultaneously may not be reversed, and this scheme forms a feature of one type of apparatus referred to elsewhere. It is also employed for special purposes in other industries.

Coefficient of Transmission.—The coefficient of transmission is that quantity of heat which passes through a partition of unit area, in unit time, under unit temperature difference. In British and American engineering practice the units selected are the square foot, the hour and the degree Fahrenheit, the quantity of heat being expressed in British Thermal Units. In European practice the square metre, hour, degree Centigrade and calorie are used, so that the British or American coefficient is 3·96 times as great as the continental European value.

No difficulty attaches to expressing the coefficient of transmission in a heater or single effect evaporator, but in a multiple effect it is to be noted that the mean coefficient is not the average of the individual coefficients even when the cells are all of the same area ; actually, if h be the total heat transmitted, t be the total temperature difference, a be the total heating surface, and n be the number of effects, then the value of the coefficient is $\dfrac{h}{a \times \frac{t}{n}}$ or $\dfrac{n\,h}{a\,t}$, and if h' be the heat transmitted in one cell the coefficient becomes $\dfrac{n^2h'}{a\,t}$

For example in a triple effect of 1,000 sq. ft. in each cell, with temperature falls of 10° F., 30° F. and 60° F., and transmitting 6,000,000 B.T.U. per hour per cell, the coefficients in the first, second, and third cells are, respectively, 600, 200 and 100. The total heat transmitted is 18,000,000 B.T.U., and, since the transmission occurs in three stages, the mean coefficient for the whole apparatus is $\dfrac{18{,}000{,}000}{3{,}000 \times \frac{100}{3}} = 180.$

Distribution of Heating Surface for Maximum Efficiency.*—In a double effect let k_1 and k_2 be the coefficients of transmission in the first and second cells in which the heating surfaces are a_1 and a_2, and the temperature differences t_1 and t_2. Let $a_1 + a_2 = 1$, and also $t_1 + t_2 = 1$. Then evidently $h_1 = h_2 = k_1\,a_1\,t_1 = k_2\,a_2\,t_2$ where h_1 and h_2 are the quantities of heat transmitted.

---

* For this demonstration I am indebted to Mr. Louis Wachenberg.

Now $a_2 = 1 - a_1$ and $t_2 = 1 - t_1$,
whence $h_1 = k_1\, a_1\, t_1 = k_2\,(1 - a_1)\,(1 - t_1)$,
or $k_1\, a_1\, t_1 = k_2 - k_2\, t_1 - k_2\, a_1 + k_2\, a_1\, t_1$.

Solving, $t_1 = \dfrac{k_2\,(1 - a_1)}{a_1\,(k_1 - k_2) + k}$

Wherefore $h_1 = k_1\, a_1\, t_1 = \dfrac{k_1\, k_2\, a_1\,(1 - a_1)}{a_1\,(k_1 - k_2) + k_2}$.

Differentiating and equating to zero

$$d\,h_1 = d\,\left\{[k_1\, k_2\, a\,(1 - a_1)]\,[a_1\,(k_1 - k_2) + k_2]^{-1}\right\}$$

$$\frac{d\,h_1}{d\,a_1} = (k_1 - k_2)\,a_1^2 + 2\,k_2\,a_1 - k_2 = 0$$

Solving, $a_1 = \dfrac{-k_2 + \sqrt{k_1\,k_2}}{k_1 - k_2}$,

and $a_2 = 1 - a_1 = \dfrac{k_1 + \sqrt{k_1\,k_2}}{k_1 - k_2}$,

whence $\dfrac{a_1}{a_2} = \dfrac{-k_2 + \sqrt{k_1\,k_2}}{k_1 + \sqrt{k_1\,k_2}} = \sqrt{\dfrac{k_2}{k_1}}$

and generally if $a_1, a_2, a_3 \ldots\ldots$ are the heating surfaces, and $k_1, k_2, k_3 \ldots\ldots$ the coefficients of transmission, then for maximum efficiency or for the passage of the greatest quantity of heat

$$\frac{a_1}{a_2} = \frac{\sqrt{k_2}}{\sqrt{k_1}},\qquad \frac{a_2}{a_3} = \frac{\sqrt{k_3}}{\sqrt{k_2}}.\ \ldots\ldots \text{etc.}$$

Similar reasoning gives $\dfrac{t_1}{t_2} = \dfrac{\sqrt{k_2}}{\sqrt{k_1}}$, $\dfrac{t_2}{t_3} = \dfrac{\sqrt{k_3}}{\sqrt{k_2}}$, so that in all cases for maximum efficiency the division of heating surface and of temperature difference is the same.

As a numerical example, let the coefficients of transmission in the first, second and third cells of a triple effect be 9, 4 and 1. Then for maximum efficiency $\dfrac{a_1}{a_2} = \dfrac{\sqrt{4}}{\sqrt{9}} = \dfrac{2}{3}$ and $\dfrac{a_2}{a_3} = \dfrac{\sqrt{1}}{\sqrt{4}} = \dfrac{1}{2}$.

and if $a_1 + a_2 + a_3 = 1$, then $a_1 = \dfrac{2}{11}$, $a_2 = \dfrac{3}{11}$, $a_3 = \dfrac{6}{11}$.

Also $t_1 = \dfrac{2}{11}$, $t_2 = \dfrac{3}{11}$, $t_3 = \dfrac{6}{11}$ where $t_1 + t_2 + t_3 = 1$,

and $k_1\,a_1\,t_1 = 9 \times \dfrac{2}{11} \times \dfrac{2}{11} = k_2\,a_2\,t_2 = 4 \times \dfrac{3}{11} \times \dfrac{3}{11} = k_3\,a_3\,t_3 = 1 \times \dfrac{6}{11} \times \dfrac{6}{11} = \dfrac{36}{121}$

which is the maximum value under the stated conditions.

Within the limits that occur in practice, however, no great advantage is to be found in dividing the heating surface as indicated above. Economy in construction costs is obtained by building all vessels of equal size, and there are reasons to believe that in the last cell where a very viscous material is boiled, the coefficient transmission increases more rapidly than does the temperature difference. It is well then to aim at having a large temperature difference here, and since the transmission coefficient is least in the last cell, this end will follow when the cells are all of equal size.

Computation of the Conditions in a Multiple Effect.—Let the temperatures in the four cells of a quadruple be 212° F., 203° F., 185° F., and 130° F. Let 1 lb. steam at 227° F. and 6 lbs. juice at 212° F. enter the first effect, the specific heat of the juice being 0·9.

The 1 lb. steam at 227° F. condensing and passing away as water at 212° F. to Cell 2 gives up 975·2 B.T.U. and evaporates 1·006 lbs. of water from and at 212° F.

There passes on to the calandria of the second cell 1·006 lbs. of steam at 212° F. and 1 lb. of water also at 212° F.; 2·006 lbs. water leave the calandria of Cell 2, so that in all 978·8 B.T.U. have been surrendered, and the corresponding evaporation from and at 203° F. will be 1·013 lbs. water. Simultaneously 4·994 lbs. of juice pass from Cell 1 to Cell 2, and in cooling down from 212° F. to 203° F. give up 4·994 × (212 − 203) × 0·9 B.T.U., or 40·5 B.T.U., corresponding to the evaporation of 0·042 lb. water.* The total evaporation in Cell 2 is then 1·055 lb. of water.

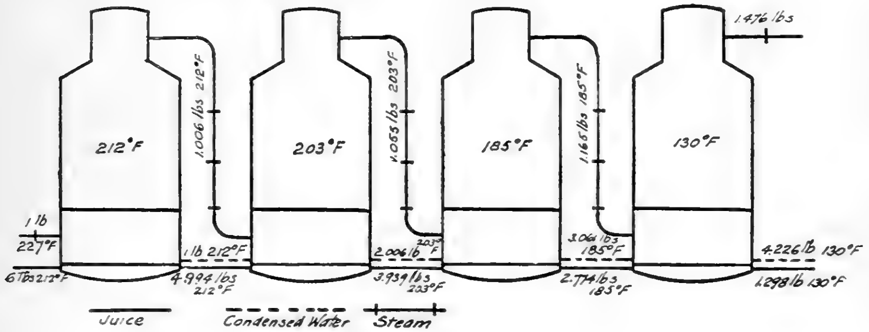

FIG. 184

Following on these lines the total evaporation in Cell 3 is determined as 1·165 lb., and that of Cell 4 as 1·476 lb. water.

The final state of the apparatus is then as follows :—

Water at 130° F. discharged from Calandria 4	4·226 lbs.
Steam at 130° F. discharged from Vapour space 4	1·476 lbs.
Syrup at 130° F. discharged from Cell 4	1·298 lbs.

These results are shown diagrammatically in *Fig.* 184.

The total evaporation per lb. of steam is 4·702 lbs., and expressed per unit of juice admitted the final position is :—

Juice at 212° F.	1·000
Condensed water at 130° F.	0·704
Syrup at 130° F. and 0·6 specific heat	0·216
Vapour at 130° F.	0·246
Steam admitted at 227° F.	0·167
Water evaporated	0·784

This computation gives in a quadruple effect 4·702 lbs. water per lb.

---

* This is known as "self-evaporation."

steam as the maximum possible evaporation. The method of computation assumed that the condensed water in each cell passed on to the next with complete transference of heat, and that the juice entered the first cell at the temperature there prevailing. Under actual conditions the juice usually enters at a lower temperature, the condensed water is not generally passed on, and the exchange of heat is not complete. In addition, no account is taken of radiation losses and of heat carried forward in the evacuation of the incondensible gases. Further, as stated later, the exchange of heat between condensed water and juice is very small, and some amount of superheating of vapours occurs.

So great an economy can never obtain, and some experimental results are given later, which may be compared with those computed above.

With evacuation of the water separately from each cell the maximum computed evaporation per pound of steam will be found to be from 4·3 to 4·4 lbs. water. In a triple effect the evaporation as computed above will be from 3·4 to 3·5 lbs. with circulation of the condensed water, and from 3·1 to 3·2 lbs. with its separate removal.

In so far as the effect of introducing juice below the temperature of ebullition in the first cell is concerned, it is to be remembered that heat consumed in elevation of the temperature is not used in multiple effect. In a quadruple effect the evaporation per pound of steam supplied will be as indicated below, with juice introduced at the temperature shown and as computed on the lines used above.

Temperature of Juice F°.	Lbs. water per lb. of Steam.	
	Condensed water circulated.	Condensed water separated.
160	3·69	3·29
165	3·75	3·37
170	3·85	3·46
175	3·96	3·56
180	4·06	3·65
185	4·16	3·75
190	4·26	3·84
195	4·37	3·94
200	4·47	4·04
205	4·57	4·13
210	4·67	4·23

According to the computations above there is a progressively increasing evaporation in each cell, which with circulation of the condensed water is :—

Cell I.	Cell II.	Cell III.	Cell IV.
1·000	1·057	1·164	1·479
21·3%	22·4%	24·8%	31·5%

If the juice enter at B_0 and leave at B_n the total evaporation per 100 juice is $\frac{B_n - B_0}{B_n}$ If, in the case worked out in detail, the juice enter at 13° Brix, it will leave at 60·8° Brix, and the total evaporation will be

78·6 per cent., while the degree Brix of the juices leaving each cell will be

Cell 1 : $13 \div (1 - 0{\cdot}786 \times 0{\cdot}213) = 15{\cdot}6$.

Cell 2 : $13 \div \{1 - 0{\cdot}786\,(0{\cdot}213 + 0{\cdot}224)\} = 19{\cdot}7$.

Cell 3 : $13 \div \{1 - 0{\cdot}786\,(0{\cdot}213 + 0{\cdot}224 + 0{\cdot}248)\} = 33{\cdot}8$.

Cell 4 : $13 \div \{1 - 0{\cdot}786\,(0{\cdot}213 + 0{\cdot}224 + 0{\cdot}248 + 0{\cdot}315)\} = 60{\cdot}8$.

The conditions as determined experimentally in a multiple effect are not as computed, and hence it is not advisable to use these results as a basis of design or for other purpose generally, except as a means of demonstration of underlying principles.

The Actual Conditions obtaining in Multiple Effect Apparatus.—In the following pages an account is given of observations made by the writer, chiefly on a vertical submerged tube quadruple from which steam was not separated. The nomenclature adopted is shown in *Fig.* 185, where *C*, *J*, *VS*, and *CW*, distinguished by appropriate suffixes, denote the temperatures of the steam in the calandria, of the juice, of the vapour space, and of the condensed water. *C* was observed in the vapour pipe immediately before it entered the calandria ; *VS* was observed about three feet above the upper tube plates ; *J* and *CW* were observed in the pipes as the juice or water left an effect.

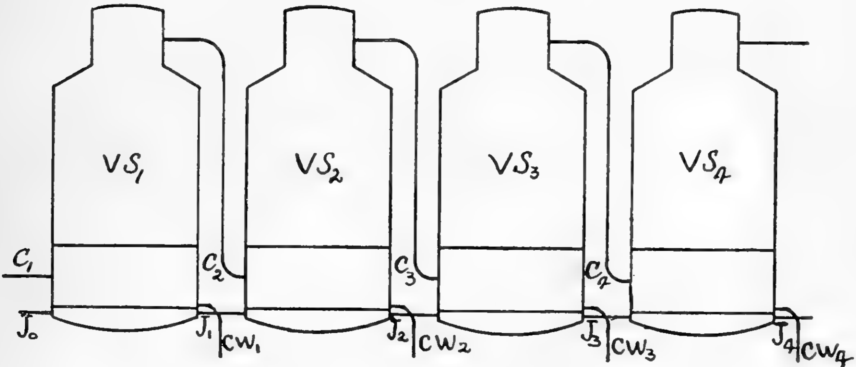

FIG. 185

The temperature difference in any cell is $C_n - J_n$, and the total temperature difference is $C_1 - J_n$ where n is the number of vessels : the values of J_n, VS_n, C_{n+1}, CW_{n+1} were found to be very close together and to be in descending order of magnitude. In what follows $C_n - C_{n+1}$ is usually taken as the temperature difference in any cell, since these temperatures are the ones most easily observed, and $C_1 - VS_4$ is sometimes taken as the gross temperature difference.

Distribution of the Temperature Difference.—Under the conventional methods of operation the total available fall in temperature is of the order 100° F. This fall is unevenly divided between the cells, and it is the last cell that absorbs an undue proportion of the available fall. The balance of the temperature difference is unevenly divided between the other bodies. In an apparatus with each cell equally clean there are reasons for believing that $C_1 - J_1 < C_2 - J_2 < C_3 - J_3 < C_4 - J_4$, but very often $C_2 - J_2$ is found to be less than $C_1 - J_1$, and infrequently $C_3 - J_3$ is also less than $C_1 - J_1$. The excessive absorption in the last body is accounted for by the lower temperature at which it boils, by the greater quantity of scale depositing on the tubes, by the viscosity and consequent lower rate of transmission in the heavy syrup, and also by the lower density of the steam. The lower rate frequently observed in the first body is probably to be accounted for by a deposit of oil and grease on the steam side of the tubes and also in some cases to scale on the juice side, particularly if badly defecated juices are sent to the evaporator. Another cause is to be found in the heating required in this cell. An entirely different factor controlling the distribution of the fall lies in the manipulation of the valves controlling the incondensible gas system.

Below are given some actual observations by the writer; as for the apparatus, 1, 2, 3 were of the vertical submerged tube type, 4 was a horizontal submerged tube, and 5 was a horizontal film apparatus.

Distribution of Temperature Fall in Quadruple Effects.

	1	2	3	4	5
C_1	225·5	218·5	222·3	230·2	227·7
C_2	215·8	202·0	208·0	213·1	213·0
C_3	202·7	194·0	199·3	201·9	189·0
C_4	182·9	185·1	167·0	184·9	166·1
VS_4	127·0	143·0	122·0	126·0	130·0
$C_1 - C_2$	9·7	14·0	14·3	17·1	14·7
$C_2 - C_3$	13·1	8·0	18·7	11·2	24·0
$C_3 - C_4$	19·8	8·9	31·3	17·0	21·1
$C_4 - VS_4$	55·9	42·1	45·0	58·9	38·0
$C_1 - VS_4$	98·5	73·0	100·3	104·2	97·7
$\frac{C_1 - C_2}{C_1 - VS_4} \times 100$ ..	9·8	19·2	14·2	16·4	14·4
$\frac{C_2 - C_3}{C_1 - VS_4} \times 100$ ..	13·3	11·0	13·6	10·7	23·4
$\frac{C_3 - C_4}{C_1 - VS_4} \times 100$ ..	20·1	12·2	31·2	16·3	20·6
$\frac{C_4 - VS_4}{C_1 - VS_4} \times 100$ ..	56·8	57·7	45·0	56·6	37·1

A very detailed series of observations of this nature has also been made by Kerr[10] covering in addition double and triple effects. The same relatively great absorption was observed in the last body, amounting to from 39 to 63 per cent. of the total in quadruples, from 50 to 68 per cent. in triples, and from 49 per cent. to 84 per cent. in double effects. Similarly, his results also show a very irregular distribution of the fall as between the first three or first two bodies.

Temperatures and Pressures.—The temperatures and pressures observed do not correspond with those for saturated steam, and invariably some degree of superheat is found. In a vertical submerged tube apparatus the following observations were made :—

	Calandria 3.	Calandria 4	Vapour space 4.
Vacuum, ins.	6·9	16·4	26·2
Temp. corresponding to vacuum, F° ..	198·5	173·9	119·6
Observed temp., F°	199·7	176·2	135·3
Superheat	1·2	2·3	15·7

Evaporation in each Cell.—The computation given above showed that there should be a progressive increase in evaporation from cell to cell, but on actual experiment the very irregular results given below were found. The evaporation in each cell will be controlled by part of the heat appearing as superheat, and by the quantity of steam carried forward with the incondensible gases. The experiments were made with three sets of apparatus, and, if anything, point to a nearly equal evaporation in the first three cells, with a small increase in the last cell, much less than the computed increase. In all these experiments the condensed water was discharged from each cell direct.

Percentage Evaporation in each Cell.

Cell 1.	Cell 2.	Cell 3.	Cell 4.
18·00	21·87	21·05	20·80
21·14	19·66	19·49	20·57
23·74	19·05	19·69	20·38
20·07	19·97	21·28	21·96
17·24	22·65	20·02	20·80
21·14	19·66	19·49	20·87
20·07	17·30	16·92	17·44
16·89	17·50	19·35	21·13
17·26	18·10	20·07	19·75
Average 19·6	19·5	19·7	20·3

The Actual Amounts of Water Evaporated.—This quantity was determined by the writer in five quadruple effect evaporators; the results given below are calculated to the *equivalent evaporation per lb. of dry steam with juice entering at the temperature prevailing in the first cell.* By efficiency is meant the percentage of heat accounted for in evaporation compared with the maximum possible under the conditions of operation, *i.e.*, with reference to the methods used for elimination of water and incondensible gases.

1. Horizontal film; 8906 sq. ft. h.s. evaporating at rate of 5–6 lbs. per sq. ft.-hr.; 2,170 sq. ft. area protected with 1 in. asbestos; 330 sq. ft. bare; water from Cell 1, discharged direct, from Cells 2, 3, 4, through Cell 4; gases vented from cell to cell. C_1 225° F.; VS_4 130° F.; water evaporated/steam condensed 3·88; efficiency 90·0 per cent.

2. Horizontal film; 9,775 sq. ft. h.s. evaporating at rate of 9–10 lbs. per sq. ft.-hr.; 2,800 sq. ft. area, all bare; water discharge and gases as in 1. C_1 214° F.; VS_4 132° F.; water evaporated/steam condensed 3·61; efficiency 88·6 per cent.

3. Horizontal submerged tube; 11,284 sq. ft. h.s. evaporating at rate of 6–7 lbs. per sq. ft.-hr.; 1,670 sq. ft. area protected with 1 in. asbestos,

1,280 sq. ft. bare; water discharged separately from each cell; gases as in 1; C_1 235° F.; VS_4 140° F.; water evaporated/steam condensed 3·83; efficiency 92·6 per cent.

4. Vertical submerged tube, 12,521 sq. ft. h.s., evaporating at rate of 5–6 lbs. per sq. ft.-hr.; 2,010 sq. ft. area protected with 2 ins. asbestos, or wood and ½ inch air space; 240 sq. ft. bare; water and gases as in 3; C_1 217° F.; VS_4 146° F.; water evaporated/steam condensed, 4·07; efficiency 95·3 per cent.

5. Vertical submerged tube, 14,146 sq. ft. h.s., evaporating at rate of 9–10 lbs. per sq. ft.-hr.; 2,460 sq. ft. protected with 2 ins. asbestos, 290 sq. ft. bare; water and gases as in 3; C_1 229° F., VS_4 125° F.; water evaporated/steam condensed, 4·31; efficiency 99·9 per cent.

Another series of tests made by Kerr[10] gave efficiencies varying from 85·1 to 100·4, and are in good agreement with those quoted above.

The Apparent and the Effective Fall in Temperature.—If C_1 be the temperature of the entering steam and J_4 be the temperature of the juice boiling in the last cell of a quadruple, the total fall in temperature over which heat is transmitted is $C_1 - J_4$.* The effective fall in temperature is $C_1 - J_1 + C_2 - J_2 +$ etc.; which is always less than $C_1 - J_4$.

There are three factors which influence the effective fall.

1. In the passage of steam from one cell to the next and in the passage through the calandria some loss of temperature must occur; the magnitude of this loss will depend on the size of the connection pipes, on their insulation, and on the pitch and arrangement of the tubes in the calandria. In an apparatus in which the vapour pipes were covered with 2 ins. asbestos, and were of diameter 23 ins., 27 ins. and 31 ins. in a quadruple effect of 14,146 sq. ft. h.s., the writer found the following losses: VS_1 to C_2, 0·2° F.; VS_2 to C_3, 0·7° F.; VS_3 to C_4, 0·8° F.; or in all, 1·7° F. The loss from VS_4 to the condenser varied from 1° F. to 3° F. in different apparatus, depending on the velocity of the gases in and the length of the vapour pipe. The total loss in the calandrias has been estimated by Claassen[11] as of the order 0·5° F. as in the second, third, and fourth vessels, and is hence very small.

2. As the material under evaporation is not water but a solution, the boiling point is raised above the normal boiling point of water corresponding to the various pressures, but the vapour given off will be, or tends to be, at the temperature corresponding to the vapour pressure; actually, however, the vapours are found to be superheated.

3. The formation of steam at the bottom of the column of boiling juice takes place under the pressure due to the vapour plus that due to the weight of the column of liquid; this is usually called the *hydrostatic head.* For example, suppose in the fourth body the pressure is 2·42 lbs. per sq. in.; the height of the column of liquid is 4 feet, and its density 1·25; then the weight of a column of 1 sq. in. section is $48 \times 1{\cdot}25 \times 0{\cdot}036 = 2{\cdot}16$ lbs., and the total pressure is 4·58 lbs. per sq. in.; under a pressure of 2·42 lbs. per sq. in., the boiling point of water is 132° F., and at 4·58 lbs. per sq. in. it is 159° F., so that the temperature difference appears to be 27° F. less at the bottom than at the top. In the annexed table are given the results of other calculations, whence it will appear that the effect of the hydrostatic head increases as the pressure decreases.

---

* Some writers take C_1—VS_4 as the total fall in temperature, and further the temperature in the condenser might be substituted for J_4.

Mean height of column of water causing increase in pressure.	Vacuum in Inches of Mercury.					
	5	10	15	20	25	27·5
	Increase in Temperature F°.					
12	1·7	2·0	2·6	3·6	6·2	10·8
18	2·5	3·0	3·8	5·3	9·1	15·3
24	3·3	4·0	5·0	7·0	11·8	19·5
30	4·2	5·0	6·2	8·6	14·4	23·0

This loss in the fall of temperature was first discussed by Jelinek, who also observed that thermometers inserted at different levels in the cells of evaporators did not indicate different temperatures. This is due to the rapid movement of the boiling liquid, and the equally rapid transfer of heat from the overheated to the cooler particles: it was again in consideration of this effect that the Welner–Jelinek type of evaporator was designed, in which a low level of juice is obtained. The further development of this idea leading to elimination of the effect of hydrostatic head is seen in the Lillie type of film evaporator. The decrease in the rate of evaporation due to loss of temperature difference in vertical submerged tube apparatus is, however, masked by a vigorous circulation, so much so that the disadvantages of decreasing the length of the tube will offset any increased efficiency to be derived therefrom: a tube 5 ft. long, more or less, which most makers have adopted, seems to be the economic length.

The Rate of Evaporation as influenced by Change in the Temperature Difference and by Change in the Position of the Temperature Difference in the Absolute Scale of Temperature.—The temperature difference in an evaporator may be increased by increasing the pressure of the steam entering the first body (increase of C_1), or by decreasing the pressure under which ebullition occurs in the last body (increase of "vacuum" or decrease of VS_4 or J_4): if also C_1 and VS_4 be altered simultaneously, $C_1 - VS_4$, which is the temperature difference, may remain unchanged.

Some experiments made to connect these changes with the rate of evaporation are detailed below.

The rate of evaporation may be determined experimentally in three ways:—

1. Measurement of the syrup discharged from the last body, combined with observation of the solids in the incoming juice and outgoing syrup.

2. Measurement of the juice admitted, combined with the same observations as in 1. Either of these methods demands that the contents of the apparatus be the same at the end as at the beginning of an experiment.

3. Measurement of the water discharged from a cell. This will not give the absolute evaporation in the apparatus unless the relative evaporation in each cell is known, combined with a knowledge of the ratio between steam condensed and water evaporated; results as between different experiments will, however, be comparative. The first cell is most amenable

for use, since the water here, being usually under pressure, discharges itself.

The writer examined a number of apparatus to obtain information on this matter: the detailed results obtained with one vertical submerged tube apparatus are given in the two schedules below; these differ in no essential from other results obtained in other apparatus. In these experiments the rate of evaporation was obtained by observing the time required to fill a tank holding 39,100 lbs. water with the discharge from the first cell: this observation is recorded as T in seconds. The apparatus had 14,146 sq. ft. heating surface, calculated on the inside of the tubes and including the tube plates and circulating well. The coefficients of transmission in the first and fourth cell and the coefficient of the apparatus as a whole are recorded in B.T.U. per 1° F. per 1 sq. ft. per 1 hour as k_1, k_4 and k_m; per lb. of water evaporated a flat rate of 1,000 B.T.U. is taken for each cell; an equal evaporation is taken as obtaining in each cell, as was found experimentally to be very nearly the case. The ratio of steam condensed to water evaporated is taken as 1 : 4; actually 1 : 4·3 was found for the whole apparatus, but this quantity was not determined for each cell.

The experiments were all made over one day so as to remove as far as possible errors due to scale formation, and when the conditions were altered a sufficient interval was allowed to enable the apparatus to adjust itself to the change.

Rate of Evaporation in a Quadruple Effect as influenced by "Vacuum" in last Body.

C_1	220·1	220·1	220·0	219·9	220·0	219·8	220·1	220·1
C_2	210·7	211·0	211·2	211·4	211·5	211·7	212·2	212·4
C_4	176·2	177·8	181·0	183·1	183·0	187·5	188·0	189·0
VS_4	122·5	126·0	130·0	134·9	135·0	140·4	145·1	148·4
"Vacuum," ins.	27·6	27·4	26·9	26·4	26·4	25·7	24·9	24·3
$C_1 - C_2$ ..	9·4	9·1	8·8	8·5	8·5	8·1	7·9	7·7
$C_4 - VS_4$ ..	53·7	51·8	51·0	48·2	48·0	47·1	42·9	40·6
$C_1 - VS_4$ ..	97·6	94·1	90·0	85·0	85·0	79·4	75·0	71·7
$\frac{C_1 - C_2}{C_1 - VS_4} \times 100$	9·63	9·66	9·78	10·00	10·00	10·24	10·53	10·82
$\frac{C_4 - VS_4}{C_1 - VS_4} \times 100$	55·0	55·0	56·6	56·6	56·5	59·3	57·2	56·5
T (secs.) ..	568	599	640	692	701	754	772	835
$T (C_1 - C_2)$ ..	5339	5491	6532	5882	5958	6112	6098	6432
$T (C_4 - VS_4)$ ..	30502	31028	32640	33354	33648	35513	33119	33898
K_1	745	726	707	677	667	651	653	620
K_4	130	128	122	119	118	112	120	117
K_m	202	199	195	193	189	189	195	183
Lbs. water per sq. ft.-hr. ..	7·00	6·65	6·22	5·76	5·68	5·29	5·17	4·77

Another series in the same apparatus, but the converse of the above, namely, keeping the cold end constant and increasing the temperature of the heating steam, gave the following results:—

RATE OF EVAPORATION IN A QUADRUPLE EFFECT AS INFLUENCED BY "PRESSURE" OF STEAM IN FIRST CALANDRIA.

C_1	212·6	216·2	220·1	223·3	226·9	230·8
C_2	207·1	208·9	211·1	212·7	215·6	218·6
C_4	169·0	171·7	175·1	178·1	181·2	184·0
VS_4	120·3	121·2	122·5	123·4	124·6	126·0
"Vacuum," ins.	27·0	26·9	26·7	26·6	26·5	26·3
$C_1 - C_2$	5·5	7·3	9·0	10·6	11·3	12·2
$C_4 - VS_4$	48·7	50·5	52·6	54·7	56·6	58·0
$C_1 - VS_4$	92·3	95·0	97·6	98·9	102·3	104·8
$\frac{C_1 - C_2}{C_1 - VS_4} \times 100$	5·95	7·68	9·22	10·71	11·05	11·64
$\frac{C_4 - VS_4}{C_1 - VS_4} \times 100$	53·1	53·1	53·9	55·2	55·1	55·4
T (secs.)	1012	776	642	520	479	445
$T (C_1 - C_2)$	5566	5665	5778	5572	5413	5329
$T (C_1 - VS_4)$	49284	40298	33769	28444	27111	25810
K_1	508	497	487	510	521	518
K_4	81	99	118	139	147	154
K_m	171	216	254	309	326	337
Lbs. water per sq. ft.-hour	3·95	5·13	6·20	7·65	8·33	8·95

Analysis of the results in the two preceding schedules leads to the following conclusions :—

1. The value of K_4 increases as the temperature difference increases, although certain observations present irregularities, probably due to errors of experiment and to difficulty in maintaining all desired conditions unchanged.

2. In the series with C_1 constant and VS_4 varying, the value of K_m does not suffer much change, so that the water evaporated is nearly directly proportional to the total temperature difference, or to $C_1 - VS_4$.

3. Comparisons of values of K are obscured by the effect of the variation in the absolute value of the temperature difference, and by its position in the absolute scale of temperature ; thus in the series with C_1 constant, K_1 regularly increases as $C_1 - C_2$ increases, and K_4 remains fairly constant with a slight increase in the same sense. The less values of K_4 occur when $C_4 - VS_4$ is smaller, but higher in the absolute scale of temperature. These two influences may counterbalance each other, so that the combined effect on K_4 is small. On the other hand, in the series with C_1 varying and VS_4 designed to be constant (actually, however, with a variation of 6° F.) there is small change in the value of K_1, with, if anything, a tendency to increase as $C_1 - C_2$ increases. K_4, however, increases very largely, and here increase in the value of $C_1 - VS_4$ is accompanied by an elevation of the position of $C_1 - VS_4$ in the absolute scale of temperature ; at the same time a very material increase occurs in the value of K_m.

4. Increasing the temperature difference ($C_1 - VS_4$) by increasing the temperature at the hot end (increase of C_1 or increase in the pressure of the heating steam), increases the value of K_m or the capacity of the apparatus much more than in direct proportion to the value of $C_1 - VS_4$. Increasing

the temperature difference by decreasing the temperature at the cold end (decrease of VS_4 or increase of the vacuum) leaves the value of K_m fairly constant, so that the rate of evaporation is approximately in direct proportion to the value of $C_1 - VS_4$.

5. Between such limits of pressure and vacuum as are found in practice, the value of K_m in one and the same apparatus may lie between 180 and 350, and the capacity of the apparatus may vary from 4 to 9 lbs. water evaporated per sq. ft. per hour.

6. The value of $C_1 - C_2$, which can be easily observed, forms a rough index of any change in the rate of evaporation.

The Different Methods for the Utilization of Steam.—The different systems found installed in recent cane sugar houses may be classed as follows :—

1. The heating, evaporation, and graining systems are entirely disconnected.

2. Steam is separated from a cell or cells of the multiple effect evaporator and used for heating or in graining. This system is known generally as the Rillieux–Lexa combination, and is that shown in Rillieux's classical patent (U.S. 4879, 1846).

3. An independent evaporator is installed operating under a higher pressure, and the steam generated is used for heating, evaporating or graining. The independent evaporator may be operated at single or multiple effect. The most convenient, and the generally adopted arrangement, is to allow the steam generated from the independent evaporator to discharge into the exhaust steam main. This evaporator is known as the pre-evaporator, fore-boiler, or O-cell ; the system is usually referred to as the Pauly-Greiner combination.

4. Regeneration of low pressure steam by thermo-compression, or by mechanical pressure.

All of these systems may be combined and combinations of the second and third systems are frequent.

An analysis of the heat consumption in the first three systems follows.

Let H and G be the quantities of steam necessary for heating and graining, and let E be the quantity of steam necessary for the concentration to syrup, referred to single effect, then $S = H + G + \frac{E}{n}$ where S is the total quantity of steam required and n is the number of vessels in series in the evaporator.

The Rillieux–Lexa combination has for its object the separation of steam from a cell of the evaporator, and the use of this steam for heating or graining : these operations may be referred to as obligatory single effect processes.

Let O be the consumption of steam required for obligatory single effect work, and let E be that required for potential multiple effect work expressed in terms of single effect ; then, at single effect throughout, the consumption of steam is a maximum and is $O + E$. If E is done at n effect, the consumption is $O + \frac{E}{n}$, and the saving in steam is $E - \frac{E}{n}$.

Now let there be n effects, and let p_1, p_2, etc., steam be separated from the first, second, etc., vessels, and used towards doing the work represented by O ; let Z be the steam supplied to (or water evaporated from) the first cell from which steam is not separated; let F be the steam which must be supplied to the first cell. Then—

$$nZ + p_1 + 2p_2 + 3p_3 + \ldots\ldots + np_n = E$$

$$Z = \frac{E - p_1 - 2p_2 - 3p_3 - \ldots\ldots np_n}{n}$$

$$F = \frac{E - p_1 - 2p_2 - 3p_3 - \ldots\ldots np_n}{n} + p_1 + p_2 + \ldots\ldots + p_n.$$

The total consumption of steam is then—

$$F + O - p_1 - 2p_2 - \ldots\ldots np_n = \frac{E - p_1 - 2p_2 - \ldots\ldots - np_n}{n} + O.$$

Without separation of steam the consumption was $\frac{E}{n} + O$, so that the saving is $\frac{p_1 + 2p_2 + \ldots\ldots + np_n}{n}$.

Now with an apparatus of n effects, let an independent apparatus be installed, to which p_0 steam is delivered, and from which p_0 steam is generated, and used towards doing the work represented by O; then using the same notation as before, $S = H - p_0 + \frac{E - p_0}{n}$, and the saving is $\frac{p_0}{n}$, the same as if p_0 had been separated from the first cell of a multiple of n effects.

The pre-evaporator may also be a double or even a triple effect apparatus, in which case $S = H - mp_0 + \frac{E - mp_0}{n}$, and may also be operated in connection with a multiple from which steam is separated, when the value of S becomes $H - mp_0 + \frac{E - mp_0 - p_1 - 2p_2 - \ldots\ldots np_n}{n}$ where m is the number of effects in series in the pre-evaporator and the other symbols are as before.

From the above it follows that the maximum economy is reached when the steam delivered to the multiple is equal to that required for obligatory single effect evaporation; that is to say, when $\frac{E}{n} = O$. In any case, the economy increases as the steam separated for obligatory single effect evaporation is taken from a vessel later in series.

The actual working limit of economy is controlled by the following factors:—

1. The value of n cannot be indefinitely increased, since the upper limit of temperature to which sugar solutions may be exposed without destruction is about 260° F., and the lower limit obtainable by reduction of pressure is about 120° F.

2. As the value of n increases, the cost of apparatus in relation to capacity also increases.

3. The utilization of steam at lower temperatures is limited, since the necessities of manufacture require juices to be heated to about 212° F.

4. No economy obtains if the consumption of steam is reduced below that corresponding to the production of exhaust steam from the engines,

though attention to this point may open the way to the adoption of the more economical schemes.

5. The presence of a waste product, bagasse,* which serves as a fuel, eliminates the necessity for the ultimate economy as long as this material affords steam to operate the factory at the maximum efficiency as regards the extraction of sugar.

Computation of the Steam Consumption.—The steam required in a cane sugar factory will be divided between that used in the engines and that in the heating and evaporation. The greater part of that used in the engines appears again as low pressure steam available for heating and evaporation. With modern engines of the Corliss type, operated at not less than seven atmospheres gauge pressure, and exhausting at half an atmosphere, a consumption of 30 lbs. steam per indicated horse-power-hour is usual. With slide valve engines and lower initial pressures this figure will rise to 45 lbs., and in small isolated units a consumption of 60 lbs. may easily be reached. With non-condensing steam turbines of larger (1,000 H.P.) capacity operating at higher pressures and with superheated steam, the consumption is probably rather greater than that of a Corliss engine. With the smaller units and lower pressures the consumption may rise to 60 lbs.

Power.—The demand for steam for use in the engines will depend on a number of factors, the most important of which are the number of units in the milling plant, the fibre in the cane, the water supply and the elimination of small isolated steam-driven units obtained either by intelligent grouping or by the adoption of electric drive. Actual experiment by the writer in a house working up 65 tons of cane per hour with 12 per cent. of fibre gave the following data:—Crusher and 12-roller mill, 87·7 I.H.P. per ton-fibre-hour; quadruple vacuum pump, 28 I.H.P.; pan vacuum pumps, 43 I.H.P.; centrifugals, 72 I.H.P.; crystallizers, 16 I.H.P. Combining these data with others of record, the following estimate of power consumed can be obtained:—

ESTIMATE OF POWER CONSUMED IN A RAW SUGAR FACTORY WORKING UP 100 SHORT TONS OF CANE WITH 11 PER CENT. FIBRE PER HOUR IN A CRUSHER AND 12-ROLLER MILL, AND WITH INJECTION WATER PUMPED TO THE CONDENSERS, BUT NOT CIRCULATED IN A COOLING TOWER.

	Indicated Horse-Power.
Cane unloading and elevating	35
Milling Plant, including strainers, cush-cush, elevators, etc.	1,000
Bagasse conveyors	25
Boiler feed pump	50
Water supply pump	100
Quadruple vacuum pump	45
Pan vacuum pumps	60
Centrifugals with accessory gear	150
Crystallizers	25
Juice pumps	20
Various small pumps	75
Electric light and ice plant	45
Mechanics and carpenters' shop	20
	1,650

---

* The possibility of using bagasse as a paper-making material may in the future alter the correctness of this statement.

With engines of reasonable efficiency, and with the elimination of small isolated units, especially of direct action steam-driven pumps, a consumption of 30 lbs. steam per indicated horse-power-hour may be obtained; of this quantity 25 lbs. should appear in the exhaust and 5 lbs. will disappear in cylinder condensation, etc. The steam actually used then in power is 1,650 × 5, or 8,250 lbs. or 4·1 per cent. on cane.

It is apparent that this estimate refers only to the stipulated conditions, and that under other circumstances a different total consumption and different distribution will result.

Heating and Evaporation.—The heat efficiencies of heating and evaporation have been determined by Kerr,[10] the writer and others. From a study of the results it is conservative to accept as a basis of design a consumption 105 per cent. of that computed with no loss of heat; the steam required at the different stations may then be determined as follows:—

Juice Heaters.—Let the juice have a specific heat of 0·9 and let steam at 5 lbs. gauge be employed to heat the juice; then the consumption per 1 lb. per 1° F. is $\frac{1 \times 0{\cdot}9}{960{\cdot}1 \times 0{\cdot}95} = 0{\cdot}000986$ lb. steam.

Evaporators.—With juice entering at the temperature of ebullition in the first cell, the consumption of steam per lb. of water evaporated will be chiefly controlled by the temperature at which the syrup leaves, by the system adopted for evacuating the condensed water, and by the percentage of evaporation. For initial steam at 5 lbs. gauge, syrup leaving at 130° F., and water evacuated from each cell at the temperature of the steam entering that cell, and 95 per cent. heat efficiency, 1 lb. of steam on computation will be found to evaporate $n + a$ lbs. of water, where n is the number of effects and a is small. For convenience of calculation and to add a further margin of safety a is neglected.

Pans.—In the process of pan boiling the syrup becomes diluted with the washings from the tanks, with water used at the centrifugals, and with water used to dilute the molasses before reboiling. All these additions of water are estimated as being 2 per cent. on cane. In addition the syrup from the multiple, when held over, cools to some extent, and the molasses will nearly cool down to the temperature of the atmosphere, all of which causes tend to make a computation rather uncertain. Actually, with a steam pressure of 40 lbs. gauge, and a temperature in the pan of 140° F., 1 lb. of steam will evaporate at 95 per cent. efficiency $\frac{927 \times 0{\cdot}95}{1{,}027} = 0{\cdot}85$ water; allowing, however, for the sources of extra consumption mentioned above, an allowance of 0·7 lb. water per lb. of steam is all that can be counted on, including in this estimate all the sources of steam consumption indicated in this paragraph.

Let the factory, the steam consumption of which is to be analysed, work up 100 tons cane with 11 per cent. fibre per hour and obtain 120 tons dilute juice, which, with washings from tanks and filter cake washings, become, as delivered to the first cell of the evaporator, 130 tons at 13° Brix. Then for the first heating of the juice from, say, 82° F. to 212° F., there will be required 130 × 120 × 0·000986 = 15·4 steam per cent. on cane.

For the reheating of the juice from, say, 190° F. to 212° F. there will be required 130 × 22 × 0·000985 = 2·8 steam per cent. on cane.

For concentrating 130 tons of juice from 13° to 65° Brix there are to be removed $130 \times \frac{65 - 13}{65} = 104$ tons of water, which in quadruple effect will require 26·0 steam per cent. on cane.

If the whole evaporation of water in graining be considered as equivalent to a concentration to 96° Brix, in one operation the water removed is $130 \times \frac{96 - 13}{96} - 104 = 8 \cdot 4$ tons, to which is to be added 2 tons water as representing washings from tanks, at centrifugals, dilution of molasses, and water surreptitiously introduced into the pan. The consumption of steam is then $\frac{10 \cdot 4}{0 \cdot 85} = 12 \cdot 2$ steam per cent. cane, to which is added 0·3 steam per cent. on cane for heating of syrup and molasses, making the total consumption at this station 12·5 per cent. on cane.

The loss in steam pipes, leaky traps, etc., is taken as 0·5 steam per cent. on cane.

For concentration to other degrees Brix and for effects of 3, 4, and 5 cells, results of the computation made as above are as below.

CONSUMPTION OF STEAM PER CENT. ON CANE UNDER DIFFERENT CONDITIONS.

Syrup concentrated to	55° Brix.			60° Brix.			65° Brix.		
Number of effects	3	4	5	3	4	5	3	4	5
Power	4·1	4·1	4·1	4·1	4·1	4·1	4·1	4·1	4·1
First heating of juice ..	15·4	15·4	15·4	15·4	15·4	15·4	15·4	15·4	15·4
Reheating of juice	2·8	2·8	2·8	2·8	2·8	2·8	2·8	2·8	2·8
Evaporation	33·1	24·8	19·9	33·9	25·4	20·4	34·7	26·0	20·8
Graining	18·2	18·2	18·2	15·1	15·1	15·1	12·5	12·5	12·5
Steam Pipe loss	0·5	0·5	0·5	0·5	0·5	0·5	0·5	0·5	0·5
Total	74·1	65·8	60·9	71·8	63·3	58·3	70·0	61·3	56·1

The above tabulation may be used as a basis of computing the steam consumption in those installations which either use a pre-evaporator or separate steam from a cell of the evaporator proper. Some examples are given below, all referred to syrup at 65° Brix, the constant,

$$35 \cdot 3 = 4 \cdot 1 + 15 \cdot 4 + 2 \cdot 8 + 12 \cdot 5 + 0 \cdot 5,$$

which appears in all the examples, being the value of O in the general equation developed above (p. 329).

1. Quadruple effect, syrup at 65° Brix, first heating of juice by steam separated from first cell.

Consumption of steam is, $\frac{104 - 15 \cdot 4}{4} + 35 \cdot 3 = 57 \cdot 4$ per cent. on cane.

2. Quadruple effect, syrup at 65° Brix, first heating of juice by steam separated from second cell, reheating and graining by steam from first cell.

Consumption of steam is $\frac{104 - (2 \times 15 \cdot 4) - 12 \cdot 5 - 2 \cdot 8}{4} + 35 \cdot 3 = 49 \cdot 8$ per cent. on cane.

3. Quintuple effect, syrup at 65° Brix, first heating of juice by steam separated from second cell, reheating and graining by steam from first cell.

Consumption of steam is, $\frac{104 - (2 \times 15 \cdot 4) - 12 \cdot 5 - 2 \cdot 8}{5} + 35 \cdot 3 = 47 \cdot 1$ per cent. on cane.

4. Pre-evaporator supplying first heater, quadruple effect and syrup at 65° Brix.

Consumption of steam is, $\frac{104 - 15 \cdot 4}{4} + 35 \cdot 3 = 57 \cdot 4$ per cent. on cane.

5. As in 4, but with double effect pre-evaporator.

Consumption of steam is, $\frac{104 - (2 \times 15 \cdot 4)}{4} + 35 \cdot 3 = 53 \cdot 6$ per cent. on cane.

6. Pre-evaporator supplying heater and re-heater, syrup at 65° Brix, quadruple effect supplying steam for graining from first cell.

Consumption of steam is, $\frac{104 - 15 \cdot 4 - 2 \cdot 8 - 12 \cdot 5}{4} + 35 \cdot 3 = 53 \cdot 7$ per cent. on cane.

These different systems, as well as an isolated triple and quadruple effect system are illustrated diagrammatically in *Fig* 186, those bodies which receive virgin steam being indicated by a cross.

In the computation given above the total amount of juice treated is taken as 130 per cent. on cane, which is very much greater than that which generally obtains. The total consumption of steam for any system will be roughly proportional to the actual quantity of juice, so that it is easy to pass from the quantities above to any other assumed quantity of juice. The writer adopted the data used as representing an extraction of 99 per cent. of the sugar in the cane, with the object of showing that even with only 11 per cent. fibre in cane the bagasse can supply steam to operate the factory when the steam is utilized at great economy.

In the Chapter on *Bagasse* it is shown from experimental results that each per cent. of fibre in the cane can supply steam equal to 4·5 per cent. on cane. In case 3 above, which may be taken as one of extreme economy, the consumption was computed as 47·1 per cent. on cane; that is to say, with exceptionally low fibre and exceptionally high dilution extra fuel may be necessary. With less economical schemes for steam utilization extra fuel must be used or extraction sacrificed unless there is more fibre in the cane.

In the computation above a consumption of 30 lbs. steam per I.H.P.-hour was accepted, of which 25 lbs. was taken as recoverable in exhaust. These figures, based on trials made by the writer and on textbook statements, refer generally to engines not less efficient than a Corliss, to live steam pressures of 90–100 lbs., and to exhaust pressures of 0–5 lbs. With 5 lbs. steam pressure only, the first cell of a quadruple will boil at about atmospheric pressure and steam at this pressure will have only a limited application, unless heating surfaces of exaggerated dimensions be installed in the heaters and vacuum pans. Under such conditions steam may be separated from the first cell to perform a portion of the heating of the juice, say to 180°–190° F., and the balance will have to be done with steam at single effect in a separate heater.

It may happen, too, that the engines are uneconomical and badly arranged, the result being that so much exhaust is produced that difficulty is experienced in its utilization. In this case economy is impossible without rearrangement of the power plant.

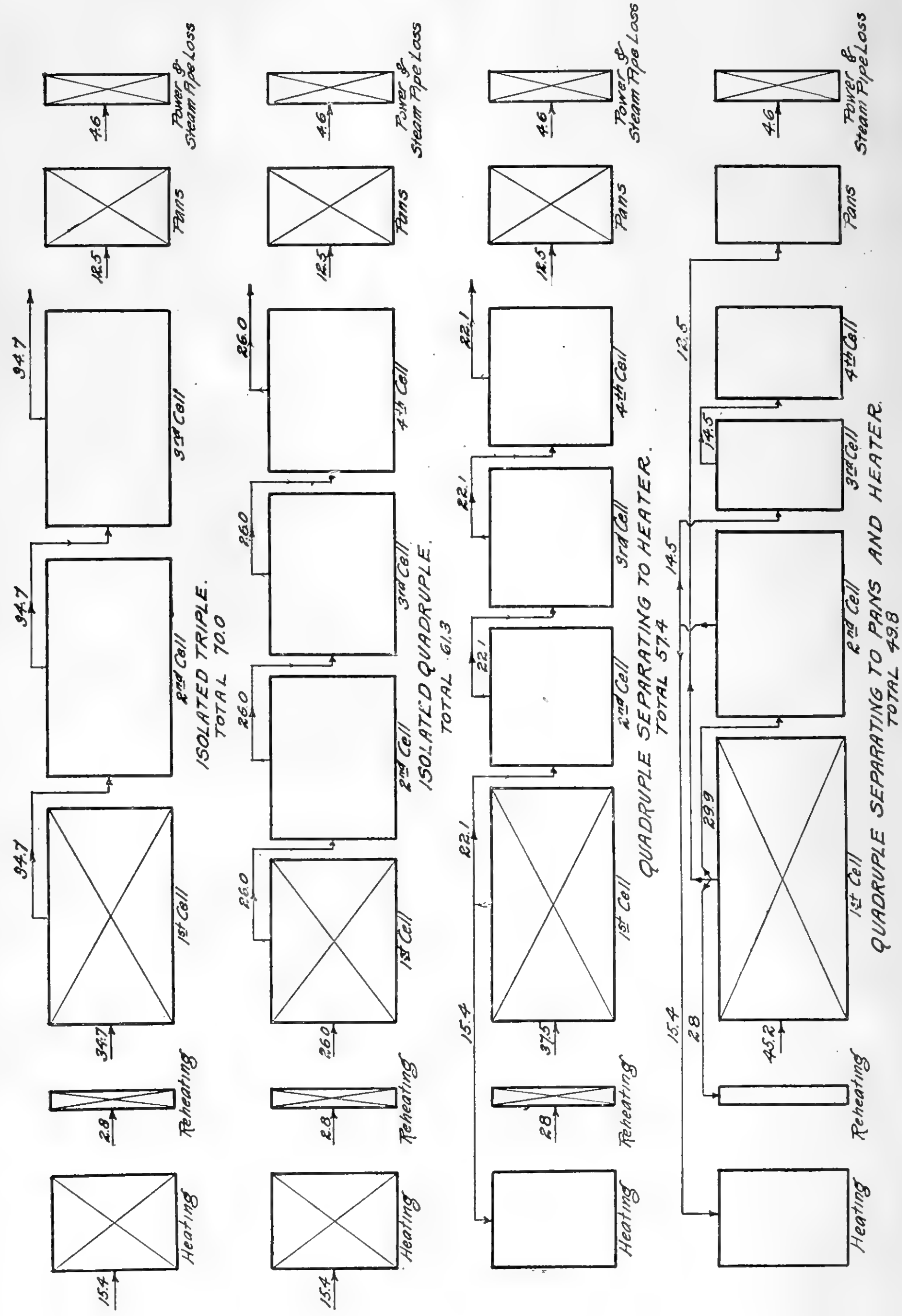
ISOLATED TRIPLE.
TOTAL 70.0
Heating
15.4
Reheating
2.8
1st Cell
34.7
34.7
2nd Cell
34.7
3rd Cell
34.7
Pans
12.5
Power & Steam Pipe Loss
4.6
ISOLATED QUADRUPLE.
TOTAL 61.3
Heating
15.4
Reheating
2.8
1st Cell
26.0
26.0
2nd Cell
26.0
3rd Cell
26.0
4th Cell
26.0
Pans
12.5
Power & Steam Pipe Loss
4.6
QUADRUPLE SEPARATING TO HEATER.
TOTAL 57.4
Heating
15.4
Reheating
28
1st Cell
37.5
22.1
2nd Cell
22.1
3rd Cell
22.1
4th Cell
22.1
Pans
12.5
Power & Steam Pipe Loss
4.6
QUADRUPLE SEPARATING TO PANS AND HEATER.
TOTAL 49.8
Heating
15.4
Reheating
2.8
1st Cell
45.2
29.9
2nd Cell
14.5
3rd Cell
14.5
4th Cell
12.5
Pans
Power & Steam Pipe Loss
4.6

Fig. 186

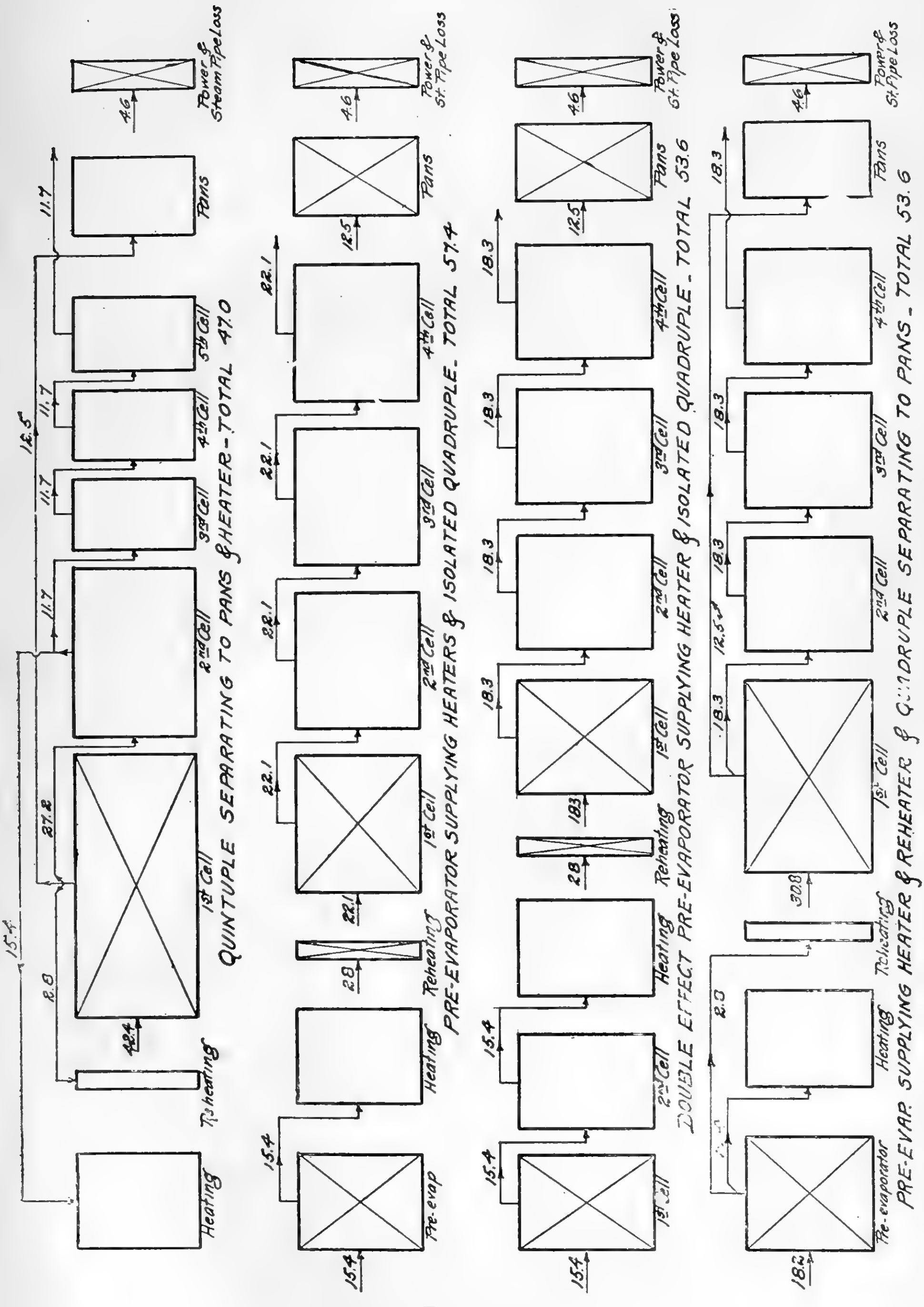
QUINTUPLE SEPARATING TO PANS & HEATER - TOTAL 47.0
Heating
Reheating
42.4
8.8
15.4
1st Cell
27.2
2nd Cell
11.7
3rd Cell
11.7
4th Cell
11.7
12.5
5th Cell
11.7
Pans
4.6
Power & Steam Pipe Loss
PRE-EVAPORATOR SUPPLYING HEATERS & ISOLATED QUADRUPLE. TOTAL 57.4
15.4
Pre-evap
15.4
Heating
2.8
Reheating
22.1
1st Cell
22.1
2nd Cell
22.1
3rd Cell
22.1
4th Cell
22.1
12.5
Pans
4.6
Power & St. Pipe Loss
DOUBLE EFFECT PRE-EVAPORATOR SUPPLYING HEATER & ISOLATED QUADRUPLE. TOTAL 53.6
15.4
1st Cell
15.4
2nd Cell
15.4
Heating
2.8
Reheating
18.3
1st Cell
18.3
2nd Cell
18.3
3rd Cell
18.3
4th Cell
18.3
12.5
Pans
4.6
Power & St. Pipe Loss
PRE-EVAP. SUPPLYING HEATER & REHEATER & QUADRUPLE SEPARATING TO PANS. TOTAL 53.6
18.2
Pre-evaporator
2.3
Heating
Reheating
30.8
1st Cell
18.3
12.5
2nd Cell
18.3
3rd Cell
18.3
4th Cell
18.3
Pans
4.6
Power & St. Pipe Loss

FIG. 186

If under these conditions the back pressure be raised so as to give better service from the steam, the admission of steam to the cylinders will also have to be increased, and a greater production of exhaust steam obtains, a result which again limits the economy, unless there is sufficient heating surface in the vacuum pans and heaters. In such cases as these two methods of obtaining increased economy are possible : the initial boiler pressure may be increased, so that a high back pressure may be used without augmenting the actual quantity of the exhaust steam ; or a pre-evaporator may be installed, which produces steam at the normal back pressure of the factory, and if there be not already an excess of back pressure steam the production of steam from the pre-evaporator may be carried to the point where the low pressure steam begins to be in excess of that which can be utilized.

The most rational and complete system of the economical utilization of steam is obtained by carrying the exhaust pressure high enough to do the required work at all stations, and at the same time increasing the boiler pressure, so that a surplus of exhaust does not result. With an initial pressure of 150 lbs. and a back pressure of 30 lbs. per sq. in., the consumption of steam per H.P. will not be more than with 90 lbs., and 5 lbs. in the live and exhaust lines. With this pressure a quintuple effect with steam separated from the first and second bodies, as in case 3 above, is indicated as the most convenient scheme, for all the steam used in heating and boiling will be delivered to the first cell of the quintuple and all single effect operations eliminated. In this scheme a high pressure battery of boilers and a low pressure battery become convenient, the low pressure main and the engine exhaust being united.

The position of the pre-evaporator is also sometimes misunderstood. It may be regarded as a device for producing exhaust steam in such quantity that the pre-evaporator exhaust added to the engine exhaust is just sufficient to do all the requisite heating and evaporation. The more work that is done by the pre-evaporator the less is the total steam consumption, and hence if the consumption of steam in the engines is reduced, the greater is the opportunity for economy by the use of the pre-evaporator. In such a case the statement that engine economy is useless since all the exhaust is utilized loses its validity.

The whole of the above section has been written with reference to raw sugar manufacture, and does not refer to plantation white sugar making. The steam consumption here increases, and Bolk[12] has estimated this increase as 21 per cent. over and above that required in raw sugar manufacture. The items where an increase is shown are in the vacuum pans following on the use of water in washing the sugars, in steam used in purging the sugar at the centrifugals, in filtration of the syrup, and in the increased number of centrifugals necessary.

Step-up Heating.—The exigencies of manufacture require that the juice be heated to 212° F., a temperature which usually only the steam from the first effect can reach. The juice may, however, be heated in a series of steps, say from 80° F. to 120° F., by steam separated from the last body, from 120° F. to 150° F., by steam from the penultimate body, and so on. Although the economy is real, complication of apparatus and increased heating surface necessary have prevented any extended development of the method. The use of juice, however, in surface condensers attached to the last body of the evaporator is quite common in Mauritius ; not only is heat economy obtained, but excellent entrainment traps also are provided, with economy in the use of injection water.

Effect of Initial Density of Juice on the Steam Consumption.—In making an estimate of the steam consumption, it is at once evident that this will vary with the initial percentage of solids in the juice, with the percentage of solids to which this juice is evaporated before the graining at single effect takes place, and the equivalent percentage of solids to which the final concentration is carried, if done in one process. Let B_j, B_s and B_m be the percentage of solids in the juice, syrup, and massecuite, and let there be a multiple effect of n effects operated without separation of steam: then the total consumption of steam in the multiple effect or pans is

$$\frac{B_s-B_j}{nB_s}+\frac{B_m-B_j}{B_m}-\frac{B_s-B_j}{B_s} \text{ which reduces to}$$

$$\frac{n\,B_m\,B_j-n\,B_s\,B_j+B_m\,B_s-B_m\,B_j}{n\,B_m\,B_s}$$

If the consumption of steam is constant, when B_j changes to B'_j,

$$n\,B_m\,B_j-n\,B_s\,B_j-n\,B_m\,B_j=n\,B_m\,B'_j-n\,B_s\,B'_j-n\,B_m\,B'_j$$

whence $n=\dfrac{B_m}{B_m-B_s}$.

Accordingly when B_m and B_s are constant, the consumption of steam is constant for one particular value of n, and independent of change in the value of B_j. Taking B_m to refer to the first and subsequent boilings, its value may be approximated at 96; then, when B_s has the values below, the values of n or $\dfrac{B_m}{B_m-B_s}$ are:—

B_s	n	Bs	n
45	1·882	60	2·667
50	2·087	65	3·097
55	2·341	70	3·692

With syrup at 65° Brix, and with triple effect evaporation, there will be a nearly constant consumption of steam. When, however, the steam is used more economically, a lower consumption will be found as the degree Brix of the juice or value of B_j decreases. Actually, however, within such limits as occur, the total consumption of steam does not vary much when expressed as a percentage on the same weight of juice; its distribution between evaporators and pans, however, varies very largely.

Heat Losses in Evaporators and in the Sugar Houses generally.—As regards steam pipes, the following table prepared by the John Manville Co., referred to external air at 72° F., may be taken as in accord with independent observations:—

Heat transmitted B.T.U. per hour, per sq. ft., at the Stated Pressures in lbs. per sq. in.

Covering.	0	25	50
Bare	360·0	576·0	876·0
Asbestos cell, 1 in.	77·4	100·8	127·2
Air cell, 1 in.	111·6	156·0	179·4
Moulded asbestos, 1 in.	97·2	135·6	156·6
Indented „ 1 in.	96·0	133·2	154·4

	100	150	200	250
Bare	1170·0	1284·0	1380·0	—
Sponge-filled asbestos, 1 in.	120·6	133·8	142·8	151·8
,, ,, ,, 2 in.	94·2	104·4	111·6	118·2
,, ,, ,, 3 in.	85·2	95·4	102·6	108·6
Magnesia ,, 1 in.	132·6	147·0	156·0	166·2
,, ,, 1½ in.	119·4	132·6	142·2	150·0
,, ,, 2 in.	100·2	111·6	119·4	126·6

It will be noted that while the loss with bare pipes increases rapidly as the pressure rises, the loss is subject to small variation with covered pipes; that is to say, the dominant factor is the resistance of the covering, precisely as the scale in evaporator tubes dominates the rate of heat transference there.

A quadruple effect evaporator will expose about 0·3 sq. ft. area for each 1 sq. ft. of heating surface: the temperatures of each unit may be taken as 215° F., 200° F., 180° F., 130° F., so that if the external air be 80° F. the temperature differences are 135° F., 120° F., 100° F., and 50° F. From the data on page 337 one sq. ft. of bare pipe at 212° F. loses per hour 350 B.T.U. With external air at 72° F., the loss per sq. ft. per hour in the evaporator will then be in each cell of the order 350, 300, 250, 125 B.T.U.

If a computation of the water evaporated per lb. of steam supplied be made on the lines indicated earlier in this chapter, a difference of about 0·15 lbs. water per lb. of steam supplied will be found. If 1 lb. steam enter the apparatus for every 5 lbs. of cane, the loss indicated is, steam 3 per cent. on cane; but this loss is recoverable at quadruple effect, and is hence reduced to 0·75 per cent. on cane. If, however, owing to radiation losses, the evaporator is unable to deliver syrup of the proper density, the loss has to be recovered at single effect and remains as before of the order 3 per cent. on cane.

A sugar factory will have about 50 sq. ft. pipe area in both live and exhaust lines per ton-cane-hour. When protected, each sq. ft. in live and exhaust will lose as an average about 100 B.T.U. per hour, or 10,000 B.T.U. per ton of cane, or roughly 0·5 steam per cent. on cane. This loss should be regarded as a minimum. With unprotected pipes the exhaust line will lose about 400 B.T.U. per hour, or steam 1 per cent. on cane, and the live steam lines will lose about 1,200 B.T.U. per hour, or steam 3 per cent. on cane.

Juices entering the settling tanks at 212° F. will cool down to 170° F. in bare tanks, and not below 200° F. in well protected tanks. The unnecessary loss of 30° F. represents, with juice equal in weight to cane, a loss of steam from 2·5 per cent. to 3 per cent. on cane.

The feed water to the boilers can be returned through a closed system, the temperature of which depends on the pressures of steam used in pans and evaporators. Nearly always an open system is found, and an unnecessary loss of 50° F. is quite common. With a total production of steam 50 per cent. on cane, this loss amounts to about 2 per cent. to 2·5 per cent. steam on cane.

The Working Capacity of Evaporators.—Koppeschaar,[13] bringing together the observations of Jelinek, Claassen, Brunnings and himself, gives the following as average working conditions in quadruple effect evaporators; his figures are here transposed into British units and the writer's nomenclature:

C_1	233·6	$C_1 - C_2$	12·6	K_1	437
C_2	224·0	$C_2 - C_3$	16·2	K_2	338
C_3	204·8	$C_3 - C_4$	21·6	K_3	250
C_4	183·2	$C_4 - VS_4$	39·6	K_4	137
VS_4	143·6	$C_1 - VS_4$	90·0	K_m	240

Taking the latent heat of water as 1,000 B.T.U., the evaporation in terms of water evaporated per sq. ft. per hour will be

$$\frac{K_1\,(C_1 - C_2)}{1{,}000} = \frac{K_2\,(C_2 - C_3)}{1{,}000} = \text{etc.} = 5{\cdot}4$$

An evaporation equal to that indicated above is very generally accepted as indicative of actual working conditions. The question is, however, much more complicated. The experiments quoted in the earlier portion of this chapter show that the capacity or rate of evaporation is controlled by the temperature difference and by the position of the temperature difference in the thermometric scale, and accordingly, when the capacity of an evaporator is spoken of, the conditions under which it operates should be specified. A second most important factor is the cleanliness of the tubes. This factor is controlled by the facility with which the juices form scale, a point often beyond the control of the operator, and by the care and attention given to cleaning. An evaporator worked continuously for several weeks will be found to fall in capacity, and its efficiency can only be maintained by periodic stops for cleaning either by boiling with soda and acid or by brushing, or by a combination of the methods. The third factor controlling the capacity lies in the design, included herein such points as juice circulation, elimination of incondensible gases, and of condensed water, steam circulation, height and diameter of tubes.

On actual tests on well-designed quadruple vertical submerged tube apparatus operated with steam at 5 lbs. gauge pressure, and with 26 ins. vacuum in the last body, the writer has found at the end of a week's continuous operation a rate of evaporation of 9 lbs. per sq. ft. per hour, when the juice was admitted at the temperature prevailing in the first body. This figure is much higher than is usually accepted in design, but it has been, and can be, obtained in apparatus which are regularly cleaned every week, and with juices which show no abnormal tendency to scale. If, however, the steam pressure be allowed to fall below the stated figure, or if the vacuum be not maintained, so high a duty is not obtained. The data recorded earlier in this chapter indicate the extent to which the rate of evaporation will fall off with variation from these standards.

As regards the horizontal submerged tube apparatus, the writer has only been able to experiment with one, and under such conditions that the cleanliness of the tubes was not under control. The results found were lower than those quoted above, but on the other hand Kerr has found, referred to the same pressure and vacuum as selected by the writer as a standard, a maximum evaporation of 9·55 lbs. per sq. ft. per hour.

The third common type of evaporator, the horizontal film, has a distinctly higher rate of evaporation when it operates satisfactorily; that is to say, when the distributing system is not choked by scale, or when some minor accident or defect does not develop in the pumps. Kerr found a maximum value of 16·45 lbs. per sq. ft. per hour at 5 lbs. gauge pressure, and 26 ins. of vacuum; the writer obtained a value of rather over 9 lbs., with steam at less than 1 lb. gauge pressure and 27 ins. of vacuum. These results can be shown to be in reasonable agreement following on the observations given earlier in this chapter. The capacities of apparatus with other numbers of effects in series may be obtained from comparison with the quadruple figures recorded here. Probably double and triple effects will have rather larger capacities than calculated, the reverse holding with quintuple and sextuple apparatus.

The figures quoted here are rather of the nature of maxima, and the writer does not wish to be taken as advising these as a basis of design.

Development of the Practice of Evaporation.—The earliest method used was doubtless evaporation in vessels over a direct fire. This method survived on the large scale till well into the nineteenth century in the copper wall so well described by Ligon, Dutrône and other early writers. It is still to be found in parts of the Southern States, and South America; and in British India very large quantities of sugar are thus produced at the present time. The final stage of the direct fire-heated system is to be found in Fryer's concretor (patents 418 of 1865 and 2144 of 1868), which was once in very extended use. In this system the juice travelled in a thin stream in a zigzag course over a heated surface. It was finally concentrated almost to dryness in a rotating cylinder, in which were revolving scrolls. The resulting material was shipped under the name of concrete sugar without separation of the molasses.

Steam as the heating agent first appears in Wood's patent (1492, 1785), which employs a double-bottomed apparatus. This was followed by the introduction of a tubular heating surface in Taylor's patents (4032, 4197, 1816), which, in the eliminator or skimming pan, survives almost unchanged. The substitution of the coil for the tubular heating surface was due to French engineers. An attempt to improve on steam is seen in Wilson's patent (4095, 1817), which proposes the circulation of heated oil. A variant of oil is the use of concentrated salt solutions as found in Ure's patent (6165, 1831). Heated oil is still used in the manufacture of basket sugar in the Orient under Miller's patent (22438 of 1899).

Increased rapidity of evaporation with increased surface is recognised in Wyatt's patent (4130, 1817); he caused spheres or discs to rotate partly immersed in the liquid. This idea was developed further by Cleland (patent 5520, 1827) and Aitchison (5848, 1829), who made the rotating elements hollow and admitted steam to their interior. This type of evaporator was further developed by Bour (patent 523 of 1854), who employed opposed hollow spherical caps united along their bases and carried on a horizontal rotating shaft. Another form took the shape of a helix with very flat angle, rotating about a horizontal axis. The form most used is that indicated in *Fig.* 187, and known as a Wetzel. It is contained in patent 3031 of 1867 issued to Bourron, though in use before this date. Many years later these devices have been proposed for use in the vacuum pan, as in McNeil's patent (8814 of 1899), which follows Bour's model, and in Czapiowski's patent (15031 of 1902), which resembles the Wetzel pattern. All the above devices for film evaporation employed moving heating surfaces; a stationary heat surface, over which the juice flows in a film, is first found in Dihl's patent (3965, 1815), and is quite efficiently developed in Cleland's (4696, 1822). Since then film evaporation with fixed heating surfaces has formed a frequent subject of invention, as recently found in the patents of Yaryan (14162 of 1886); of Lillie (3006 and 12391 of 1888, 11686 of 1890); of Meyer and Arbuckle (4218, 9078 and 19962 of 1903); and of Kestner (24024 of 1899).

Injection of hot air is included in many early patents, the first being that of Knight and Kirk (4674, 1822). Under Kneller's patent (5718, 1828) this system obtained some extension.

The oscillating evaporator or *chaudière à bascule,* invented by Guillon early in the nineteenth century, survives as a homestead appliance in the south of the United States.

Evaporation under reduced pressure is due to Howard (patent 3754, 1813). This patent ranks amongst the most valuable and important ever issued. The first pans were very shallow apparatus. Finzel's patent drawing (12808, 1849) shows a pan proportioned as in use now. Robinson's patent (10345, 1844) claims a submerged horizontal tube pan. A vertical submerged tube pan such as is now known as a calandria pan is claimed as new in Walker's patent (14141, 1852). The first pans employed in the raw sugar industry were those at Vreed-en-Hoop in Demerara, and at Plaquemines in Louisiana, both of which were erected in 1832. The vacuum pan reached Java in 1836 and Mauritius in 1844.

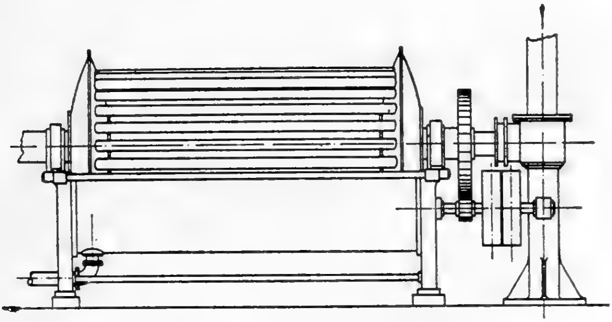

FIG. 187

The earliest conception of the multiple use of steam appears in Cleland's patent (5394, 1826). He proposed to use the steam given off open pans to heat a second portion of juice. In the following year a patent was taken out by Stein (5583, 1827) for the distillation of alcohol in quadruple effect. Pecquer (French patent 6686, 1834) described a quadruple effect for use in sugar works. He shows a system of four superimposed or piled bodies of very crude design. A French patent (8719, 1837) issued to Degrand introduces the term "double effect." He used an air-cooled surface condenser, and employed the hot air in sugar-drying stoves. This arrangement prepared the way for the Derosne double effect,* which is described in the British patent issued to Pontifex (7082, 1836). In this arrangement an evaporative surface condenser was attached to the vacuum pan, the cooling medium being syrup in a refinery, or cane juice in a raw sugar house. Besides claiming this arrangement, the patent shows a second combination in which the heated and partly evaporated juice from the condenser is conducted to a pan heated by live steam, the vapours from which pass to the vacuum pan proper. Double effect evaporation and heating of juice are hence herein contained. The Derosne combination was for a time widely used. It was installed at Amistad in Cuba in 1840, in Bourbon in 1839 and in Surinam in 1843. It was operating in Barbados as late as 1900.

---

* It seems that Derosne had nothing to do with the invention of the system known as his. Degrand successfully sued him in the French courts, and was declared the lawful inventor.

There is a statement due to Rillieux in Senatorial Document No. 50, 1845, that he conceived his system of multiple effect evaporation in 1832, though Horsin-Déon, who was Rillieux's assistant, gives the date as September, 1830. His first patent is U.S. 3237, 1843. It shows two Howard vacuum pans connected in series. His second patent (U.S. 4879, 1846; U.K. 13286, 1850) describes for the first time an apparatus functioning in what is now known as multiple effect. The combination consisted of four bodies, of which the fourth was a graining pan receiving steam separated from the first body. The first three bodies were in series. The third and fourth bodies were connected to the condenser, the latter being capable of isolation when it was necessary for it to discharge. His design followed the horizontal fire tube boiler. The first apparatus erected at Letorey's plantation in Louisiana did not give satisfaction, but from the second erected at Myrtle Grove, belonging to Benjamin and Packwood, success was assured. By 1851 as many as fifteen plants were in operation in Louisiana. Others were early erected in Cuba at Alava, Ascuncion, Santa Teresa, Minerva, and Julia, in Mexico, and in Peru. Rillieux took into his confidence a German engineer, Andrœa, who was then studying steam navigation on the Mississippi. He, without Rillieux's knowledge or consent, sent copies of the drawings to Tischbein in Germany, who completely failed to understand them. Afterwards Tischbein sold the drawings to Cail, who also did not completely grasp the principle and method of operation. Rillieux's apparatus was first described in Europe by Dureau,[14], and in 1852 Robert, a French engineer, constructed the first vertical submerged tube apparatus at Seelowitz in Moravia. Horsin-Déon, however, states that Rillieux had given Andrœa a pencil sketch of a vertical tube apparatus, suggesting that it would be more convenient for cleaning where incrustations were likely to occur. It was not, however, till about 1870 that the method really began to be adopted, and then it was mainly due to Rillieux, who corrected many faults that had been made by the earlier European builders. The first multiple in the cane sugar industry outside of the New World was that at Minchin's diffusion house at Aska, India, erected before 1870, followed by Bene Mazar in Egypt, erected in 1872. In Java the first one was used at Djattiwangi in 1876, and they reached Demerara about 1880. During this period Rillieux was busy in conjunction with Lexa in developing the system of separating steam from a cell early in series while Pauly and Greiner were introducing the pre-evaporator system, the first one being installed in 1887. British patents on extra or separated steam were granted to Robertson and Ballinghall (15698 of 1890, and 11296 of 1892), and one for the pre-evaporator to Alliott (5496 of 1895). At these dates the systems mentioned had become routine practice in Europe. The introduction of the Welner-Jelinek horizontal submerged tube apparatus took place in 1878. The other developments of importance are those due to Yaryan, Lillie and Kestner, dealing with specialized types of apparatus. These as well as other developments after the establishment and recognition of the principle are discussed elsewhere.

The Actual Apparatus used in Multiple Effect Evaporation.—The apparatus in use fall into two main classes; the submerged tube or bulk, and the film evaporators. These in turn may be subdivided into vertical tube and horizontal tube. Each type again has been the subject of many inventions, the same idea appearing repeatedly with no real change. In the following section the vertical submerged tube or "Standard" type is described in detail. What is written of the accessories is applicable to the other types also.

Vertical Submerged Tube Evaporator.—A cell of this type, *Fig.* 188, consists of a cast-iron or steel shell of over-all height up to twenty feet, and of diameter in the largest units yet built in sugar factories up to 15 feet; very large plants of 28 ft. diameter are in use in other industries. The height is independent of the diameter of the apparatus.

The shell is divided into two non-communicating parts by the tube plates *a a* and by the tubes *b b*; the space between the tube plates and around the tubes forms a chamber, the calandria, into which steam from the main or a previous vessel is admitted. The space above the upper tube plate is called the vapour space, *c*, and is continuous through the tubes, with the space below the bottom tube plate. This space is dead space, and has no evaporating function, but is necessary as a part of the structure of the apparatus. At *d* is seen the pipe conducting the vapour to the next cell. At *e* are indicated the pipes which remove the condensed water from the calandria, and at *f* pipes which vent the incondensible gases from the calandria to the vapour space to the next effect, or even directly to the condenser. At *g* is shown the pipe which conducts the juice to the next effect, at *h* the juice inlets, at *j* the entry of steam to the calandria, in this case shown as a steam belt surrounding the calandria. At *k* is a gauge glass indicating the level of the liquid.

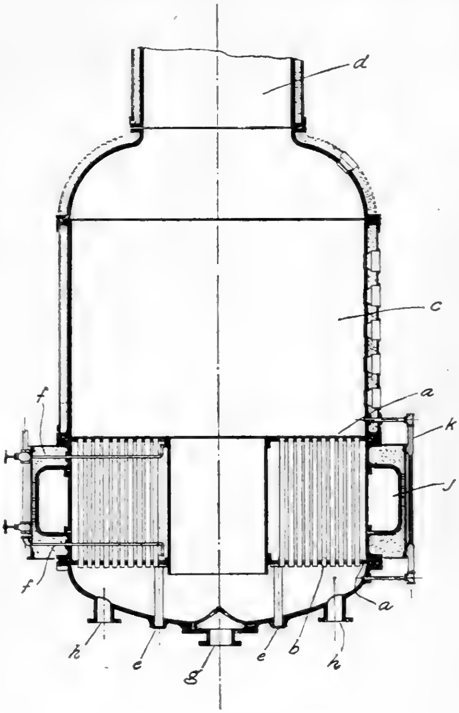

FIG. 188

Steam Distribution.—The steam may enter at the side at one place only, or the vapour pipe may divide into two or more branches. The steam belt may be arranged round the calandria and may be separated from the tubes by a slotted or perforated partition. A flared nozzle to the steam pipe and the omission of tubes so as to form steam lanes is claimed in Maxwell's patent (12809, 1889), and both of these have become standard practice. Steam distribution is also sometimes obtained by the use of internal baffles, whereby a definite passage is given to the steam.

Another method of steam distribution is seen in Vivien and Dujardin's patent (2286, 1884), *Fig.* 189, in which the centre lines of the vapour pipes are coincident with the vertical axes of the cells. This is the first British patent illustrating the modern form of evaporator.

The velocity of steam in vapour pipes is usually calculated at from 50 to 100 feet per sec., and 100 to 200 feet per sec. in the pipe to the condenser.

Accordingly, the diameter of the vapour pipes should increase from cell to cell. In order to effect standardization and to reduce initial cost, some apparatus are found with equal-sized vapour pipes. If a uniform velocity of the vapour is decided on, the areas will depend on what are the conditions assumed as obtaining in the evaporator. Based on an evaporation of 7 lbs. per sq. ft.-hour and velocities of 50 ft. and 150 ft. to the condenser, the vapour pipes of a quadruple should be about: 1–2, $0{\cdot}21\,a^{\frac{1}{2}}$; 2–3, $0{\cdot}24\,a^{\frac{1}{2}}$; 3–4, $0{\cdot}30\,a^{\frac{1}{2}}$; 4-condenser, $0{\cdot}39\,a^{\frac{1}{2}}$, where a is the heating surface in the whole apparatus.

Size of Tubes.—When evaporators of the vertical submerged tube type were first built European makers adopted a 5 c.m. tube, and British makers followed with a 2-inch one. The length of tube was at first exaggerated, and early examples may be found with a tube length of 8 feet. At the present time 5 feet or thereabouts seems to be standard practice. At the same time there is a tendency to decrease the diameter of the tube, European makers often adopting a two or two and one-half centimetre tube, but British and American firms seldom use one less than one and three-quarter inch. The adoption of a smaller tube increases the heating surface, which can be arranged in vessels of equal diameter, and may possibly increase the transmission of heat since the mean distance of the juice from the partition decreases. The increase in heating surface is indicated in the annexed table, and it may be remembered that the volume of juice contained in vessels of equal diameter is independent of the diameter of the tubes, provided the pitch vary with the diameter.

HEATING SURFACE AND TUBE DIAMETER.

Diameter, inches.	Pitch, inches.	No. of tubes per sq. ft. of tube plate.	Heating surface per c. ft. of calandria.
2·00	2·50	27	13·9 = 1·00
1·75	2·25	33	15·0 = 1·08
1·50	2·00	42	16·3 = 1·17
1·25	1·75	55	17·8 = 1·28
1·00	1·50	74	19·5 = 1·40

Juice Distribution and Circulation.—In very many apparatus the juice is introduced above the upper tube plate, the pipe ending flush with the side of the shell. This method is, the writer believes, quite wrong. Conversely, the juice should enter at the bottom and rise through the tubes; this introduction may be made by means of a perforated pipe or at a number of places symmetrically located with reference to the axis of a cell. The former method is specifically claimed in Smith's U.S. patent (881351, 1908).

In order to obtain a circulation, apparatus are constructed with a large tube or down-take, the route of the juice being up through the tubes and down through the down-take. This tube is usually located centrally, but in some designs is placed eccentrically, and in others takes the form of a segment cut out of the calandria. In other designs the circulating tube takes the form of an annular space between the calandria and the shell, this type being referred to as a drum calandria, as indicated in *Fig.* 189.

Circulation may also be assisted by shaping or bellying the saucer, as seen in Fletcher's patent (13857 of 1894), or by inclining the calandria, as found in McNeil's patent (8763 of 1900).

A system of circulation found in some designs is that known as *progressive* evaporation, in which the liquid is constrained to travel in a definite path. This system is first found in British patent 3965, 1816, taken out by Dihl for an unnamed inventor. It appears in Chapman's patents (1752 and 2511 of 1888) and in Foster's (13284 of 1890), where the flow is defined by vertical partitions alternately above the upper and below the lower tube plate of a vertical submerged tube apparatus.

Mechanical circulation as obtained by a screw propeller located below the lower tube plate is found in Fletcher's patent (14164 of 1886), but this means does not seem to have come into common use.

Distribution of the liquid over the heating surface in thin layers as a spray, or by other means, forms what is known as film evaporation. It appears first in Cleland's patent (4696, 1822), and is also shown in Rillieux's first patent (U.S. 3237, 1843). Since then the principle appears in many designs, particularly in those of Yaryan, Lillie, and Kestner (q.v.), and more recently in that of Meyer and Arbuckle (4212, 7078, 19962, of 1903), who employ a perforated pipe rotating in a horizontal plane above the upper tube plate of a vertical submerged tube apparatus.

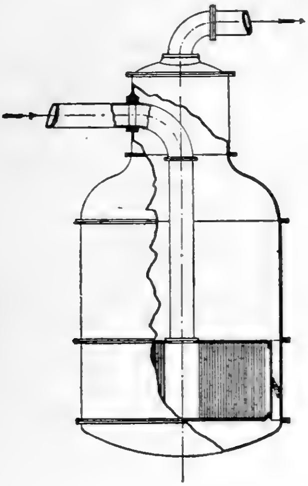

FIG. 189

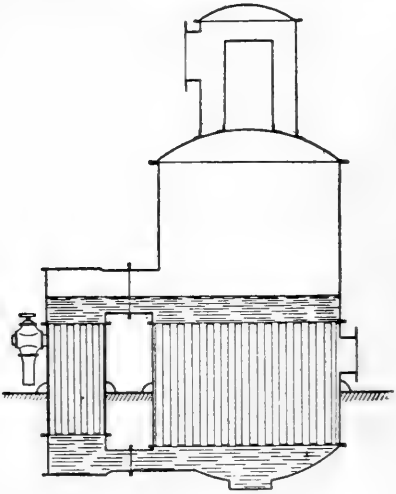

FIG. 190

Circulation by a localized use of high pressure steam is found in Heckman's circulators, which consist of a supplementary calandria, as shown in *Fig.* 190. In Rohrig and Koenig's design, the live steam is used in a small annular tubular cluster arranged round the vertical axis of a cell.

Incondensible Gases.—In the process of evaporation a certain amount of incondensible gas is formed; some air enters with the juice, and some leaks into the apparatus. This accumulation of gas both retards the rate of boiling and causes corrosion of the tubes, so that it is necessary to remove it as fast as possible. In the first calandria there is generally a pressure, so that the gas can be vented to the air; as the heating steam contains but little air, generally all that is necessary is to expel the air present in the calandria when commencing work. In the second and subsequent calandrias communication is made by means of pipes from the interior of the calandria to some place where the pressure is lower, as, for example, to the vapour space of the same cell. Various arrangements of piping are shown in *Figs.* 191, 192 and 193.

As arranged in *Fig.* 191, the pipes lead directly from the upper tube plate to the vapour space of the same cell and end flush with the upper tube plate. In this arrangement the degree of opening is not under the control of the operator. As shown in *Fig.* 192, perforated pipes pass through the calandria; the collecting pipe passes through the side of the apparatus and on to the calandria of the next cell; a valve allows the opening to be regulated. As indicated in *Fig.* 193, collection takes place at the top and the bottom of the calandria, the collecting pipes uniting into one outside the vessel, where a valve is placed. In this arrangement the collection of the gases takes place at a point remote from the steam entry.

The gases are sometimes vented from cell to cell and sometimes direct from any cell to the condenser. In the latter case all the steam which escapes along with the gases is totally lost; and, besides, there will always be observed difficulty in regulation, owing to the large difference in pressure between the condenser and the earlier vessels.

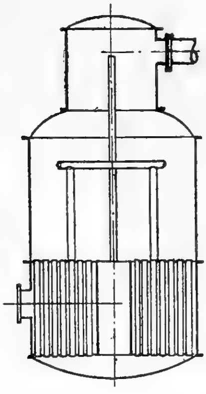

FIG. 191

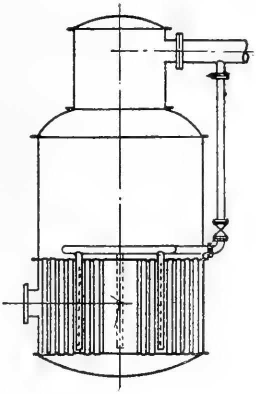

FIG. 192

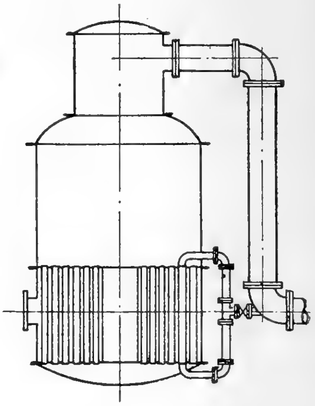

FIG. 193

The loss of steam along with the gases has been given by Claassen,[11] as based on Napier's formula for the flow of gas from an orifice: $G = n F \sqrt{\frac{p}{v}}$ where G is the rate of flow, F the area of the orifice, p the pressure of the escaping gases, v their specific volume, and n a constant. If G is in lbs. per sec., F in sq. ins., p lbs. per sq. in., v cu. ft. per lb., n for circular orifices is about 0·3. Claassen shows that with large openings very serious losses of steam may occur, and for apparatus of 10,000 sq. ft. he advises the following openings:—

First body $\frac{13}{32}$ in.; second body $\frac{19}{32}$—$\frac{25}{32}$ in.; third body $\frac{25}{32}$ in.—1 in.; fourth body $1\frac{3}{16}$ in. He also advises the use of diaphragms, the setting of which is left to the superintendent and not to the workman.

The distribution of the temperature fall and rate of working of a multiple effect apparatus can be controlled by means of adjustment of the valves on the incondensible gas pipes. If the valve on the third vessel be opened wide, communication is established between vapour space 2 and calandria 4.

A rise in the pressure in calandria 4 results, which is *reflected* back to vapour space 3, causing a rise in pressure therein. The result is a greater temperature difference in cell 4 and a more rapid evaporation there and throughout the whole apparatus. The steam which is short-circuited from vapour space 2, however, now only works at triple effect and the economy falls. Similarly, steam may be short-circuited from vapour space 1 to calandria 3, in which case some steam will only operate at double effect. At times, when the last cell is getting foul at the end of a run, the concentration of the syrup and the capacity of the apparatus may be maintained by this means, and generally it will be economical to keep at high density in the syrup and eliminate as much single effect boiling in the vacuum pans as is possible.

Evacuation of the Condensed Water.—The condensed water in the first cell being normally under pressure can flow out by gravity. This water is always separated from the other condensed waters and is used for boiler feed. The water may pass through a trap or inverted syphon to prevent simultaneous loss of steam. If the apparatus is on a sufficiently high level the water can flow directly to the boiler feed tank, otherwise a pump is necessary.

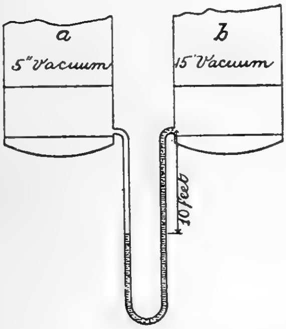

FIG. 194

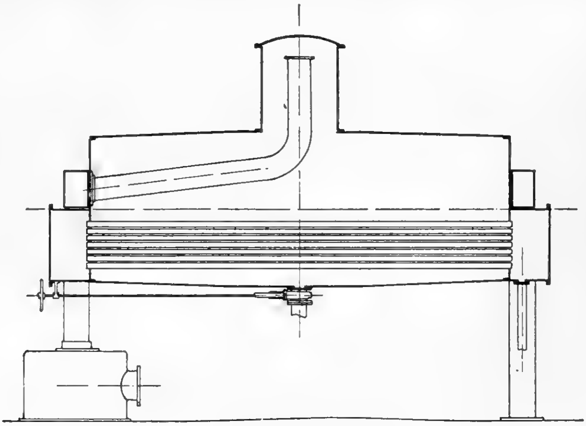

FIG. 195

In the latter cells, which operate at less than atmospheric pressure, the following methods may be adopted :—

(*a*) The water may pass from cell to cell through inverted syphons (Chapman's patent 1752, 2511, 1888). In *Fig.* 194, *a* and *b* represent two cells, in which the vacua are respectively five and fifteen inches, or a difference in pressure equivalent to a ten-foot head of water. If the syphon in this is more than ten feet long a water seal will be formed at the lower part of the U due to the balancing of the two columns of water, and the water will continuously and automatically pass from cell to cell. This system is also applicable to juice circulation.

The "flashing" of the water into steam as it passes to the lower pressure seems to disturb this system, and in actual operation it is found necessary to make the syphon twice as long as the prevailing pressures indicate to be necessary.

(*b*) The water from each cell gravitates to a sealing tank by a fall pipe.

The sealing tank may be on the ground floor if the apparatus is high enough, otherwise it has to be located in a pit. A pump is employed to raise the water from the sealing tank.

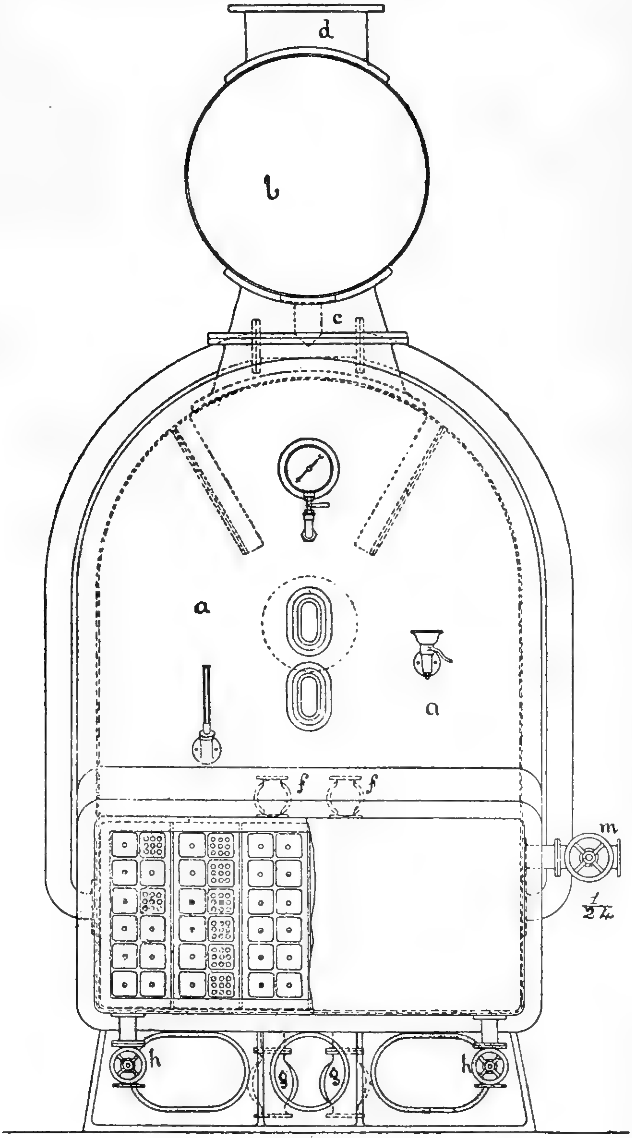

FIG. 196

(*c*) Each cell is supplied with an individual pump. In this case the water from a cell may pass into a receiver connected with the vapour calandria of the one next in series. This receiver is known as a "flash pot," and has for its object the release and utilization of the vapour corresponding to the difference in pressure between the two calandrias.

(*d*) The condensed water from each cell flows to the fall pipe of the condenser or to the wet air pump.

The method most to be advised is the separation of the first cell water, all of which is used as boiler feed. The second cell water is also taken away separately, and used as make-up water for boiler feed. The third and fourth cell waters may be taken away jointly and form a supply for maceration, filter cake washing, molasses dilution, and general service.

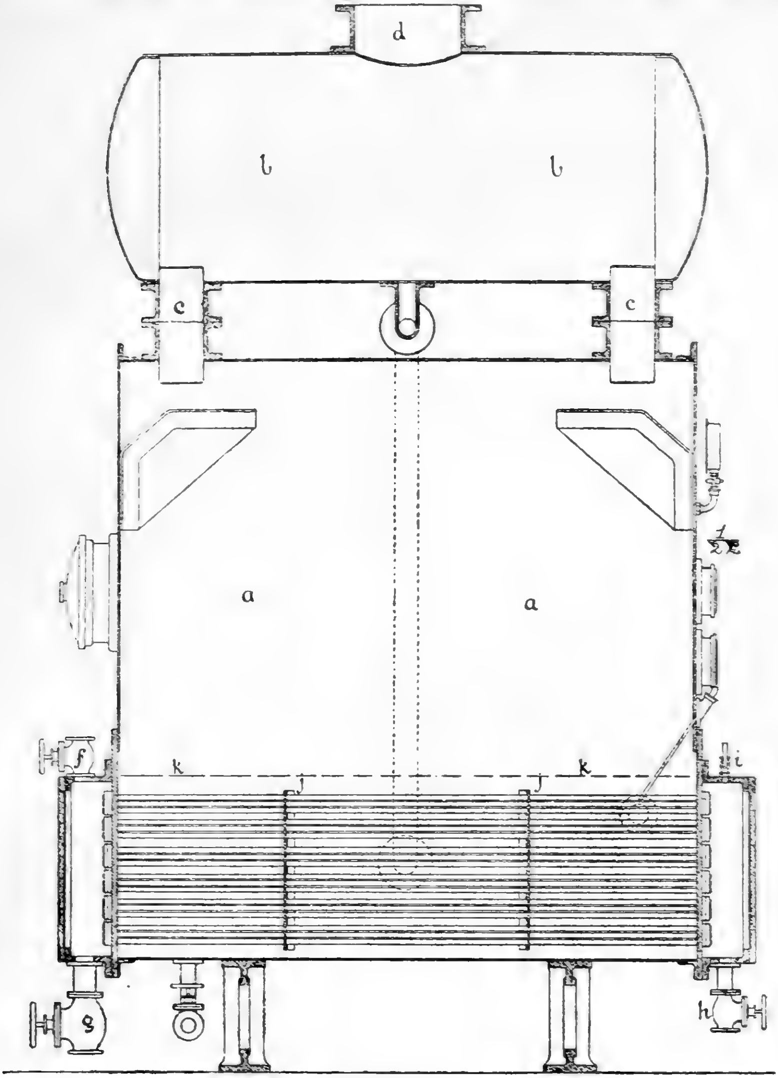

FIG. 197

This system does not utilize the economy to be obtained from circulation of the condensed water, but is advantageous in other ways.

Position of Cells.—Usually the units are placed on the same level and generally in series. Where space is restricted the piled type may be used, in which the cells are superimposed one on another. This design appears in Pecqueur's French patent (6686, 1834), and in a number of recent designs.

Horizontal Submerged Tube Apparatus.—The original Rillieux multiple effect was of this type, and for its historical interest one cell is shown in *Fig.* 195; some very early apparatus of this type still (1919) remain in operation in Cuba. The modern form is contained in the Welner-Jelinek design used very extensively in Germany, Austria and Russia, and in the derived forms of the Swenson and Newall in the beet sugar industry of the United States. The Welner-Jelinek apparatus is illustrated in end elevation and in longitudinal section in *Figs.* 196 and 197. The tubes forming the heating surface may be as much as twelve feet long and from three quarters to an inch and a quarter in diameter; they are supported in tube plates at either end, and in intermediate plates shown at *j*, and are arranged in nests of nine or twelve. The steam enters the steam chest through the valves *f* and *g*, one being used for live and one for low pressure steam. The tubes are set at a slight incline to assist the flow of the condensed water to the collecting box at the opposite end to the steam entry whence it is removed through the valve *h*. The incondensible gases are vented through the opening *i*. Internal baffles cause the juice which enters at *m* to make several changes of direction before it reaches the exit shown to the right of the steam valve *g*. An entrainment vessel communicating with the vapour space by the conduits *c* forms part of the usual design. The advantage originally insisted on in this type was the obtaining of a low level of the material being evaporated, and, in order to maintain this advantage without increasing the size of the shell, apparatus are built with two heating elements in one chamber, as indicated in *Fig.* 198.

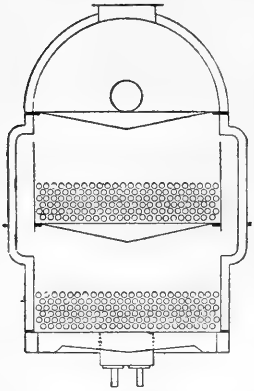

FIG. 198

In contradistinction to the vertical submerged tube type, the heating surface of this apparatus cannot be cleaned mechanically in situ.

Yaryan Evaporator.—This evaporator is included in patents 14162, 1886; and 213, 1888: U.S. patents 300185, 1884; 355289, 355290, 1886; and 383384, 1888.

In this evaporator the juice occupies the interior of tubes arranged horizontally, through which it is pumped at a high velocity. As shown in *Fig.* 199, steam enters the shell at *e*, and juice entering at *d* passes through the tubes, leaving at *g*. The juice does not fill the tubes, but forms a film on the inner periphery. On arrival at the end of a run, juice and vapour pass through *j* to the separator *h*, seen in section in *Fig.* 200. The vapour passes up and down the baffle plates *b*, and thence by the pipe *k* to the next effect or to the condenser. The liquor passes through the pipe *i* to the tubes of the next effect.

This apparatus may be built with the vessels in either the same vertical or horizontal plane; it is now only exceptionally found in the cane sugar industry.

Lillie Evaporator.—This evaporator is contained in patents 3006, 12391, of 1888; 11686, 1890; 7187, 1891; 11104, 1893; U.S. patents 341669, 344586, 1886; 378843, 1888; 422234, 422235, 440231, 1890; 466862, 1892; 491659, 1893; 521215, 1894; and a number of other patents dealing with details.

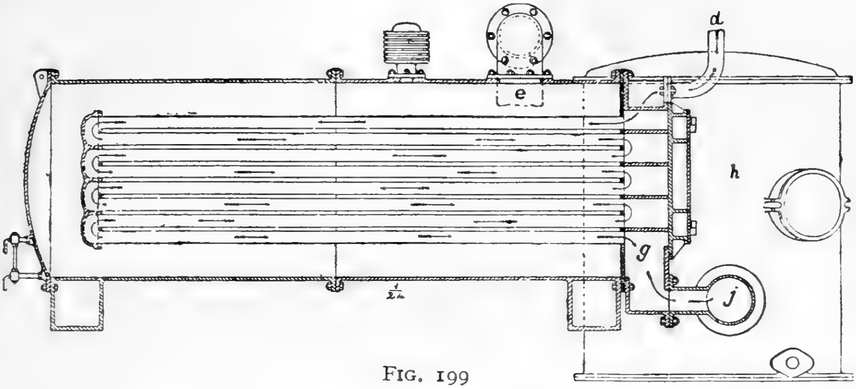

FIG. 199

As originally proposed, the Lillie model was a vertical tube apparatus, with juice distributed as a film on the interior of the tubes. In the form in which it has become widely used in the cane sugar industry, horizontal tubes are employed, on the exterior of which is distributed a film of material.

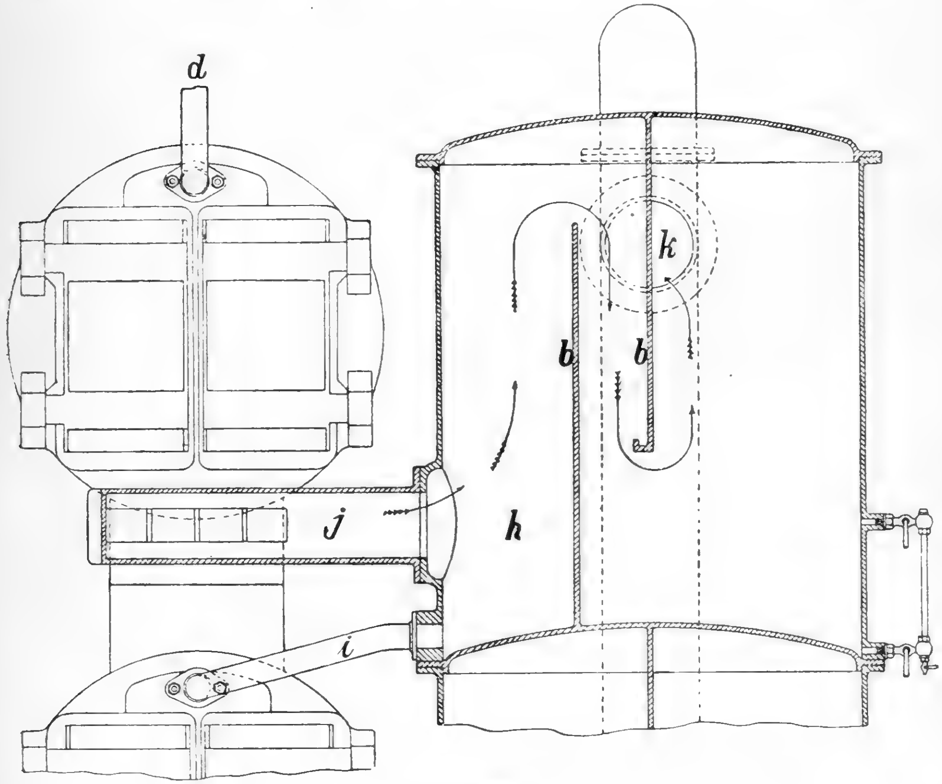

FIG. 200

One cell of a form of the apparatus is seen in section in *Figs.* 201 and 202. The heating tubes *e* vary in length from 5 feet upwards and are usually 3 inches in diameter; they are expanded at one end into a thick tube plate, and are set at a slight incline, each tube having its own vent into the vapour space. The juice is circulated by means of centrifugal pumps *c*, and enters each cell by the distributing pipe, whence it flows as a rain over the surface of the tubes. Steam enters at *g* and leaves at *h*. The condensed water is trapped at *i* and is circulated from cell to cell.

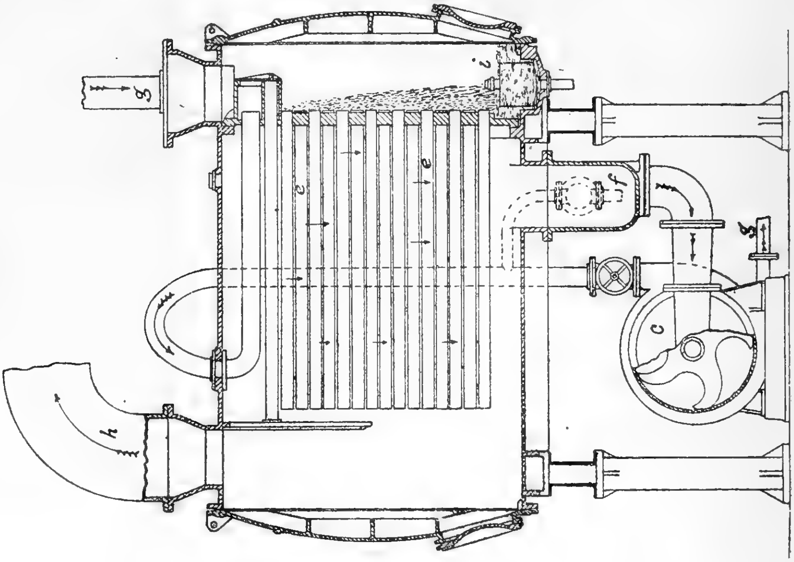

FIG. 202

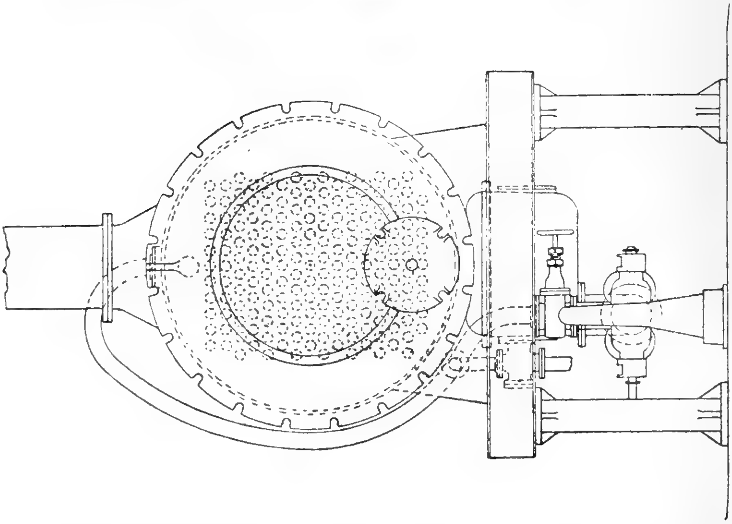

FIG. 201

The late forms of the Lillie apparatus are made reversible as regards direction of both liquor and steam.

Kestner Apparatus.—This is covered by British patent 12502, 1906;

U.S. patent 1016160, 1912. The apparatus depends on the principle of the climbing film, and is illustrated in *Fig.* 203. It is a vertical tube externally heated apparatus, and consists of a vertical tubular cluster with tubes about 24 feet long. The juice enters the apparatus at the bottom through the pipe *a*, the heating steam entering at *b*. Under the influence of ebullition the juice climbs up the interior of the tubes and passes on to the next effect in series by way of *e*. The condensed water is removed at *f*, and the steam generated after passing through a centrifugal separator leaves at *d*.

Stillman Evaporator. — This apparatus, contained in U.S. patent 484831, 1892, is shown in *Fig.* 204. The method of juice circulation is the same as that in Chapman's patents (1752 and 2511 of 1888), the central circulating tube, *a*, being used to establish circulation from cell to cell. Regulation of flow is obtained by a float and weighted lever combination, *b*, and in order to obtain a film effect the tops of the tubes project over the upper tube plate.

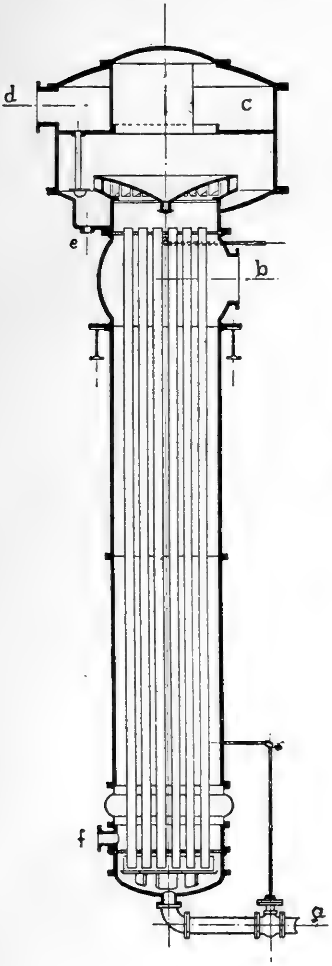

FIG. 203

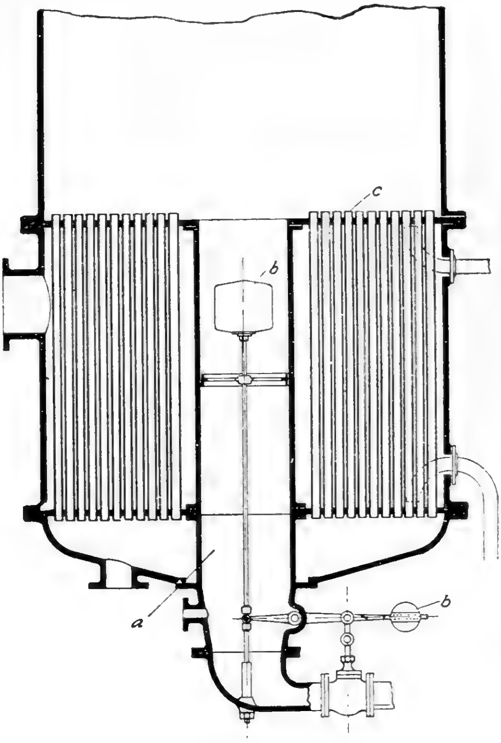

FIG. 204

Witcowitz Evaporator.—This type of evaporator, which has become established in central Europe, is illustrated in *Fig.* 205. The peculiar form of heating surface also finds application in the rapid heating of juices and syrups contained in tanks.

Sandborn Evaporator.—In this apparatus (U.S. patents 1028792, 1912; 1143074, 1915) the heating surface, *Fig.* 206, consists of vertical tubes, *a*, closed at the upper end and opening at the lower end into a steam chest, *b*. The removal of the incondensible gases is effected by means of inner tubes, *c*, passing into the chamber *d*. This apparatus is referred to as the double tube type, and first appears in Beanes' patent (2898 of 1853).

Deerr Evaporator.—Patent 16544 of 1917; U.S. patent 1287650, 1918. This apparatus, *Figs.* 207, 208, 209, adopts a rectangular body, and in other respects is a vertical submerged tube design. The usual central circulating tube is developed into a down-take, *a*, extending the whole length of a vessel, and on either side are arranged the twin calandrias, *c*, provided with individual steam entries, *b*. The incoming juice enters by the perforated pipes *h*, one to each calandria, and is taken away by the perforated pipe *i*, located immediately below the down-take. The incondensible gases are removed by the system of perforated pipes, *d*, opposite to the steam entry, and arranged in a vertical plane. The condensed water is collected by a system of pipes, *f*, formed in the lower tube plate, and passing into the header, *g*. In order to obtain a fall and rapid removal of water, the apparatus is erected slightly out of the vertical.

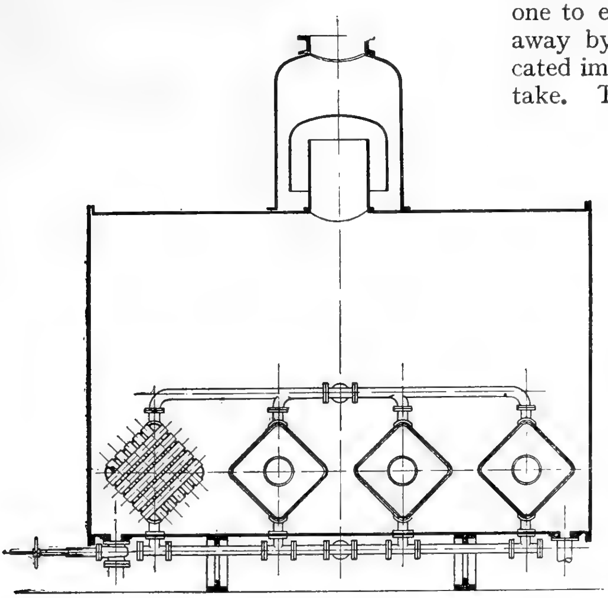

Fig. 205

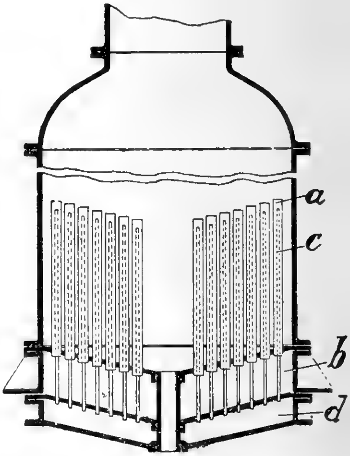

Fig. 206

Regeneration of Low Pressure Steam.—Pelletan (1840), Riltinger (1857), Felix (1871), Robertson (patent 790 of 1872), and Wiebel and Piccard (patents 5143 of 1878 and 1761 of 1883) were pioneers in attempting to introduce schemes whereby low pressure steam as from the first cell of a multiple effect is compressed to the pressure of the steam entering the calandria of that effect.

The four first named experimented with the use of injectors. The Webel-Picard combination depends on the mechanical compression of the steam, and where power is to be had naturally the scheme is practicable. It is, or was, in successful use in a salt factory at Bevieux in Switzerland.

The scheme has been described by Whitehead,[16] and its mathematics fully discussed by Svorcik.[17]

Recently it has been put into operation by Prache and Bouillon (British patent 26065, 1905). They employ an injector called a thermo-compressor. As applied to a triple effect this system is shown diagrammatically in *Fig.* 210. Live steam enters at *a* and aspirates and compresses a portion of the steam evaporated from the boiling liquid. This regenerated steam then re-enters the calandria along with the supply of low pressure steam at *b*.

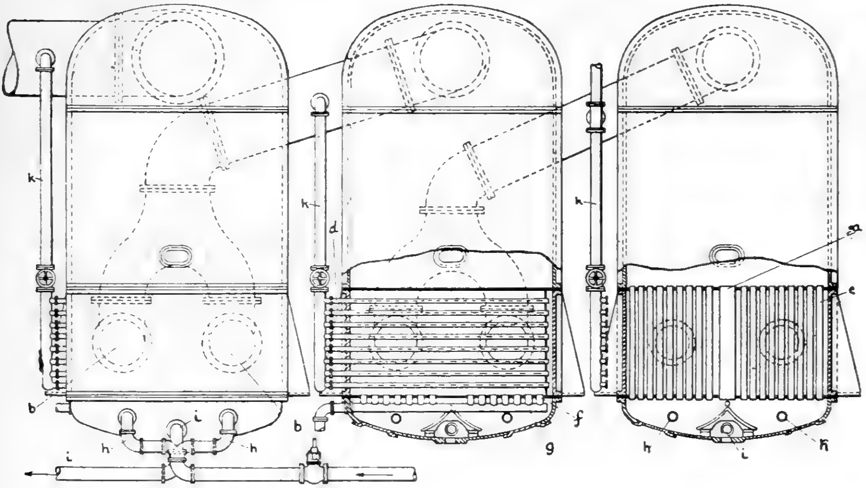

FIG. 207

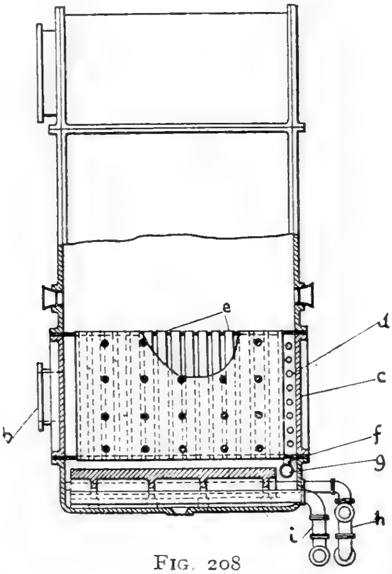

FIG. 208

This system has been installed at the beet sugar factory at St. Leu d'Esserent in France, and has been described and studied experimentally by Erclancher.[18] He states that the first vessel of the multiple uses steam at 223·7° F., or 3·9 lbs. gauge, and that it boils at atmospheric pressure. The live steam used in the thermo-compressor is at 120 lbs. gauge, and 1 lb. aspirates and compresses rather less than two lbs. of steam from the vapour space of the first effect. The single effect then will operate as a triple, and in a triple each pound of live steam will operate at sextuple and each pound of exhaust steam at quadruple effect.

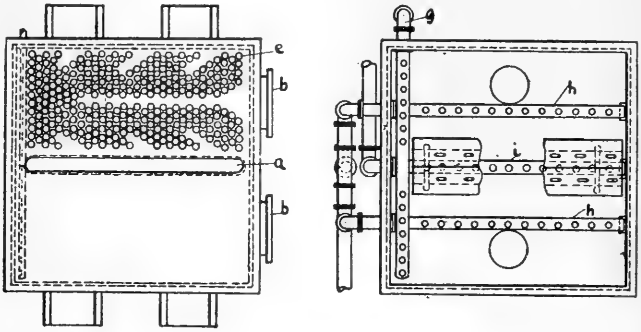

Fig. 209

From experimental data, Erclancher has constructed the following table here presented in Fahrenheit units :—

Weight of Steam at Atmospheric Pressure aspirated and compressed to the Stated Pressure by one lb. of Live Steam at the Stated Pressure.

	Pressure and temperature F° to which atmospheric steam is raised.								
Pressure of live steam lbs. per sq. in.	219·6 2·0	222·8 3·4	220·4 4·7	230·0 6·0	233·6 7·4	237·2 9·0	240·8 10·6	244·4 12·2	248·0 14·1
45	1·70	1·10	0·80	0·60	0·45	0·35	0·30	0·20	0·10
60	2·09	1·35	1·00	0·73	0·57	0·48	0·40	0·32	0·26
75	2·35	1·52	1·10	0·84	0·66	0·55	0·45	0·38	0·33
90	2·58	1·65	1·20	0·92	0·74	0·61	0·51	0·44	0·38
105	2·76	1·80	1·32	1·00	0·80	0·67	0·56	0·50	0·42
120	2·93	1·91	1·40	1·08	0·86	0·71	0·60	0·53	0·45
135	3·10	2·00	1·46	1·14	0·91	0·77	0·65	0·55	0·49
150	3·35	2·10	1·54	1·21	0·96	0·79	0·70	0·59	0·51
165	3·41	2·19	1·62	1·25	1·00	0·83	0·72	0·61	0·54
180	3·45	2·29	1·67	1·30	1·04	0·86	0·75	0·65	0·57
195	3·55	2·34	1·71	1·32	1·07	0·90	0·77	0·68	0·58
210	3·70	2·41	1·80	1·38	1·10	0·92	0·79	0·70	0·60
225	3·85	2·65	1·85	1·41	1·13	0·94	0·80	0·71	0·62

This system, though technically feasible, has not yet reached any great extension. One objection to its use is that the temperature differences available are necessarily restricted, and thereby very large heating surfaces are implied.

Use of Superheated Steam.—Claassen, experimenting with coil vacuum pans, condemned the use of superheated steam, and has advised that such steam before entering the coils or calandria be reduced to a saturated one by the introduction of " atomized " water, but later experiments with evaporators by Saillard[19], Jaks[20], and Kerr[10] have shown that with a moderate degree of superheat the coefficient of transmission is the same as with saturated steam. In Kerr's experiments the superheat varied from 3·9 to 31·7° F., and a uniform coefficient of transmission was found.

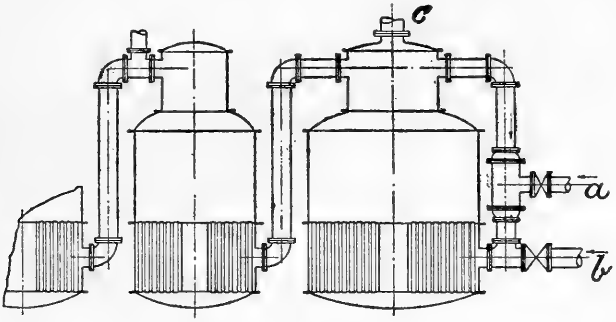

Fig. 210

Condensers.—The final reduction of pressure, or production of the " vacuum " in the last cell of a multiple effect, is obtained by withdrawing the air by a pump, and is maintained by the rapid condensation of the steam with the removal of whatever air accompanies it. The apparatus in which this condensation takes place are called condensers, and fall into two main classes—surface and injection. In the former the steam and cooling water are separated by a partition, through which the heat is transmitted. The cells of the effects, juice heaters, etc., are all types of surface condensers, which are very rarely used to obtain the final reduction in pressure.

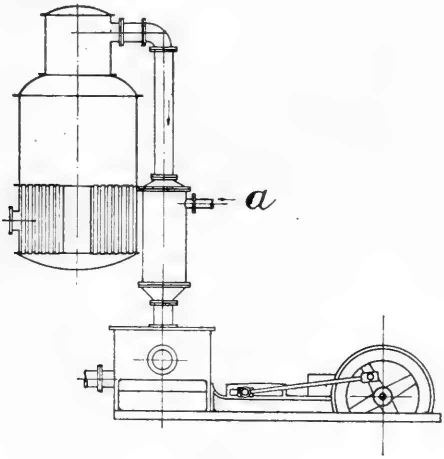

Fig. 211

Two specialized forms of surface condensers which have found a very limited use in the cane sugar industry may be mentioned. The first consists of a horizontal tubular bundle, through which the steam circulates, and over the tubes of which water is allowed to trickle ; the whole combination being exposed to the atmosphere, the cooling effect of which may be increased by fans. This form of condenser is included in Clark's patent (4665, 1822). In the Thiesen condenser a similar idea obtains, but the tubular bundle is immersed in an open tank, from which revolving wheels continuously remove water, letting it fall back in a shower exposed to currents of air propelled by fans. It is easy to see that either of these systems reduces itself to a self-contained combination of surface condenser and of cooling tower. This form of condenser, with juice as the cooling means, was a part of Derosne's patent, and was once largely used in Cuba.

The condensers almost universally used in sugar-house work are injection condensers, wherein direct contact of the steam and water obtain. The water, condensed steam, and air may be removed together by what is correctly called a "wet-air" pump. This adjective is also irrationally transferred as a distinctive title to the condenser attached thereto. Otherwise the air and water may be separated in the condenser and removed separately. The pump in this case is called a "dry-air" pump, and the condenser with a singular lack of reason is also called "dry." In this case the condenser is always placed at such an elevation that the water pumped into it can flow away against the atmospheric pressure, and hence this type is frequently called a Torricellian or barometric condenser. The essential differences between the two types will be understood from the diagrams in *Figs.* 211 and 212. The wet system or low level condenser is shown in *Fig.* 211. The water enters the condenser at *a* under the influence of atmospheric pressure, and is removed by the pump along with the air and condensed steam. In this system one pump evacuates the vessel, lifts the water and finally removes air, water and condensed steam. In *Fig.* 212 is shown a dry or high level condenser placed at least 33 feet from the ground level. Water is pumped into the condenser at *a* ; air and steam from the pan pass through the shower of falling water, the latter being condensed and the former being

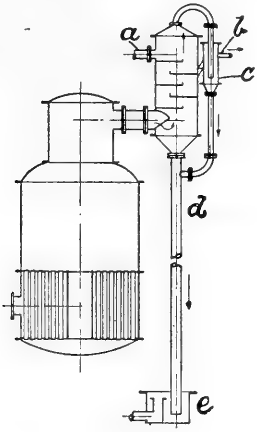

FIG. 212

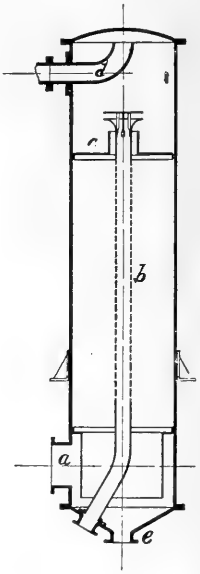

FIG. 213

drawn off by a dry-air pump through the pipe *b*; at *c* is shown a separator to prevent water passing into the air pump. The condensed steam and injection water flow down the fall pipe *d*, terminating in the sealing tank *e*, whence they flow away by gravity. This type of condenser is first mentioned in British patents 5635, 1828, and 5785, 1829, taken out by John Davis for an unnamed inventor.

The most important distinction in condensers is the sense in which the water and steam pass in relation to each other. When they travel in the same direction the term "parallel current" is employed, "counter-current" being used when the flows are opposed. In both cases, however, the flows are parallel, and the terms "co-current" and "counter-current" will be used in preference.

In order to break up the water in its passage through the condenser, and thus to expose a large surface for the better condensation of the steam, many devices and arrangements are employed.

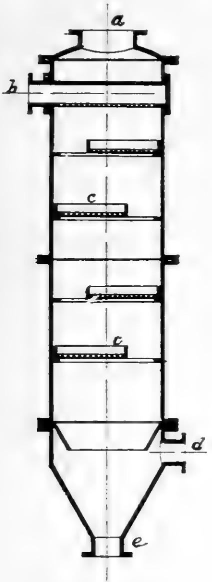

FIG. 214

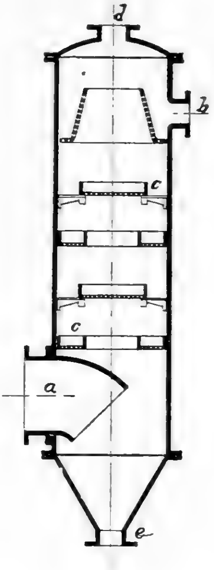

FIG. 215

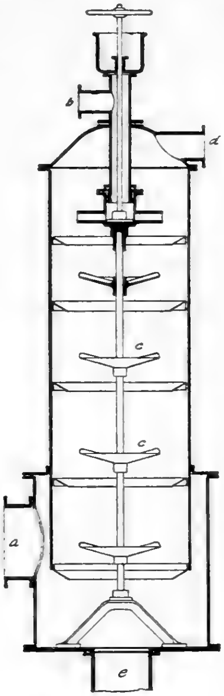

FIG. 216

As indicated in *Fig.* 213, steam enters at *a*, water being introduced by the pipe *b*, and discharged as a rain through the perforated plate *c*; the air passes away to the air pump by the pipe *d*, the connection to the fall pipe whence the water passes away being at *e*. Alternatively in this arrangement the pipe *b* may be perforated throughout its length, the water thus leaving the pipe horizontally and at right angles to the flow of the steam, thus forming a cross-current system. *Fig.* 214 shows a co-current type of condenser, and *Fig.* 215 a counter-current type, lettered as in *Fig.* 213.

A more complex type in occasional use on the continent of Europe is indicated in *Fig.* 216, the water being projected from the plates *c*, which are caused to rotate at a high speed; the lettering is otherwise as above.

Convention has developed the injection condenser as a vertical cylinder.

In some recent steam turbine plants a horizontal form has been adopted, and one such is indicated in *Fig.* 217; to such the term cross-current is apposite.

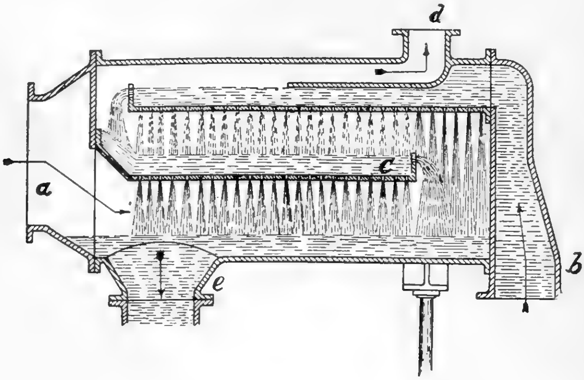

Fig. 217.

In cases where a head of water is available the pump may be dispensed with, and water and air removed together through a *vena contracta* or ejector, as shown in *Fig.* 218, or in the more highly developed form of multiple jet ejector, as indicated in *Fig.* 219.

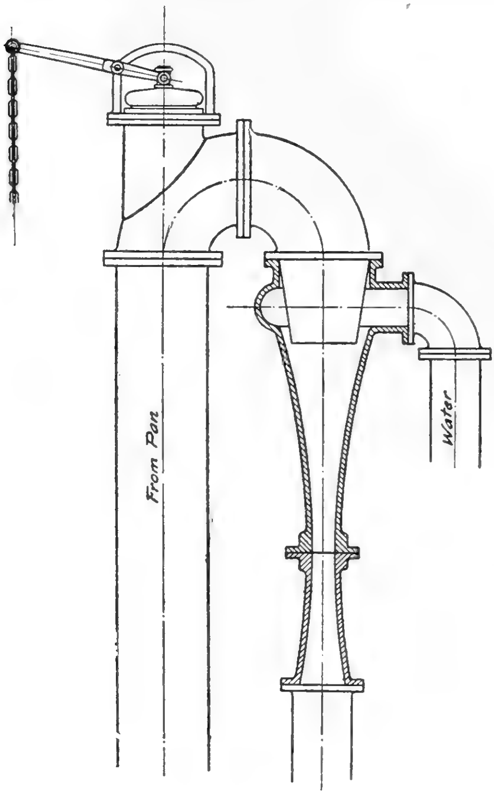

Fig. 218

The relative merits of the systems may be briefly mentioned.

In the "wet" system the air and the water have to be removed together, whereby a slow movement is enjoined on the pump, which soon reaches very large dimensions and becomes of exaggerated size except for smaller plants. In the "dry" system, the air being removed separately, a much higher pump speed can be employed, and incidentally a much higher volumetric efficiency is obtained.

In the counter-current system the air is last in contact with the water as it enters the condenser; and hence, in the extreme case, may leave at the temperature of the water, that is to say, at the minimum temperature. In a co-current (parallel) condenser the lowest temperature at which the air can leave is that due to the mixture of the steam and the water; hence the volume occupied by the air is less in the counter-current type, and there is a less necessary displacement in the pump. It follows, too, that, with the counter-current system, the bad effects of water at an elevated temperature, or a limited supply of water, can be more satisfactorily combated by large pump capacity than with the co-current system.

Quantity of Water required.—If t_1 be the initial temperature of the cooling water, t_2 the final temperature, h be the total heat of the steam to be condensed, then $w = \frac{h - (t_2 + 32)}{t_2 - t_1}$, where w is the water required per lb. of steam. For conditions in the tropics it would be well to calculate for water 40 times the weight of steam to be condensed, although, with efficient condensers and air pumps of ample capacity, good results can be obtained with less.

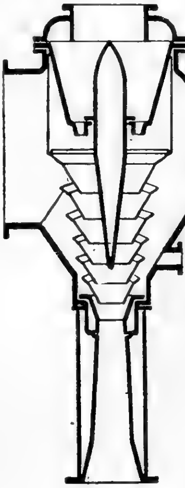

Fig. 219

Inlet and Discharge Pipes to Condensers.—The water is in general practice introduced to the condenser by atmospheric pressure from a supply tank, to which the water is pumped, or to which in certain cases it may gravitate, and in the case of low level condensers the tank may be on the ground floor. If h_1 be the excess of the pressure of the atmosphere over the pressure in the condenser, expressed in feet of water, and if h_2 is the height of the condenser inlet above the level of the supply tank, the water enters under a head of $h_1—h_2$ feet. Let this head be h. With no loss of head the velocity of the water entering the condenser will be given by the equation $v^2=2\,gh$, in feet per second, where v is the velocity and g is the acceleration due to gravity or 32 ft. per sec. The sources of loss of head are: resistance of entry to the pipe from the tank, resistance due to bends and to obstructions, such as valves, and to friction in the pipe. Neglecting friction, these sources of loss may be connected by the following equation: $h^1 = \frac{h}{1 + a_1 + a_2 + a_3 + \ldots}$. Considerable uncertainty attaches to the value of these coefficients. For water flowing into a pipe from a tank through a cylindrical orifice, a coefficient of value 0·505 is accepted, so that for this influence $h^1 = \frac{h}{1+0{\cdot}505}$. With a bell-mouthed orifice the value of the coefficient may fall to 0·08. The value of the coefficients for bends varies with the radius of the bends, and with right-angle bends of not less than four pipe diameters ranges round about 0·15. The value of the coefficient due to the loss of head caused by the obstruction offered by a valve evidently is entirely dependent on the design of the latter; it may be guessed as 0·5. A preliminary approximate idea of the velocity of the water entering the condenser can be obtained on these lines: after obtaining the value of h, irrespective of friction, the latter can be allowed for by the equation: $h_2 = \frac{h_1}{1 + f\frac{l}{d}}$, where f is $0{\cdot}02 + \frac{0{\cdot}02}{d}$,

l and d being the length and diameter of the pipe in inches, h being the value disregarding friction, and h_2 the finally accepted value.

For obtaining the diameter of the fall pipe, a head of 1, 2, 3, etc., feet above that due to the excess of atmospheric pressure over that in the condenser is assumed; and a computation on the lines above is made.

Dimensions of Condensers.—The height of a condenser is governed by the time that it is necessary for the water to remain in contact with the steam, and this in turn is controlled by the time taken for the water to fall down the condenser. Experience has shown that condensers with an unbroken fall for the water require a height reaching to as much as 15 ft. for efficiency. By the use of plates forming cascades, the time taken for the water to fall is increased, diminishing the necessary height of the condenser. The cascades, have, however, another function. Water is a very bad conductor of heat, and consequently, when the outer layer of a film of water has been heated, the rate of condensation of steam also decreases. At each cascade, however, a fresh surface is offered to the steam, and a more rapid condensation begins again. It is also evident that the height of the condenser is not connected with the quantity of steam to be condensed. The accumulated experience of engineers seems to have led to an over-all height of twelve feet, with four cascades, as affording an efficient condenser. The area of cross-section is evidently proportional to the quantity of steam to be condensed, and practice seems to incline to an area of 1·5 sq. ft. per ton of steam to be condensed per hour for conditions as occur in the tropics.

Central Condensation.—In place of allowing each unit its own condenser, one central condenser may be installed for the whole house; the advantage claimed is the reduction in the number of cylinders and reduced first cost. The writer is inclined to believe that these advantages are of small moment, for, whatever the number of condensers, they may all draw from the same tank, and their united discharge may be removed by one pump. The reduction in units only takes place then in the air pumps, but these again can easily be grouped to be operated by one steam cylinder. An objection in large houses is the excessive weight of only one condenser, the placing of the load of which is a much more difficult problem than the distributed load of a number of small condensers. The lay-out of a number of individual vapour pipes to one condenser is also unsatisfactory.

The use of one pump also causes irregularities when throwing in or cutting out a pan, and sugar boilers much prefer to have each unit independent of the others, as thereby the control of the boiling is unaffected. Regulation of the individual vacua in pans all connected to a central condenser can, however, be obtained by installing valves in the pipe lines to the condensers, whereby the area of the passage may be restricted at will.

Vacuum Pumps.—The pumps used in sugar factories for the maintenance of the vacuum may be classed first of all as wet or dry, the former class including such which remove the water and air conjointly, the latter treating the air only after its separation from the water used for condensation. Most designs of wet-air pumps are also capable of functioning at a moderate efficiency as dry-air pumps, and indeed do so when evacuating a vessel in commencing operations. On the other hand many designs of pumps classed as dry demand the use of a certain amount of water for the purpose of sealing the valves.

The second classification of pumps divides them into reciprocating and rotary types; the former may be direct acting or driven through a crank and fly wheel.* Various forms of pumps are described below.

Reciprocating Torpedo Wet Pump.—*Fig.* 220 shows a form of wet-air pump, of which in past times very many have been installed. The reciprocating element *e* may be a piston or torpedo as shown, and the valves may be hinged clack valves, as at *a*, or preferably rubber discs on a gridiron seating, as at *b*. The air and water from the condenser enter through *c*, the latter being finally conducted to the ditch by way of *d*. This type of pump is only suited for smaller installations, since owing to the slow movement necessary it becomes of impossible dimensions for the large evaporating units now generally installed.

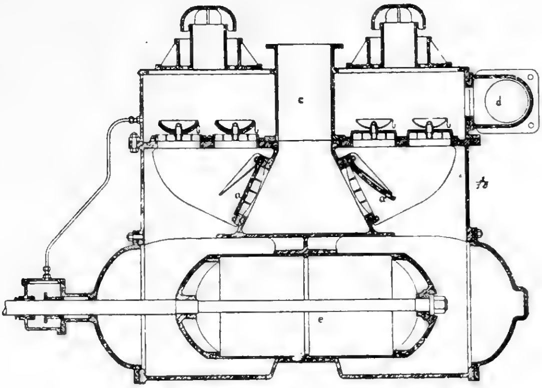

FIG. 220

Edwards Pump.—The Edwards pump (patents 18817, 1897; 629, 630, 1899) is a type which dispenses with the suction valves; it is shown in section as a wet-air pump in *Fig.* 221. Water from the condenser flows by way of *d* to the reservoir *c*; the conical bucket on the down stroke forces the water into the barrel of the pump. As soon as the bucket rises, the entry of water by way of *d* is closed until the bucket or piston has passed, and the water which has been projected into the barrel is lifted and discharged through the valves at *a*, passing away at *e*; at *g* is a relief valve. The incondensible gases are free to escape to the space above the water. This pump can be used also as an efficient dry-air pump. As it is single acting this type is usually installed as double or treble-barrelled units, when action becomes almost continuous.

Slide Valve Reciprocating Pumps.—The standard type of dry-air pump is a slide valve pump operating mechanically as a slide valve steam engine reversed. In pumps of this nature air under compression is left in the cylinder at the end of each stroke, so that the efficiency of the pump is reduced.

---

* American practice quite irrationally describes a crank and fly wheel reciprocating pump as a rotative pump, thus translating the mechanical means used to obtain reciprocating motion to the pump itself. The term rotary is here used in its proper significance.

If at this moment communication between the two faces of the piston be made air will pass over from one side to the other. This scheme is known as the equalization of pressure, and the valve establishing communication as a "flash port." It was first suggested by Welner, and is contained in Burchart and Weiss's patent (3551 of 1882.) The expressions giving the efficiency of pumps with and without equalization of pressure are: (1) Without:—Efficiency $= \dfrac{1 - \dfrac{a}{p}}{1 - a}$; (2) With:—Efficiency $= \dfrac{1 - \dfrac{a^2}{p}}{1 - a^2}$, where a is the volume

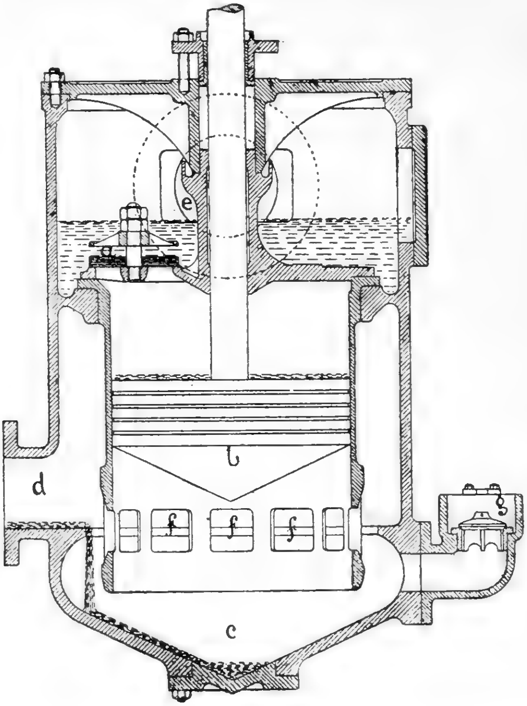

FIG. 221

of the dead space per unit volume of cylinder, and p is the pressure reached in the vessel being evacuated referred to atmospheric pressure as unity.

A type of this pump, as made by Wegelin & Hübner, is shown in *Fig.* 222. There are three valves, *a*, *b*, *c*, known as the distributing, equalizing and delivery valves. The valve *a* allows air to enter or depart and serves to connect the suction or discharge to the pan or atmosphere; the delivery valve *c* on the valve *a* is for the escape of air and to prevent air returning to the pump; the equalizing valve *b* is for the purpose of connecting the channels *d* when the piston is at the end of the stroke. At this moment the valve *a* is nearly central, and the discharge and suction ports are closed. The equalizing valve *b* now makes connection between the two faces of the piston by means of the channel *d*, and equalizes the pressure on either side of the piston. The valve *b* now closes and *a* opens, and as the piston moves from right to left air is drawn into the vacuum formed. The equalizing valve *b* remains closed, and the suction and delivery ports open. At the end of the stroke the valve *a* is again nearly central, and the same process is repeated.

A second means of obtaining equalization of pressure by the use of a rotary valve is indicated in *Fig.* 223. This type is constructed by the Alberger Condenser Co. There are numerous other devices putting this principle into operation.

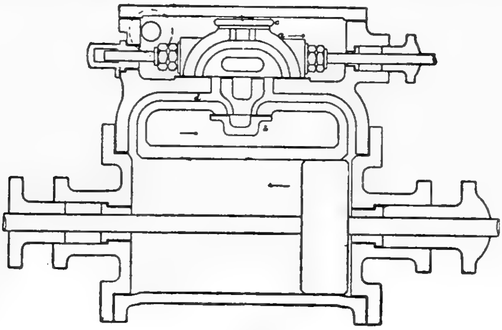

FIG. 222

Lift Valve Reciprocating Dry Air Pumps.—In place of adopting equalization of pressure some recent designs obtain high efficiency by superior workmanship and small clearances in the cylinder. The Blancke air pump,

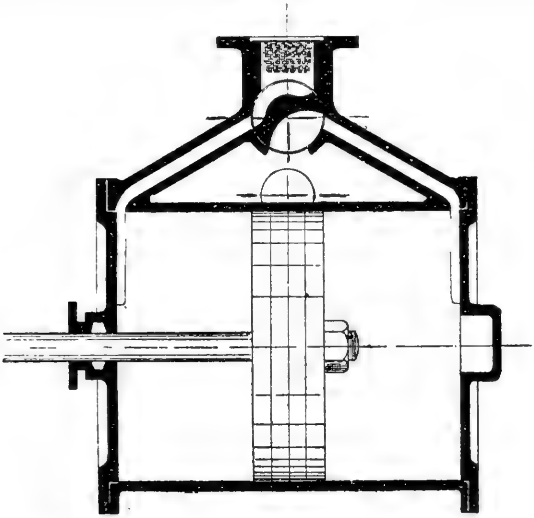

FIG. 223

Fig. 224, is of this type. Consider the motion of the piston as from left to right, so that gases are being aspirated in on the left-hand side and discharged on the right-hand side. The suction valve is composed of a series of sleeves, with rectangular openings, *A* and *B*, and a ring and flap valve *C* telescoping together and forming the annular spaces *C* and *D*. *E* is a spring, helping to close the valve under a slight difference of pressure. On the compression side of the pump all of the sleeves of the valve are forced together, and the annular spaces C' and D' and the openings A' and B' are all closed; the compressed air escapes by e' f' and g'; on the aspirating side these openings are closed by the spring *H*. The discharge valves are arranged on the lower side of the pump so as to facilitate the removal of water.

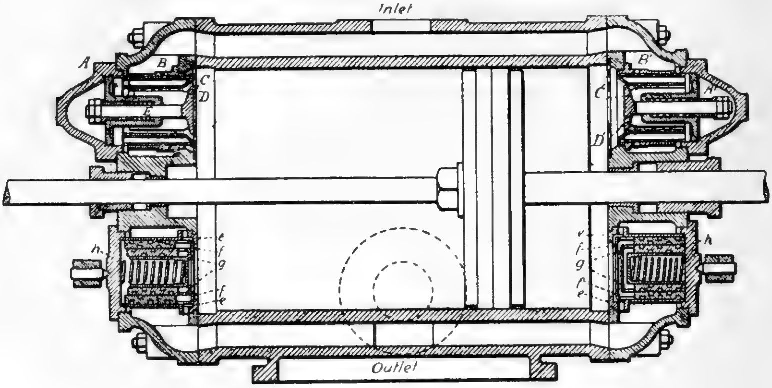

FIG. 224

A second type of high efficiency operating without pressure equalization is that of Mullan (U.S. patent), *Fig.* 225. In this design the suction ports, *a*, are located round the middle of the cylinder and are closed and opened by the movement of the piston, recalling the similar action in the Edwards pump. The discharge valves are placed at *b* in the ends of the cylinder, the air finally escaping at *c*.

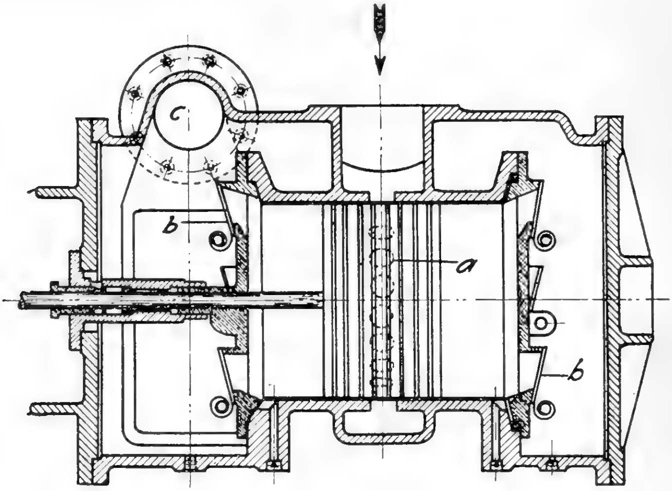

FIG. 225

Rotating Valve Reciprocating Pump.—Another type of pump, *Fig.* 226, employs mechanically operated rotating valves, the arrangement and action of which recall the movement in a Corliss engine.

Rotary Vacuum Pumps.—This type is of comparatively recent introduction, although Gwynne (patent 13577, 1851) claims a low level centrifugal pump for the removal of the air and condensed water jointly. The prototype of the rotary pump as now used is that of Le Blanc, *Fig.* 227, which is often termed a "hurling water" pump. The air to be evacuated enters at *a*, together with a certain quantity of water supplied through *b*. The removal of the air is effected by the action of the vanes *c*, which cut off slices of water and throw them along with the air into the collector cone *d*, whence they are discharged finally by way of *e*. A supplementary connection is shown at the right of the figure, and through here a second vessel may be evacuated up to 20 inches vacuum, since the action of the water in the ejector continues in its downward passage. This type of pump may be applied to a high-level condenser, *Fig.* 212, or to a low level installation, *Fig.* 211. In the latter case the main body of water is removed by a second centrifugal pump arranged on the same shaft as the air pump.

The Volume of the Air to be removed by the Pump.—It is impossible to calculate with any degree of confidence the quantity of air to be removed from the condenser. Air is introduced dissolved in the water, and is released under the reduced pressure; and, although it is known how much air water can dissolve, it is not certain that the water used is saturated. Again, air is introduced with the material to be evaporated, and some incondensible gas is given off in the process of concentration. Finally, there is the quite uncertain quantity of air introduced through leaks: certain principles of interest can, however, be developed.

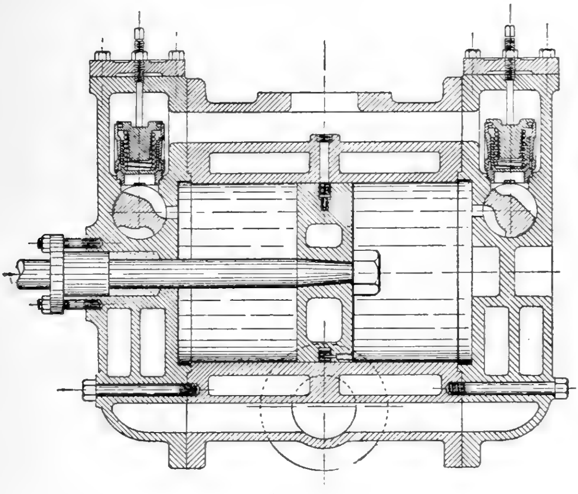

FIG. 226

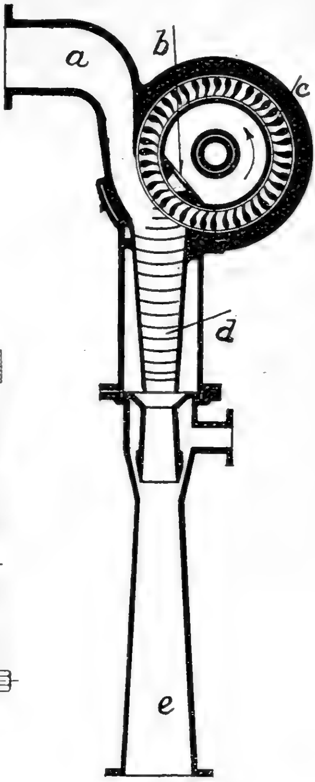

FIG. 227

The pressure in a condenser is made up of two parts: *a*, the pressure due to the water vapour dependent on the temperature of the water; *b*, that due to the incondensible gases referred to as "air." Thus, with a vacuum of 24 ins. the pressure is 2·92 lbs. per sq. in. Let the temperature of the water in the condenser be 100° F.; the pressure of water vapour at this temperature is 0·95 lbs. per sq. in.; hence the air is at a pressure of 1·97 lbs. per sq. in. As the temperature of the water increases, so does its vapour pressure, and consequently, under the stated conditions, the air will be at a lower pressure. Since the volume of air is inversely proportional to the pressure, the volume of the air becomes less as the temperature in the condenser falls.

The annexed table illustrates the variation in the air pressure in a condenser where the vacuum is 24 inches, or pressure 2·92 lbs. per sq. in., and where the temperatures are as indicated.

Temperature, F°	Pressure of gases, lbs. per sq. in.	Temperature, F°	Pressure of gases, lbs. per sq. in.
80	2·41	120	1·25
90	2·22	130	0·70
100	1·97	140	0·04
110	1·65		

Accordingly, at a temperature of 140° F. the air occupies sixty times as great a specific volume as at a temperature of 80° F.

For the moment only the air introduced by the water will be considered. Following on the determinations of Roscoe and Lunt,[21] and of Winkler,[22] the gases dissolved from air by water are:—

Temperature, F°	Lbs. gases dissolved per 1,000 lbs. of water.
60	0·0266
70	0·0241
80	0·0217
90	0·0195

For a 24-inch vacuum with cooling water at 60° F. the weights of water required to obtain different temperatures in the condenser, and hence in the discharge water, are as shown below, the weight of the air being also stated.

Temperature of discharge water, F°.	Weight of water per lb. of steam condensed.	Weight of air from water, lbs.
80	50·4	0·001365
90	33·3	0·000902
100	24·7	0·000669
110	19·6	0·000531
120	16·1	0·000436
130	13·7	0·000371
140	11·8	0·000320

The volume of 1 lb. of air in cubic feet is given by the expression $\frac{0\cdot3697\,(459\cdot4 + t)}{p}$ where t is the temperature in F° and p is the pressure in lbs. per sq. in.

In the annexed table are given, for a vacuum of 24 ins. for cooling water at 60° F., and for water discharged at the indicated temperatures, the cubic feet of water, the cubic feet of air, and the combined volume of air and water, per lb. of steam condensed.

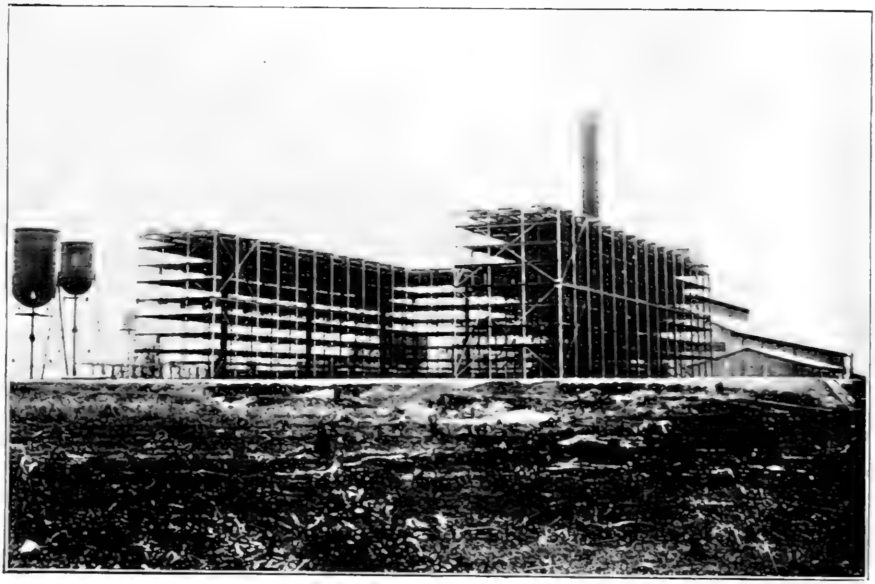

COOLING TOWER FOR WATER IN CUBA.

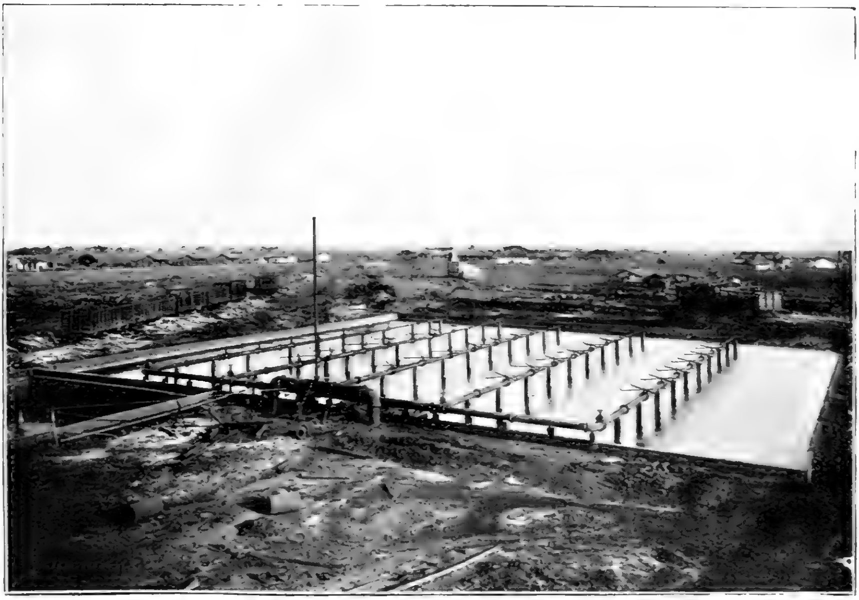

SPRAYING SYSTEM FOR COOLING WATER IN CUBA.

Temperature of the discharge water, F°.	Cubic feet of cooling water.	Cu. ft. of air.	Cu. ft. of air and water.
80	0·8192	0·1129	0·9321
90	0·5888	0·0825	0·6713
100	0·4112	0·0703	0·4815
110	0·2996	0·0683	0·3649
120	0·2736	0·0747	0·3483
130	0·2554	0·1155	0·3709
140	0·2049	1·7712	1·9761
140·5		∞	∞

On examining these figures it will be seen that the volume of the air at first decreases as the quantity of water decreases, reaches a minimum, and then rapidly increases. *Hence, if the air present in a condenser is proportional to the amount of cooling water admitted, there is a definite temperature in the waste-water at which the volume of the air and water is least.* This temperature in the waste-water is then the *optimum* for the particular condition, and the admission of more water beyond this quantity instead of affording a better vacuum has the reverse effect. Experimental data to calculate in advance this condition are wanting: it exists, however, and can probably be found by trial and error for each apparatus.

If a series of calculations be made for different vacua, to obtain the optimum temperature of discharge, *under the supposition that the gases introduced are proportional to the amount of water*, it will be found that as the water increases in temperature so does the quantity required.

The calculations lead to the following very rough approximation:—

With initial temperatures of 60, 70, 80, 90° F, the water admitted should be 10, 25, 35 and 50 times the amount of steam to be condensed.

If further calculation on the above lines be made, it will be seen that for vacua of 24, 25, 26, 27 inches the volume of the air to be removed is roughly as 6, 9, 15, 25: that is to say, to maintain a 27-inch vacuum requires a pump $\frac{25}{6}$ times as large as for a 24-inch vacuum. If, however, a quantity of air, x, enters which is independent of the water, the ratio will be $\frac{25 + x}{6 + x}$, and as x is positive the rate of pump capacity will not increase so fast.

As regards relative pump capacity in wet-air pumps and dry-air pumps, some idea may be obtained from calculations made on the above lines. Under the same conditions it will be found that the volume of air from the dry system is usually only one-third or thereabouts that from the wet system, a condition which gives some idea of the relative pump capacity as cu. ft. developed per sq. ft. of heating surface, etc. As dry-air pumps can work at much higher speeds than can wet-air pumps, the actual size of the dry-air pump decreases still more in comparison.

Empirical rules are very dangerous tools unless the basis upon which they are developed is known and appreciated. This is particularly true of vacuum pumps, into the necessary capacity of which so many factors enter. A collection of data of very many installations leads to the following very rough rules referred to dry vacuum pumps:—

CUBIC FEET DISPLACEMENT PER MINUTE.

		Per sq. ft. heating surface.	Per lb. of vapour.	Per ton-cane-hour.
Quadruple	..	0·05—0·075	1·5—2·0	15—20
Triple	..	0·07—1·00	1·5—2·0	20—25
Pans	..	0·5 —1·00	1·5—2·0	15—20

With wet pumps the displacement required is from 2·5 to 3 times as much.

Cooling of Water.—In many districts, as for example in Cuba and in Mauritius, the supply of water is not sufficient for the needs of the condensers. It is therefore necessary to continuously cool and use over again the available supply.

The means adopted for doing this is the exposure of the water to the air in such a form as to expose as great a surface as possible. Cooling takes place by radiation, by contact through contact with the air, and also by means of the heat abstracted through evaporation.

The appliances used to this end are either towers or spraying systems. Towers may be either enclosed shafts, to the top of which the hot water is delivered, and down which it flows over a series of trays designed to expose as much area as possible. A fan may force a current of air upwards through the tower, or natural draft may be used. This type of cooler is not to be found in sugar districts, and its place is taken by open towers. These consist of a framework, usually about thirty feet high, on which at vertical intervals of about four feet are laid open horizontal platforms; on these are frequently set faggots or brushwood, so as to increase the cooling area. The hot water is delivered to a gutter or system of distributing gutters on the top of the tower. The sides of these are provided with saw cuts, and their inclination is such that an even distribution of the water is obtained. The horizontal cross section of the towers assumes various forms; it may be circular or a long rectangle, ten to twenty times as long as broad; or again a very efficient form takes the shape of three sides of a hollow square, the perimeter of which will be about fifteen times the width of the tower itself. Such a cooling tower is indicated in *Plate* XXVII. Expressions of the coefficient of transmission under these conditions can be obtained, but the assumptions necessary to be made are so broad that the results are very unsatisfying. Actual experience gives the following as a satisfactory basis of design:—Platform area, 300 sq. ft. per ton-cane-hour; cubic contents of tower 1,200 cu. ft. per ton-cane-hour; capacity of cistern, 200 cu. ft. per ton-cane-hour.

The general Cuban practice in connection with cooling towers is to place the condensers at a level so high that the overflow from the barometric seal will gravitate to the distributing system on the top of the tower.

Recent practice in Cuba has tended towards the substitution of spray nozzles for the cooling tower, and such a system is illustrated in *Plate* XXVII. As usually installed each spray head is made up of five nozzles, each nozzle under a head of twenty-five feet having a capacity of 40 U.S. gallons per minute. Allowing twenty tons of cooling water per ton of cane this reduces to two nozzles per ton-cane-hour. As, however, a certain number of nozzles are out of commission being cleaned, and the capacity of those in action is reduced due to the presence of dirt in the water, three nozzles per ton-cane-hour would be a more suitable allowance. The pipes carrying the spray heads are spaced twenty-five feet apart, the spray heads being spaced thirteen feet centre to centre.

A comparison of the two systems favours the spray system, both as regards first cost and renewals, the chief disadvantage being the annoyance following on the frequent choking up of the nozzles.

In either system the loss of water is from 3 to 5 per cent., which has to be supplied from outer sources.

Entrainment.—By this term is meant the carrying forward of material into the vapour pipes and its consequent loss. Three causes are at work :—1. Material is splashing into the head boxes of the vessels. 2. Material creeps up the sides of the vessels due to capillarity. 3. Hollow drops or bubbles are formed, and when the forward velocity of the current of vapour is such that it exerts on the bubble a pressure equal to its weight the latter floats and is carried forward. This process is referred to as vesicular transference. It is in the last cell of the evaporators that these influences are mostly at work. They may be reduced to a minimum by the devices indicated below.

Splashing losses may be avoided by giving a liberal height to the vessel and by placing horizontal guard plates in the body of the vessel. These guard plates may conveniently take the form of a ring, with its opening covered by an overlapping disc. This means is claimed in Vivien and Dujardin's patent (2286 of 1884).

Losses due to vesicular transference are best avoided by shock obtained by abrupt changes in direction, by a sudden decrease in velocity obtained by enlargement of the vapour pipe, or by a combination of these means. In *Figs.* 228 and 229 are shown two methods as applied in the vapour pipes. The *Hodek ralentisseur*, a standard European model, is indicated in *Fig.* 230. It combines decrease of velocity with the passage of the vapour through screens. Not dissimilar in action to the Hodek is the arrangement of Stillman (*Fig.* 231), shown in U.S. patent 484831, 1892. It is largely used in Hawaii, and is indicated in section in *Fig.* 231, as located in the body of a vessel. It is made up of three horizontal plates, each carrying a number of two-inch tubes, a tube in one plate being opposite a blank in others. A similar arrangement may be located as vertical baffles in a horizontal length of pipe, and in this case the chamber takes the form of two opposed pyramidal vessels. Types of centifugal separators are indicated in *Figs.* 232 and 233, the former being due to McNeil.

What is perhaps the most commonly used arrangement is indicated in *Fig.* 234, and this is due to Vivien and Dujardin, being claimed in patent 2286 of 1884.

Finally a somewhat different device, based on a well-known form of oil separator, is indicated in *Fig.* 235. In this the direction of flow may equally well be opposite to that shown.

Capillary losses are found mainly in the vapour pipes after the bubbles have burst, and hence all the devices indicated above must be efficiently drained. Very often the drain pipe is led into, and terminates in, the vapour space of the effect. The downward flow of the liquid is opposed then to the rapid forward flow of the vapours, and a considerable quantity of material may be carried forward to the condenser. To avoid this the drain pipes may dip below the surface of the liquid, or an inverted syphon seal may be used. The writer, however, believes that the most satisfactory results are obtained by draining the save-alls into a receptacle external to the vessel. This receptacle is connected to the last body by a pipe and valve, one also being located on the drain pipe. A third connection communicates with the atmosphere. When this receptacle is full, communication to the save-all is cut off, and the air cock and valve leading to the last effect are opened, when the contents are sucked therein.

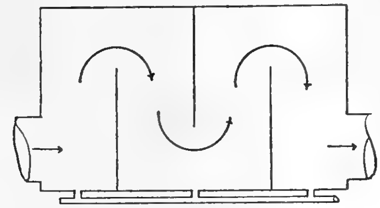

Fig 228

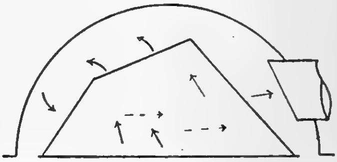

Fig 232

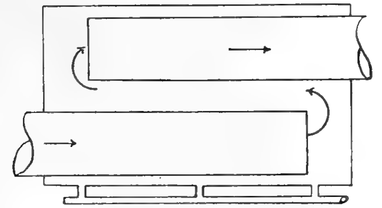

Fig 229

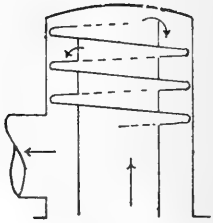

Fig 233

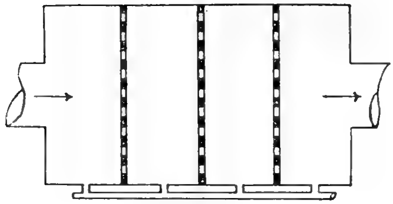

Fig 230

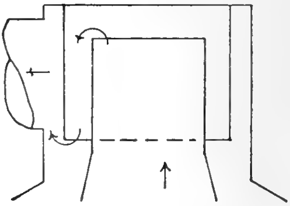

Fig 234

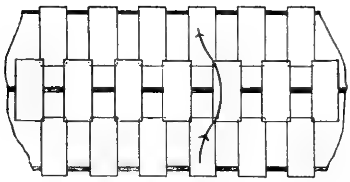

Fig 231

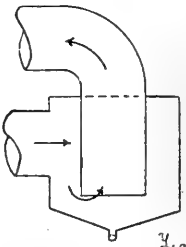

Fig 235

In the complete absence of these devices, the writer has seen 3 per cent. of the juice lost in the evaporation, a loss reduced to less than 0·1 per cent. by their well-advised application.

Scale in Evaporators.—The concentration of the juice which obtains in the evaporators results in certain of the non-sugars becoming insoluble, and being deposited as "scale" on the heating surfaces of the evaporators. In addition to the scale formed from bodies originally in solution, there is that caused by the introduction of suspended matter due to inefficient defecation. The latter deposit is found mostly in the first cell, and the former in the last cell, where the concentration of the juice is greatest. The scales which are found in cane sugar houses fall into three classes—silicate, phosphate, and sulphate scales, the two former being the most frequent. The quantity of scale formed is also a function of the lime employed, which may introduce silica. The use or non-use of phosphoric acid and sulphur will affect the quantity of the phosphates and sulphates in the juice. In the absence of the use of these agents the greater portion of the phosphoric acid is precipitated and is found in the press cake. Its maximum precipitation, however, depends (*cf.* Chapter XIII) on the use of an excess of lime when simultaneously lime salts enter into solution.

Sulphates are frequently absent from the deposit of scale, but may occur in certain juices in very large quantity. The cause of this appearance is obscure; it is, however, certainly to be correlated with variety of cane.

It is evident that, while a deposit of scale due to suspended matter may be eliminated by careful work, that due to the deposit of dissolved matter is obligatory. It may be controlled by the use of selected limestone, and by using no more lime than necessary to protect the juice from inversion. The presence of sulphates in the juice is the most troublesome factor. Peck[23] advises the use of sodium carbonate in the clarification, to precipitate the lime as carbonate and to substitute sodium sulphate for calcium sulphate.

The prevention of the deposit scale has been attempted by placing in the tubes rods or chains, on which it was intended that the scale should deposit, and which by tapping continuously against the walls of the tubes would prevent the scale adhering. Rapid circulation is also believed to prevent the adherence, and the system of reversing circulation used in the Lillie horizontal film evaporators is claimed also to keep the surfaces free; but no mechanical means can alter the solubility of the substances causing scale, so that the most these schemes can do is to remove the scale from one part of the sugar house to another.

Recognising the unavoidability of scale, the means for its removal remain to be considered. The agents most often employed are caustic soda or carbonate of soda followed by hydrochloric acid. The strength of these solutions is from 1 per cent. to 2 per cent., and apparatus are boiled out periodically. The time required varies with the deposit of scale, but generally four hours' boiling under atmospheric pressure with each reagent is sufficient to maintain a reasonable efficiency in the apparatus, if done once a week.

The experiments of Peck and of Thurlow[24] indicate that generally sodium carbonate is as efficient in combination with acids as is caustic soda, and the use of the former is essential when removing a calcium sulphate scale, which has to be converted into carbonate before it can be attacked by acid. With a silica scale the use of caustic soda in indicated, and with a phosphate scale acid alone is enough, provided the scale is not protected by a layer of fats or grease. It would appear not unreasonable to use a mixture of carbonate and caustic soda. The writer's experience, however, is that all solution methods are inferior to mechanical ones as regards cost, speed, and efficiency. Small compressed-air motors operating wire brushes, and specially designed for evaporator work, are on the market. With these it is possible to really clean three tubes a minute, and, as four labourers can easily work in one cell, an apparatus can be very rapidly brushed. These apparatus are, of course, only applicable to the vertical submerged tube type, and it is the latter's amenability to mechanical cleaning that the writer regards as its one great advantage over all other types. This remark is equally applicable as between coil and calandria vacuum pans, the former of which can only be cleaned satisfactorily after dismantling.

A deposit of another nature forms on the steam side of the tubes in the first cell, and has its origin in oil volatilized in the back pressure steam. This deposit can be reduced to a minimum by the use of an efficient oil separator, of which there are many types on the market. Even with these some oil will find its way to the tubular bundle, and it will always be serviceable to remove this in the dead season. This can be done efficiently by filling the calandria with water, on the surface of which one or two inches of kerosene is floated. The water is allowed to drain out slowly, occupying four or five months in doing so. The fermentation of molasses and water will also effect the removal of this grease. A deposit of fats may also sometimes be found on the steam side of the tubes in the other cells. This probably has its origin from the vegetable fats and lecithins present in the juice. In the dead season it may be advisable to examine these bodies also. In the absence of fats a considerable amount of rust may likewise be found in them. This rust is readily soluble in very dilute acids, and its removal at the end of every season will tend towards maintaining the efficiency of the apparatus. Whenever an excessive fall in temperature is noticed in the first body, oil on the steam side may be suspected, and this oil may go on accumulating till the capacity of the apparatus is notably diminished. Oil will also be found on the interior of the coils in the vacuum pans which are used for exhaust steam, and these may be cleaned in the dead season by swabbing with kerosene.

PROPERTIES OF SATURATED STEAM.

(After Peabody.)

ENGLISH UNITS.

Temperature degrees Fahrenheit.	Pressure lbs. per square inch.	Heat of the Liquid.	Heat of Vaporization.	Specific Volume cubic feet per pound.
32	0·0886	0·0	1071·7	3308
33	0·0923	1·0	1071·2	3179
34	0·0960	2·0	1070·7	3062
35	0·0999	3·0	1070·2	2950
36	0·1040	4·0	1069·7	2842
37	0·1082	5·0	1069·2	2737
38	0·1126	6·1	1068·7	2634
39	0·1171	7·1	1068·2	2538
40	0·1217	8·1	1067·6	3446
41	0·1265	9·1	1067·1	2358
42	0·1315	10·1	1066·6	2272
43	0·1367	11·1	1066·0	2190

PROPERTIES OF SATURATED STEAM.—*Continued.*

ENGLISH UNITS.

Temperature degrees Fahrenheit.	Pressure lbs. per square inch.	Heat of the Liquid.	Heat of Vaporization.	Specific Volume cubic feet per pound.
44	0·1421	12·1	1065·5	2110
45	0·1476	13·1	1065·0	2035
46	0·1533	14·1	1064·4	1963
47	0·1591	15·1	1063·9	1894
48	0·1652	16·1	1063·4	1828
49	0·1715	17·1	1062·8	1764
50	0·1780	18·1	1062·3	1703
51	0·1848	19·1	1061·8	1643
52	0·1918	20·1	1061·3	1586
53	0·1990	21·1	1060·7	1531
54	0·2064	22·1	1060·2	1479
55	0·2140	23·1	1059·7	1429
56	0·2219	24·1	1059·1	1381
57	0·2301	25·1	1058·6	1335
58	0·2385	26·1	1058·1	1291
59	0·2471	27·1	1057·6	1248
60	0·2561	28·1	1057·0	1207
61	0·2654	29·1	1056·5	1167
62	0·2750	30·1	1056·0	1128
63	0·2848	31·1	1055·5	1091
64	0·2949	32·1	1055·0	1056
65	0·3054	33·1	1054·4	1021
66	0·3161	34·1	1053·9	988
67	0·3272	35·1	1053·4	956
68	0·3386	36·1	1052·8	925
69	0·3505	37·1	1052·3	896
70	0·3627	38·1	1051·8	868
71	0·3752	39·1	1051·2	840
72	0·3879	40·1	1050·7	813
73	0·4012	41·1	1050·2	788
74	0·4149	42·1	1049·7	763
75	0·4289	43·1	1049·2	739
76	0·4434	44·1	1048·7	717
77	0·4582	45·1	1048·1	695
78	0·4736	46·1	1047·6	674
79	0·4894	47·1	1047·1	654
80	0·5056	48·1	1046·5	634
81	0·5223	49·1	1046·0	615
82	0·5395	50·1	1045·4	596
83	0·5572	51·1	1044·9	578
84	0·5754	52·1	1044·4	561
85	0·5942	53·1	1043·9	544
85	0·6134	54·1	1043·3	528
87	0·6332	55·1	1043·8	513
88	0·6535	56·1	1042·3	498·0
89	0·6745	57·1	1041·7	483·4
90	0·6960	58·1	1041·2	469·2
91	0·7181	59·1	1040·6	455·4

PROPERTIES OF SATURATED STEAM.—*Continued.*

ENGLISH UNITS.

Temperature degrees Fahrenheit.	Pressure lbs. per square inch.	Heat of the Liquid.	Heat of Vaporization.	Specific Volume cubic feet per pound.
92	0·7408	60·1	1040·1	442·0
93	0·7642	61·1	1039·5	429·1
94	0·7882	62·1	1039·0	416·7
95	0·8128	63·1	1038·5	404·8
96	0·8381	64·1	1037·9	393·3
97	0·8640	65·0	1037·4	382·1
98	0·8907	66.0	1036·8	371·3
99	0·9180	67·0	1036·3	360·9
100	0·9461	68·9	1035·7	350·8
101	0·9751	69·0	1035·1	341·1
102	1·0047	70·0	1034·6	331·6
103	1·0351	71·0	1034·0	322·4
104	1·0663	72·0	1033·5	313·5
105	1·098	73·0	1032·9	304·8
106	1·131	74·0	1032·4	296·4
107	1·165	75·0	1031·8	288·2
108	1·200	76·0	1031·2	280·2
109	1·235	77·0	1030·7	272·6
110	1·271	78·0	1030·1	265·2
111	1·308	79·0	1029·6	258·0
112	1·347	80·0	1029·0	251·1
113	1·386	81·0	1028·4	244·4
114	1·426	82·0	1027·8	238·0
115	1·467	83·0	1027·2	231·8
116	1·509	84·0	1026·7	225·7
117	1·552	85·0	1026·1	219·8
118	1·597	86·0	1025·5	214·0
119	1·642	87·0	1025·0	208·4
120	1·689	88·0	1024·4	203·0
121	1·737	89·0	1023·8	197·8
122	1·785	90·0	1023·2	192·7
123	1·835	91·0	1022·7	187·7
124	1·886	92·0	1022·1	182·9
125	1·938	93·0	1021·5	178·3
126	1·992	94·0	1021·0	173·8
127	2·047	95·0	1020·4	169·4
128	2·103	96·0	1019·8	165·2
129	2·161	97·0	1019·3	161·1
130	2·220	98·0	1018·7	157·1
131	2·280	99·0	1018·1	153·2
132	2·441	100·0	1017·6	149·5
133	2·403	101·0	1017·0	145·8
134	2·467	102·0	1016·5	142·2
135	2·533	103·0	1015·9	138·8
136	2·600	104·0	1015·4	135·4
137	2·669	105·0	1014·8	132·1
138	2·740	106·0	1014·2	128·9
139	2·812	107·0	1013·6	125·8

PROPERTIES OF SATURATED STEAM.—*Continued.*

ENGLISH UNITS.

Temperature degrees Fahrenheit.	Pressure lbs. per square inch.	Heat of the Liquid.	Heat of Vaporization.	Specific Volume cubic feet per pound.
140	2·885	108·0	1013·1	122·8
141	2·960	109·0	1012·5	119·9
142	3·037	110·0	1011·9	117·1
143	3·116	111·0	1011·4	114·3
144	3·196	112·0	1010·8	111·6
145	3·278	113·0	1010·2	109·0
146	3·361	114·0	1009·6	106·5
147	3·447	115·0	1009·0	104·0
148	3·535	116·0	1008·4	101·6
149	3·624	117·0	1007·8	99·2
150	3·715	118·0	1007·2	96·9
151	3·808	119·0	1006·7	94·7
152	3·903	120·0	1006·1	92·5
153	4·000	121·0	1005·5	90·4
154	4·099	122·0	1004·9	88·4
155	4·200	123·0	1004·3	86·4
156	4·303	124·0	1003·7	84·5
157	4·409	125·0	1003·1	82·6
158	4·517	126·0	1002·5	80·7
159	4·626	127·0	1002·0	78·9
160	4·738	128·0	1001·4	77·2
161	4·852	129·0	100·08	75·4
162	4·969	130·0	1000·2	73·7
163	5·088	131·0	999·6	72·1
164	5·210	132·0	999·0	70·6
165	5·443	133·0	998·4	69·1
166	5·460	134·0	997·9	67·7
167	5·589	135·0	997·3	66·2
168	5·720	136·0	996·7	64·8
169	5·853	137·0	996·1	63·4
170	5·990	138·0	995·5	62·0
171	6·129	139·0	994·9	60·6
172	6·270	140·0	994·3	59·3
173	6·415	141·0	993·7	58·1
174	6·563	142·0	993·1	56·9
175	6·714	143·0	992·5	55·7
176	6·868	144·0	991·9	54·5
177	7·025	145·0	991·3	53·4
178	7·185	146·0	990·7	52·3
179	7·346	147·0	990·1	52·2
180	7·510	148·0	989·5	50·2
181	7·678	149·0	988·9	49·13
182	7·849	150·1	988·3	48·11
183	8·024	151·1	987·7	47·12
184	8·202	152·1	987·1	46·17
185	8·383	153·1	986·5	45·23
186	8·568	154·1	985·9	44·33
187	8·756	155·1	985·3	43·45

PROPERTIES OF SATURATED STEAM.—*Continued*

ENGLISH UNITS.

Temperature degrees Fahrenheit.	Pressure lbs. per square inch.	Heat of the Liquid.	Heat of Vaporization.	Specific Volume cubic feet per pound.
188	8·947	156·1	984·7	42·59
189	9·141	157·1	984·0	41·75
190	9·339	158·1	983·4	40·92
191	9·541	159·1	982·8	40·11
192	9·746	160·1	982·2	39·31
193	9·955	161·1	981·5	38·53
194	10·168	162·1	980·9	37·77
195	10·385	163·1	980·3	37·03
196	10·605	164·1	979·7	36·31
197	10·830	165·1	979·1	35·61
198	11·059	166·2	978·4	34·93
199	11·291	167·2	977·8	34·27
200	11·528	168·2	977·2	33·62
201	11·768	169·2	976·6	32·99
202	12·013	170·2	976·0	32·37
203	12·261	171·2	975·4	31·75
204	12·514	172·2	974·7	31·15
205	12·771	173·2	974·1	30·56
206	13·033	174·2	973·5	29·98
207	13·299	175·2	972·8	29·41
208	13·570	176·2	972·2	28·86
209	13·845	177·2	971·6	28·32
210	14·125	178·3	970·9	27·80
211	14·409	179·3	970·3	27·29
212	14·698	180·3	969·7	26·78
213	14·992	181·3	969·1	26·29
214	15·291	182·3	968·5	25·81
215	15·595	183·3	967·8	25·34
216	15·903	184·3	967·2	24·88
217	16·217	185·3	966·5	24·43
218	16·536	186·3	965·9	23·99
219	16·859	187·4	965·2	23·56
220	17·188	188·4	964·6	23·14
221	17·523	189·4	964·0	22·75
222	17·863	190·4	963·3	22·33
223	18·208	191·4	962·7	21·93
224	18·558	192·4	962·0	21·54
225	18·914	193·4	961·4	21·16
226	19·275	194·4	960·7	20·78
227	19·643	195·4	960·1	20·42
228	20·02	196·5	959·4	20·07
229	20·40	197·5	958·7	19·72
230	20·78	198·5	958·1	19·37
231	21·17	199·5	957·4	19·04
232	21·57	200·5	956·8	18·71
233	21·97	201·5	956·1	18·39
234	22·38	202·5	955·4	18·08
235	22·79	203·6	954·8	17·77

PROPERTIES OF SATURATED STEAM.—*Continued.*

ENGLISH UNITS.

Temperature degrees Fahrenheit.	Pressure lbs. per square inch.	Heat of the Liquid.	Heat of Vaporization.	Specific Volume cubic feet per pound.
236	23·21	204·6	954·1	17·46
237	23·64	205·6	953·4	17·16
238	24·08	206·6	952·8	16·87
239	24·52	207·6	952·1	16·59
240	24·97	208·6	951·4	16·31
241	25·42	209·6	950·8	16·04
242	25·88	210·7	950·1	15·77
243	26·35	211·7	949·4	15·51
244	26·83	212·7	948·7	15·26
245	27·31	213·7	948·1	15·01
246	27·80	214·7	947·4	14·77
247	28·29	215·7	946·7	14·52
248	28·79	216·7	946·0	14·28
249	29·30	217·7	945·4	14·05
250	29·82	218·8	944·7	13·82
251	30·35	219·8	944·0	13·59
252	30·88	220·8	943·3	13·37
253	31·42	221·8	942·6	13·16
254	31·97	222·8	941·9	12·94
255	32·53	223·8	941·2	12·73
256	33·09	224·9	940·5	12·53
257	33·66	225·9	939·8	12·33
258	34·24	226·9	939·1	12·13
259	34·83	227·9	938·4	11·94
260	35·42	229·0	937·8	11·75
261	36·02	230·0	937·1	11·57
262	36·64	231·0	936·4	11·39
263	37·26	232·0	935·7	11·21
264	37·89	233·0	935·0	11·04
265	38·53	234·0	934·3	10·87
266	39·17	235·0	933·6	10·70
267	39·83	236·1	932·9	10·53
268	40·49	237·1	932·1	10·37
269	41·16	238·1	931·4	10·21
270	41·84	239·1	930·7	10·05
271	42·54	240·2	930·0	9·901
272	43·24	241·2	929·3	9·749
273	43·95	242·2	928·6	9·599
274	44·67	243·2	927·9	9·453
275	45·39	244·2	927·2	9·309
275·8	46·0	245·1	926·6	9·195
277·16	47·0	246·4	925·6	9·012
278·47	48·0	247·8	924·7	8·838
279·76	49·0	249·1	923·8	8·670
281·03	50·0	250·4	922·8	8·507
282·28	51·0	251·7	921·9	8·350
283·52	52·0	253·0	921·0	8·198
284·74	53·0	254·2	920·1	8·052

PROPERTIES OF SATURATED STEAM.—*Continued.*

ENGLISH UNITS.

Temperature degrees Fahrenheit.	Pressure lbs. per square inch.	Heat of the Liquid.	Heat of Vaporization.	Specific Volume cubic feet per pound.
285·93	54·0	255·4	919·3	7·912
287·09	55·0	256·6	918·4	7·778
288·25	56·0	257·8	917·6	7·647
289·40	57·0	259·0	916·7	7·519
290·53	58·0	260·1	915·9	7·397
291·64	59·0	261·3	915·1	7·280
292·74	60·0	262·4	914·3	7·166
293·82	61·0	263·5	913·5	7·055
294·88	62·0	264·6	912·7	6·949
295·93	63·0	265·7	911·9	6·846
296·97	64·0	266·7	911·1	6.745
298·00	65·0	267·8	910·4	6·647
299·02	66·0	268·8	909·6	6·552
300·02	67·0	269·8	908·9	6·460
301·01	68·0	270·9	908·1	6·370
301·99	69·0	271·9	907·4	6·283
302·96	70·0	272·9	906·6	6·199
303·91	71·0	273·8	905·9	6·117
304·86	72·0	274·8	905·2	6·036
305·79	73·0	275·8	904·5	5·958
306·72	74·0	276·7	903·8	5·882
307·64	75·0	277·7	903·1	5·807
308·54	76·0	278·6	902·4	5·735
309·44	77·0	279·5	901·8	5·665
310·33	78·0	280·4	901·1	5·597
311·21	79·0	281·3	900·4	5·530
312·08	80·0	282·2	899·8	5·466
312·94	81·0	283·1	899·1	5·403
313·79	82·0	283·9	898·5	5·342
314·63	83·0	284·8	897·8	5·281
315·47	84·0	285·7	897·2	5·120
316·30	85·0	286·5	896·6	5·161
317·12	86·0	287·4	895·9	5·104
317·93	87·0	288·2	895·3	5·048
318·73	88·0	289·0	894·7	4·993
319·53	89·0	289·9	894·1	4·939
320·32	90·0	290·7	893·5	4·886
321·10	91·0	291·5	892·9	4·835
321·88	92·0	292·3	892·3	4·785
322·65	93·0	293·1	891·7	4·736
323·41	94·0	293·9	891·1	4·689
324·16	95·0	294·6	890·5	4·544
324·91	96·0	295·4	889·9	4·599
325·66	97·0	296·1	889·3	4·556
326·40	98·0	296·9	888·7	4·514
327·13	99·0	297·7	888·2	4·473
327·86	100·0	298·5	887·6	4·432
328·58	101·0	299·2	887·0	4·391

PROPERTIES OF SATURATED STEAM.—*Continued.*

ENGLISH UNITS.

Temperature degrees Fahrenheit.	Pressure lbs. per square inch.	Heat of the Liquid.	Heat of Vaporization.	Specific Volume cubic feet per pound.
329·30	102·0	299·9	886·5	4·151
330·01	103·0	300·6	885·9	4·311
330·72	104·0	301·4	885·3	4·272
331·42	105·0	302·1	884·8	4·233
332·11	106·0	302·8	884·3	4·195
332·79	107·0	303·5	883·7	4·157
333·48	108·0	304·2	883·2	4·120
334·16	109·0	304·9	882·6	4·083
334·83	110·0	305·6	882·1	4·047
335·50	111·0	306·3	881·6	4·011
336·17	112·0	307·0	881·0	3·976
336·83	113·0	307·7	880·5	3·943
337·48	114·0	308·3	880·0	3·909
338·14	115·0	309·0	879·5	3·876
338·78	116·0	309·7	879·0	3·844
339·32	117·0	310·3	878·5	3·812
340·06	118·0	311·0	878·0	3·781
340·69	119·0	311·7	877·4	3·752
341·31	120·0	312·3	876·9	3·723
341·94	121·0	312·9	876·4	3·694
341·56	122·0	313·6	875·9	3·665
343·18	123·0	314·2	875·4	3·637
343·79	124·0	314·8	875·0	3·609
344·39	125·0	315·5	874·5	3·581
345·00	126·0	316·1	874·0	3·554
345·60	127·0	316·7	873·5	3·527
346·20	128·0	317·3	873·0	3·501
346·79	129·0	317·9	872·6	3·476
347·38	130·0	318·6	872·1	3·451

REFERENCES IN CHAPTER XVIII.

1. "Manual of the Steam Engine and other Prime Movers." London, 1859.
2. *Trans. Institution of Naval Architects*, 1894, 36, 342.
3. *Ann. Chim. Phys.*, 1846, 24, 107.
4. *Zeits Ver. Deut. Ingenieure*, 1900, 1724.
5. *Zeits. Ver. Deut. Ingenieure*, 1902, 1900.
6. From Vranchen and Aulard's "Fabrication du Sucre."
7. Proc., Philosophical and Literary Society of Manchester, 1875, 14, 7.
8. From Lucke's "Engineering Thermodynamics."
9. *Jour. Am. Soc. Mech. Eng.*, 1913, 34, 1633.
10. La. Ex. Sta., Bull. 149.

11. *Int. Sug. Jour.*, 1912, 14, 386.
12. *Int. Sug. Jour.*, 1915, 17, 262.
13. " Evaporation in the Beet and Cane Sugar Factory," London, 1914.
14. *Le Génie Industriel*, 1852, 3, 10–16.
15. *Sucrèrie indigène et coloniale*, 1882, 19, 330.
16. *S. C.*, 1880, 12, 424.
17. *Zeit. Zuck. Böh*, 1882, 7, 187.
18. *Jour. Fab. Suc.*, 1911, 52, 37.
19. *Circular Hebdomaire de Syndicat de Fabricants du Sucre*, 1913, 1263.
20. *Zeit. Zuck. Böh.*, 1912, 37, 259.
21. *Jour. Chem. Soc.*, 1885, 55, 568.
22. *Ber.*, 1891, 24, 3602.
23. H.S.P.A. Ex. Sta., Agric. Ser., Bull. 21.
24. *Int. Sug. Jour.*, 1912, 14, 328.

CHAPTER XIX

SUGAR BOILING AND CRYSTALIZATION-IN-MOTION.

AFTER concentration in the multiple effect the juice emerges as a thick syrup, containing from 50 to 70 per cent. of gravity solids. The actual density obtained is controlled by the caprice of the executive, by the capacity of the evaporators, by the purity of the juice, and by the type of sugar that is being made. Considered from the standpoint of fuel economy, as high a density as possible should be obtained. Sugar boilers, however, find difficulty in maintaining an even regular grain when the syrup is delivered to them at too high a density, since in this case the sugar deposits so rapidly that the successive charges do not have time to mix thoroughly with the contents of the pan before granulation occurs. There should, however, be no difficulty in handling syrups at 60° Brix, and this density may be regarded as standard in Cuba. With the extremely pure juices obtained in Hawaii from the Lahaina cane, syrups up to 70° Brix are treated, 65° Brix being the average with the less pure juice from Yellow Caledonia cane. It should be noted that as the purity increases, the difference between gravity solids or Brix and absolute solids decreases, and herein lies the possibility of working at so high a Brix with the purer juices.

In making 96 test sugar, the syrup usually undergoes no treatment other than being allowed to casually stand in the supply tanks as stock in process. A certain amount of settling takes place here, the bottoms being diluted and run back to the scum tanks as may be convenient. The dirt that is found here is partly due to inefficient settling of the juice and partly to matter that has become insoluble on concentration. To the presence of suspended matter trouble in boiling and in drying the massecuites may often be traced.

When making white sugar, the syrup is allowed to settle and to deposit its suspended matter or else is filtered in stocking, leaf, or plate and frame presses. For satisfactory subsidence concentration to not more than 50° Brix. is necessary, whereby the consumption of steam is much increased. Filtration is also limited by concentration, the rate falling rapidly at concentrations above 60° Brix.

Algebraical Theory of Sugar Boiling.—The whole process of, and principles involved in, sugar boiling can be explained on a very simple algebraical reasoning. Starting with a syrup, the continued removal of water by evaporation allows a point to be reached at which the water is insufficient to keep all the sugar in solution, which then begins to crystallize out. If the syrup consisted of sugar and water only, the complete removal of the latter would afford a complete recovery of the former in a dry and pure state. Since, however, bodies other than sugar are present, some water must be left in the magma or massecuite sufficient to keep the non-sugar in solution, whereby a means is afforded for separating the solid crystals from the mother liquor or molasses.

Accumulated experience has shown that, in exhausted cane molasses, for one part of non-sugar five-elevenths part of water (more or less) is required to keep the non-sugar in solution, and that each part of water simultaneously dissolves 1·8 part (more or less) of sugar. A product such as this forms a typical exhausted molasses, from which sugar will no longer crystallize out when water is removed. It will be of composition:—Absolute solids, 80 per cent.; polarization, 27; sugar, 36 per cent.; non-sugar, 44 per cent.; absolute purity, 45; gravity solids, 90 per cent.; gravity purity, 40; polarization gravity purity, 30. This composition is not to be taken as being fixed, but merely as representative of good average conditions, and is one which is not infrequently bettered in practice.

Now, let x = absolute solids in a massecuite,
s = solubility of sugar in the water remaining in the massecuite,
p = absolute purity of the massecuite,
m = absolute purity of the molasses.

Then, $(1 - x)$ = water in the massecuite,
$s\,(1 - x)$ = sugar in solution, i.e., in the molasses,
$x\,(1 - p)$ = non-sugar, and

$$m = \frac{s\,(1 - x)}{s\,(1 - x) + x\,(1 - p)} \qquad \dots\dots\dots\dots \quad (1)$$

$$x = \frac{s - m\,s}{s + m - m\,s - m\,p} \qquad \dots\dots\dots\dots \quad (2)$$

In the table next following are calculated out values of 100 x for $m = 0{\cdot}45$, $s = 1{\cdot}8$ and $p = 0{\cdot}45$ to $1{\cdot}00$. This calculation has been made on a basis of absolute solids or dry substance, and is initially referred to absolute purity, as opposed to gravity polarization purity. After obtaining the values of 100 x on this basis, translation was made empirically to a gravity solids polarization basis, since it is to this that the routine control observations are referred.

This table gives the percentage of solids to which syrups must be concentrated to afford a massecuite consisting of crystals and exhausted molasses, and according to this reasoning all that is necessary to obtain *all* the crystals in *one* operation is to push the concentration to the indicated limit, and then to separate the crystals from the mother liquor, which now will be exhausted molasses. This end cannot be achieved so simply in practice for the following reasons:—

1. With the higher purities so great a concentration would result in so thick a material that it could not be mechanically handled or even removed from the vacuum pan.

2. The hot massecuite would have to be cooled to allow the sugar kept in solution to deposit.

3. The deposit of sugar would take place very slowly, and much would separate as fine grain incapable of immediate recovery.

Accordingly, one of two schemes has to be employed to obtain all the sugar that is capable of recovery. These are:—

1. *Repeated Boilings.* In this method the concentration in each operation is carried only so far as to give a massecuite capable of manipulation. The resulting crystals are removed and the residue (unexhausted molasses) is again concentrated, with the production of a second crop of crystals, which is in its

turn separated from its mother liquor. This process is repeated until a point is reached where the concentration can be pushed so far that crystals and an exhausted molasses result. It is at once evident that the number of operations required to obtain exhausted molasses increases with the original purity of the syrup. With purities of 90 and over, as many as five operations may be required, the last operation starting with a molasses of from 50 to 55 purity.

2. *Reduction of Purity.* This scheme, often referred to as "boiling in molasses," is almost always worked in combination with crystallization-in-motion processes. The material used for the reduction of purity may for the moment be considered as exhausted molasses. Its effect may be looked upon as mechanical, and as merely affording sufficient fluidity for the manipulation of the very concentrated purer massecuites.

CORRESPONDENCE BETWEEN PURITY AND CONCENTRATION OF MASSECUITES TO AFFORD EXHAUSTED MOLASSES.

Absolute purity.	Absolute solids.	Gravity polarization. purity.	Gravity solids.	Absolute purity.	Absolute solids.	Gravity polarization. purity.	Gravity solids.
45	80·0	30·0	90·0	73	89·1	65·6	94·5
46	80·3	31·3	90·2	74	89·5	66·9	94·7
47	80·6	32·5	90·3	75	89·8	68·2	94·9
48	80·9	33·8	90·4	76	90·2	69·4	95·1
49	81·2	35·1	90·6	77	90·5	70·7	95·2
50	81·5	36·4	90·7	78	90·9	72·0	95·4
51	81·8	37·6	90·9	79	91·3	73·2	95·6
52	82·1	38·9	91·0	80	91·6	74·5	95·8
53	82·4	40·2	91·2	81	92·0	75·8	96·0
54	82·7	41·4	91·3	82	92·4	77·0	96·2
55	83·0	42·7	91·5	83	92·8	78·3	96·4
56	83·3	44·0	91·6	84	93·2	79·6	96·6
57	83·6	45·2	91·8	85	93·7	80·9	96·8
58	83·9	46·5	91·9	86	94·0	82·1	97·0
59	84·2	47·8	92·1	87	94·4	83·4	97·2
60	84·5	49·1	92·2	88	94·9	84·7	97·4
61	84·8	50·3	92·4	89	95·3	86·0	97·6
62	85·1	51·6	92·5	90	95·7	87·2	97·8
63	85·5	52·9	92·7	91	96·1	88·5	98·0
64	85·9	54·1	92·9	92	96·5	89·8	98·2
65	86·3	55·4	93·1	93	96·9	91·0	98·4
66	86·6	56·7	93·3	94	97·3	92·3	98·6
67	87·0	58·0	93·5	95	97·8	93·6	98·9
68	87·3	59·2	93·6	96	98·2	94·9	99·1
69	87·7	60·5	93·8	97	98·6	96·1	99·3
70	88·1	61·8	94·0	98	99·1	97·4	99·5
71	88·4	63·1	94·2	99	99·5	98·7	99·7
72	88·8	64·3	94·4	100	100·0	100·0	100·0

On this basis all the sugar capable of recovery could be obtained in one operation by the systematic circulation of, and introduction into the system of exhausted molasses, which would appear at the end of each operation unchanged in composition, but increased in quantity. The quantity corresponding to the operation just completed is removed from the process, the balance serving to reduce the purity of the subsequent boilings. The processes used are, however, more complex and are described later.

Fall in Purity. The equation (1) found above gives the value of m, or the purity of the molasses obtained when the absolute solids, x, the solubility, s, of the sugar in the water remaining and the purity, p, of the massecuite are known. When p is unity, or when the massecuite is of 100 purity, the value of m is also 1 for all values of x. That this must be the case is self-evident. Again, when p is 0·45 and when x is 0·80 the value of m is found to be also 0·45. The numerical difference between p and m is the *fall in purity* between massecuite and molasses. This figure is determined regularly as part of the routine, and is used by sugar boilers as a guide in their art, and by the executive as a control over the operatives. From what has already been written it follows that the fall in purity is zero, both when the purity of the massecuite is 100, and when it is 45 or whatever figure may be taken as representative of exhausted molasses. Between these limits the magnitude of the fall will have definite values and will gradually increase to a maximum as either p falls in value from 1, or as it increases in value from 0·45. No advantage is, however, gained from calculating values of $p - m$, assigning arbitrary values to s and x, since in practice s and x are not constant; the sugar boiler will vary the value of x according to the value of p, and, since s is constant at 1·8 only when x is of the value corresponding to the production of exhausted molasses, s will also vary as x varies. Assigning however values such as occur in practice to s, p and x, it will be found that the maximum fall in purity which may be looked for is from 25 to 30 units, and that this fall will only be obtained when p is of the value 60 to 80 referred to polarization gravity purity. Finally, experience has shown that from massecuites of 60 polarization gravity purity molasses of 30 purity (taken as the standard of exhausted molasses) can be obtained, and hence it follows that from a purity of 60 downwards the fall in purity will decrease regularly from a maximum of 30 units to zero.

Technique of Sugar Boiling.—The actual process of sugar boiling may be divided into three parts: the granulation, the growing of the crystals, and the bringing up to strike. Granulation is obtained by continuing the concentration of the syrup until a supersaturated solution is formed, after which sugar must eventually separate, the crystallization taking place in the shape of minute barely visible grains. The actual formation is usually obtained by a sudden lowering of the temperature, as by increasing the injection water, by shutting off steam or by introducing a charge of cold syrup.

Dependent on the type of sugar required, the quantity of syrup used for graining is varied. Evidently the less syrup taken in the smaller is the number of crystals formed, and the larger will be the size of the crystals obtained on the completion of the strike. One-sixth of the total quantity of syrup taken in as the graining charge will afford a small crystal of side averaging 0·5 mm., and one-twelfth will give a grainy sugar with a side of about 1 mm. This is the least quantity that can be used in pans, as they are usually constructed. When it is wished to still further increase the size of the crystal, as in the manufacture of fancy sugars, the operation known as "washing" is employed. In this process the boiler, after obtaining crystals of a certain size, takes in large charges of syrup, juice or even water, whereby the smaller crystals are dissolved, the deposit continuing on those that remain. A second device to this end is known as "cutting" or "doubling," a portion of the contents of a finished strike being retained in the pan to serve as a "footing" or "pied-de-cuite" for the next operation.

After having obtained the crystals in such quantity as his knowledge of his art demands, the boiler proceeds to feed the grain by the introduction of more syrup, which may be fed into the pan continuously or intermittently.

In so doing, and in controlling the rate of deposit or of evaporation the operator is guided by the senses of sight and touch, especially as indicated by the viscosity of the mother-liquor, in small samples withdrawn from the pan by the proof-stick. Of all operations in the sugar-house this is one that has to be learnt by experience, and which cannot be described.

The rate at which the sugar deposits on the crystal is a function of the purity, increasing as that increases. Under average raw sugar conditions four hours is the over-all average time necessary for a strike, this period falling to two hours in a refinery where a material of 98 purity is worked, and increasing to six hours with material of lower purity.

The one danger against which the boiler has to guard is the formation of "false grain" or of a second independent granulation. This may occur through a sudden fall in the steam pressure or by a sudden increase in the vacuum, both causes acting through a fall in temperature of the contents of the pan. It may again be caused by the introduction of too large a charge which does not mix well with the material already in the pan, and is always more likely to occur when the circulation is faulty due to bad design. A cause of another nature happens when making sugar of large grain, as there is a limit to the size to which the crystal can be grown, unless the rate of deposit is proportionately decreased. When false grain does occur the boiler has two means of removing the objectionable small crystals. He may raise the temperature in the pan or introduce an excessive charge of syrup or even juice. Both of these devices are intended to wash out or dissolve the false grain. The trouble due to false grain presents itself in the drying of the massecuite and is further discussed in the next chapter.

After all the syrup is introduced into the pan, the mass is concentrated to the striking point, where again the operator is guided by his sense of sight and touch. On discharge from the pan, massecuites of whatever purity will be found to have a density neighbouring on 93° Brix, but the actual water content will be found, of course, to be very far from constant, as must be the case if materials of different purities are of the same degree Brix.

It is a common belief that massecuites boiled hot give a hard grain. Although the hardness may possibly be controlled by physical treatment, hardness in this connection is psychological rather than actual, since with massecuites boiled at a low temperature the crystals tend to stick together, and what the brain registers as softness from the sense of touch is rather friability.

In place of forming grain from syrup, crystals of sugar may be taken into the pan. This process, known as *seeding*, is due to Lebaudy (patent 42 of 1865).

In the raw sugar industry seeding is mainly used as a means of utilizing and obtaining as first product without remelting the small grained sugars that result from low grade massecuites boiled blank. About 1 ton of this material is used per 20 tons of massecuite in the pan.

Supersaturation.—In the section immediately preceding a sketch of the operation of sugar boiling is given from the craftsman's point of view. The establishment of a definite theory of the operation based on the conception of supersaturation is due to Claassen.[1] By a saturated solution is meant one that will neither deposit nor yet dissolve the solid which is in solution, a position of equilibrium between solvent and solid being obtained. The process of deposition of a solid from solution after the saturation point is passed is not however instantaneous, and it is possible by means of continued evaporation to obtain solutions which in the case of sugar syrups may contain as much as 50 per cent. more solid than corresponds with saturation. Such solutions are, of course, in an unstable equilibrium. If S be the solubility of sugar in saturated solution, and S_1 be that in supersaturated solution, the ratio S_1/S is termed by Claassen the coefficient of supersaturation. Claassen's system of boiling consists in maintaining in the massecuite at various periods of the cycle such definite coefficients of supersaturation as experience has shown to be desirable, and actually this is what the capable sugar boiler unknowingly does in the practice of his art. In the scheme of Claassen, however, definite numerical values of the coefficient are connected with the different stages of the operation, and these are obtained through the medium of an instrument known as a brasmoscope or brixometer and described in a later section. This instrument is based on a definite physical law, and its indications are substituted for the sugar boiler's senses of sight and touch.

Before sugar will crystallize from solution, the latter has to become supersaturated, and for purer materials such as straight juice Claassen states that the coefficient should be about 1·2, as at that condition crystals will readily form with the devices indicated in the previous section. After crystals have once been formed they themselves exercise an influence on the deposit of sugar, and so high a supersaturation is not required. During the growing of the grain the coefficient should be maintained between 1·0 and 1·2—that is to say, the valve should be opened to admit a charge of syrup when the coefficient rises to 1·2 and closed when it falls to 1·0. If a continuous feed system is followed the coefficient should be maintained at 1·1. As the sugar crystallizes out the mother liquor becomes less and less pure, so that the coefficient should be raised so as to maintain the rate of deposit, and finally at striking it should reach 1·3.

In boiling to grain products of lower purity, such as first molasses, supersaturation coefficients considerably higher must be employed, rising to 1·5 to 1·6 with material of 60 purity, whence exhausted molasses is expected. This point is discussed more fully under the section "Crystallization-in-Motion."

Determination of the Supersaturation.—The determination of the supersaturation is based on the physical law which states that the elevation of the boiling point (*cf.* Chapter XVIII) is independent of the temperature at which ebullition occurs. Thus the boiling point of a 75 per cent. solution of cane sugar at atmospheric pressure is 231·2° F. Under a pressure of 2·42 lbs. per sq. in. or a vacuum of 25 ins. water boils at 132° F., and a 75 per cent. solution of cane sugar will boil at 132 + 13·2 or 145·2° F. Accordingly, when the temperature of the boiling mass under which ebullition occurs is known, the concentration can be obtained from reference to published tables, and, when the concentration so found is higher than that which corresponds to saturation at that temperature, the supersaturation can be obtained by calculation. Thus, if at a 25 in. vacuum the boiling mass has a temperature of 165·2° F., the elevation is 33·2° F., corresponding to 87·5 per cent. of sugar in solution, and the coefficient of supersaturation is 87·5/75·0 or 1·075.

The table below gives the elevation of the boiling point of sugar solutions. It is worth while noting that Dutrône, in 1790, published the first table of this nature, and advocated the use of the thermometer to determine the strike point.

ELEVATION OF THE BOILING POINT OF SUGAR SOLUTIONS (CLAASSEN).

Sugar, per cent.	Elevation, F°.	Sugar, per cent.	Elevation, F°.	Sugar, per cent.	Elevation, F°.	Sugar, per cent.	Elevation, F°.
75	13 ·2	81	19 ·9	86 ·5	30 ·4	89 ·5	39 ·1
75 ·5	13 ·7	81 ·5	20 ·5	86 ·75	31 ·1	89 ·75	39 ·9
76	14 ·2	82	21 ·2	87	31 ·8	90	40 ·7
76 ·5	14 ·8	82 ·5	22 ·0	87 ·25	32 ·5	90 ·25	41 ·5
77	15 ·3	83	22 ·7	87 ·5	33 ·2	90 ·5	42 ·4
77 ·5	15 ·8	83 ·5	23 ·6	87 ·75	33 ·9	90 ·75	43 ·2
78	16 ·4	84	24 ·7	88	34 ·6	91	44 ·1
78 ·5	16 ·9	84 ·5	25 ·7	88 ·25	35 ·3	91 ·25	45 ·1
79	17 ·5	85	26 ·8	88 ·5	36 ·0	91 ·50	46 ·3
79 ·5	18 ·0	85 ·5	27 ·9	88 ·75	36 ·7	91 ·75	47 ·7
80	18 ·6	86	29 ·2	89	37 ·5	92	50 ·2
80 ·5	19 ·3	86 ·25	29 ·8	89 ·28	38 ·3		

The actual determination of the elevation is made with an instrument devised in 1898 by Curin.[2] This instrument was developed by Claassen, who added to it scales whereby from observation of the vacuum and temperature the degree Brix referred to a sugar standard can at once be found.

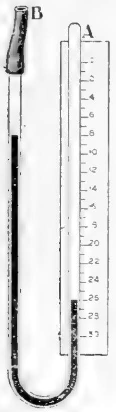

FIG. 236

The brasmoscope consists merely of an accurate thermometer (the bulb of which is immersed in the boiling mass in the pan and placed so as not to be affected by local causes such as the proximity of a steam coil) and an accurate barometer pressure gauge, the ordinary aneroid gauges not being of sufficient accuracy.

The form of barometer gauge usually found is a syphon barometer, *Fig.* 236; this consists of a **U**-tube closed at the end A and open at the end B; the tube is filled with mercury, and when held in a vertical position the difference of level between the mercury in the two limbs will give the pressure of the atmosphere in inches of mercury. This **U**-tube is fixed on a board carrying a scale and is adjusted so that the level of mercury in the long limb is at zero mark when under atmospheric pressure. If the open end be now attached to a vessel in which there is a reduced pressure, the mercury in the long limb will fall until the difference in level is that due to the pressure in the vessel connected to the short limb. The scale is so graduated as to give directly inches of vacuum in the vessel to which the short limb is attached. This instrument is not too convenient, as the gauge has always to be set at the zero mark and as a fall of pressure of, say, 1 inch in the vessel where the pressure is being measured only causes the level of the mercury in the long limb to fall half an inch, the level of the mercury in the short limb at the same time rising half an inch. The writer has therefore devised the pressure gauge described below, *Fig.* 237.

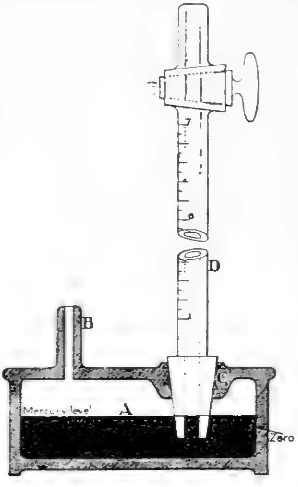

FIG. 237

A is a shallow receptacle of thick glass partly filled with mercury; on the upper side at B is a tubulure to be connected to the vapour space of the pan by stout rubber tubing; at C is the neck of the receptacle into which fits tightly the barometer tubing D, graduated in tenths of an inch. The receptacle A being filled with mercury the graduated barometer tubing is then inserted in the neck of the flask and mercury is sucked up above the level of the stop-cock at E, which is then closed. The mercury in A is then adjusted until its level is coincident with the zero mark on D. If then connection be made to the vapour space of a vacuum apparatus by way of B, the height of the column of mercury will directly measure the pressure in the pan.

After the pressure in the pan and the temperature of the boiling mass have been determined by reference to the tables, the elevation of the boiling point is found, and from this the apparent percentage of sugar in the boiling mass is determined.

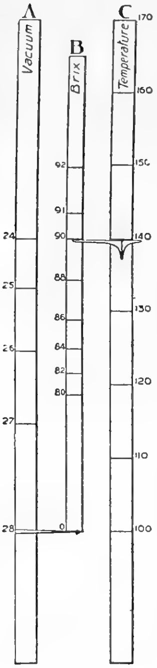

FIG. 238

Instead of using tables, Claassen has devised a mechanical scale for determining the apparent percentage of sugar. In *Fig.* 238, A, B, and C are three scales; A and C are fixed and B is a sliding scale; A is the vacuum scale and C is the temperature scale; C is graduated in equal divisions corresponding to the divisions of a thermometer; on A, opposite to the temperature divisions on C, are marked the corresponding pressures or vacua at which water boils. The sliding scale B is graduated so as to connect the elevation of the boiling point with the amount of sugar present, on the same basis as the divisions in the scale C. A determination is actually made as under.

The vacuum in the pan is 28·0 inches and the temperature is 140° F. The zero on the scale B is placed opposite 28·0 on the scale A; the division on the scale C corresponding to a temperature of 140·0° F. is then noted, and opposite this on the scale B is the division 89·9, i.e., the boiling mass contains apparently 89·9 per cent. of sugar.

Now a temperature of 140° F. is the boiling point of a 74·2 per cent. solution of cane sugar, and hence the supersaturation is 89·9/74·7, or 1·21.

It may at once be stated that it is only bodies in solution that affect the boiling point, and that sugar that has crystallized out has no effect at all. It is only then with masses boiled string-proof that the apparent sugar percentage of the whole mass is given; in other cases it is the apparent sugar percentage of the mother liquor. The scales in the brasmoscope are calculated on a sugar basis, and give only the apparent percentage of total solids expressed as sugar, exactly as the Brix spindle gives also apparent total solids. Actually the non-sugar causes weight for weight a greater elevation of the boiling point than does the sugar, so that the brasmoscope indication will always be higher than the true total solids, and this will be the more pronounced the impurer the mass that is being tested.

Application of Supersaturation Coefficients or Boiling Point Elevations.—In actual work three distinct conditions arise. These are first in the formation of grain, secondly in the deposit of sugar on grain already formed, and thirdly in the determination of the striking point. It is not possible to state from first principles what should be the elevation of the boiling point or the indicated degree Brix to conform to the saturation coefficients demanded for these conditions. For each and every factory these will have to be determined by trial and error, and when once they have been determined the operation of pan boiling can be reduced to the execution of formal rules with elimination of the personal error of the operator. When once the proper factors for a few purities have been found, those for other purities can be interpolated from the formulæ already given in connection with the development of the theory of sugar boiling.

A special application of the brasmoscope lies in the determination of the strike point of massecuites boiled blank. Such massecuites are usually less than 50 polarization gravity purity, and for each purity the brasmoscope indication at which exhausted molasses are afforded can be found. Since the brasmoscope is graduated on a sugar scale, a higher indication will be shown than is given in the table, this being due to the effect of the presence of non-sugars of less molecular weight than cane sugar. The indications corresponding to the different purities can only be found empirically, but when once one is determined the others can be calculated and definite instructions given to the operator for each and every purity.

Similarly when boiling grained strikes, especially those in the two and three massecuites processes which are intended to afford waste molasses, and which are boiled at unvarying purities, a constant Brix indication or boiling point elevation at the striking point may be determined, to which the operator is tied. In this case it should be remembered that the indication only gives the concentration of the mother liquor, and not that of the whole mass. In this way a definite routine becomes established which, when intelligently operated, tends to give regular and predetermined results without the irregularities which too frequently occur when sugar boiling is regarded as an art or craft.

The Actual Processes employed.—The oldest scheme followed is one of repeated boilings and extraction of sugar by a number of stages without return of low products to process. In this system the syrup is concentrated to a certain point, discharged from the pan and separated into crystals and molasses. These first molasses may be regarded as a syrup of lower purity, and the process repeated until eventually the purity is so much reduced that the massecuite can be concentrated to a point where the mother liquor has the composition of waste molasses. As conducted with a juice of high purity the routine might be as follows :—

1. Syrup is boiled to grain, discharged to receiver and dried at once, giving first sugar and first molasses.

2. The first molasses are boiled to grain, discharged to receiver and dried at once, giving second sugar and second molasses. The sugar obtained in this operation may be of 96 test, or if a little under it may be mixed with the first sugar, which will probably be well over 96 test.

3. The second molasses are boiled blank and discharged into small cans holding up to 500 lbs. each, allowed to cool and granulate for 3 to 4 days and then separated into third sugar and third molasses. The resulting sugar will be from 88 to 90 test, and as such is not easily marketed. It would then be remelted and returned to the syrup or used as seed grain in the pans. In either case it appears eventually as first product.

4. The third molasses are boiled blank and discharged into larger receptacles, which often take the shape of wooden vats or iron tanks. In these containers, which often, and improperly, hold two or three pan strikes, the massecuite is allowed to granulate for a period of two or three months, after which a low grade sugar and fourth molasses is obtained. The sugar is treated as in that obtained in the third boiling, and often the molasses obtained are commercially exhausted.

5. In the case of exceptionally high purities a fifth stage may be necessary to obtain a complete exhaustion. In such a case the material may be carried on from year to year, remaining in the containers for twelve months.

A routine like that described finds little use now, the objections to it being :—1. The very large storage room required. 2. The inconvenience of handling so large a proportion of low grade material. 3. The repeated passing through both pans and centrifugals of both low grade sugars and molasses. 4. Excessive labour. 5. Capital locked up in unmarketed sugar. 6. Heat and material losses inherent to the system.

The first variation from the system of repeated boilings with separation of the crystals in stages was obtained by the reduction in purity of the first massecuite by boiling in part of the molasses on hand, instead of boiling them separately. In this way in one operation in the pan and centrifugals the syrup could be separated into crystals and molasses of such a purity as would have required two or more operations if the molasses had been treated separately. This scheme did not, however, eliminate the final boilings which entail so much time and storage besides affording an inferior sugar. Eventually the process of crystallization-in-motion was devised and now finds a place in all modern factories.

Crystallization-in-Motion.—For very many years past the old West Indian houses have been accustomed to periodically disturb the magma of crystal and molasses which had been struck out into coolers. The hand-operated appliances used for this purpose were known as oscillators, and this process had in view the acceleration of the deposit of sugar. On the larger scale the first attempt to work thus seems to have been made by Vanaertenryk at Lembeek in Belgium, in 1869, who applied motion to massecuites boiled blank. Crystallizers in the modern sense of the term were first used by Bocquin and Lipinski in Russia in 1880; but the real starting point of the process is due to Wulff, who in 1884 gave a rational theory of the physics of the process. He proposed to boil lower-grade material string-proof, and to add a predetermined quantity of sugar crystals to the supersaturated mass in the receivers ; on cooling in motion the sugar deposited on the crystals and the low grade sugars were eliminated. It is easy to see how this scheme can be developed from the theory given in this chapter. A second early proposal was that of Bock. In this scheme a strike boiled from straight syrup and separated into crystals and molasses only as regards two-thirds of its weight. The resulting molasses were boiled string-proof and struck on to the remaining third, the whole being then cooled in motion. It was expected that exhausted molasses would result. It is easy to see that no fixed proportions for the division of the original strike can be laid down, and that this must depend on the initial purity. In 1890, Steffen introduced the systematic return of molasses made with due regard to purity, and this system is the basis of the present methods of working.

All these schemes had their inception in the beet sugar industry, and it was not till a little before 1900 that attention began to be paid to them in the cane sugar industry, where the pioneer work was done in Java. At first crystallization-in-motion was applied to grained products. A grained massecuite was discharged from the pan into a receiver and cooled for several hours in motion, with the result that the sugar in supersaturated solution deposited on the crystals, whereas if cooled at rest this sugar would separate out as very fine individual crystals, which would not be capable of immediate recovery. This scheme, while giving an enhanced recovery of first product and eliminating one or more stages in the system of repeated boilings, could never avoid the necessity for boiling low-grade products with the presence of the accompanying low-grade sugars, the disposal and marketing of which is so difficult. The next step, which also originated in Java, was the attempt to obtain all the sugar in one operation, and was known as the " First sugar and molasses process." To do this it would be necessary to reduce the purity of the massecuite *en masse* to at least 65° purity without any previous separation of crystals. Accordingly, the syrup massecuite was boiled very thick and was then mixed in the pan with exhausted molasses until the predetermined purity of the strike was obtained. After cooling in motion, if everything had gone well, first sugar and exhausted molasses resulted, a part of which were removed from process, and a part retained for subsequent operations. It was, however, very hard to obtain marketable sugar from these strikes, and eventually the process was abandoned. After much experimentation, however, schemes have since been developed whereby the low products are entirely suppressed, and the juice is separated into a marketable sugar and waste molasses within 96 hours of its extraction from the cane. These processes are described below. Accumulated experience has shown that a massecuite of 55 to 60 polarization gravity purity when boiled to the proper water content and cooled in motion for about 60 hours can be separated into a medium grade sugar and waste molasses. By washing, the crystals can be made of 96 test, but in practice no attempt is made to thus treat them.

The best method of obtaining them as marketable sugar is that devised by Spencer at Tinguaro, in Cuba. In this scheme the crystals are dropped wet from the centrifugals, mingled with molasses from a high-grade strike, and pumped to the tanks wherein is the high-grade massecuite with which they are cured, and with the sugar from which they appear as marketable product. Alternatively the sugar may be used as seed grain or be remelted, either of which schemes is inferior to the one described above. In actual practice one of two routines is followed, known as a two or a three-massecuite process.

Two-Massecuite Process.—The polarization gravity purities selected are 75 for the first product and 55–60 for the second. On commencing operations, a strike is boiled from syrup alone and separated at once into crystals and molasses. The latter are taken back into the pan with syrup in such quantity as to give a mixed strike of 75 purity. From this with efficient boiling molasses of 45 purity will result. From now on every strike of syrup massecuite is reduced to this test by the addition of the circulating 45 test molasses. As the routine continues the 45 test molasses increases in quantity, and when enough has accumulated a strike of 55–60 test is boiled. This is discharged into crystallizers and cooled in motion for about 60 hours, when the temperature should have fallen to about 100° F. On drying this material it should separate into a sugar and exhausted molasses of 30 polarization gravity purity or of 40 gravity purity. The molasses are removed from the process and the sugar treated as indicated above.

Three-Massecuite Process.—This scheme is similar to the above except that the desaccharification is effected in three stages, the purities selected being 80, 70 and 55–60. Evidently with initial purities below 80 the two-massecuite scheme is obligatory, and it is to be preferred until the syrup purity rises to 83–84, when the three-stage scheme should be worked, since with higher purities it affords less material to be handled. It is at a disadvantage, however, in requiring a more complicated system of piping, tanks, and centrifugals.

Operators differ in the ways adopted for boiling the low-grade strikes. Generally these are boiled on a footing or *pied-de-cuite* of the 75 or 70 test massecuite. Otherwise they may be boiled on a charge of syrup. The first method is advantageous in that the resulting crystals are of the same size as those from the high-grade strikes, and the massecuite may be dried with the same centrifugal screen as used for these.

As the molasses are in continual circulation in these schemes, they have a tendency to finally become viscous. The stock in process should then be liquidated and the routine begun again.

Calculation of the Quantity of Massecuite produced.—In this section all calculations are referred to unit weight of gravity solids present in the original syrup. The purities referred to are gravity polarization purities. The essential equations required are :—

1. If p_s be the purity of the syrup, p_m be the purity of the molasses, what are the proportions to give a mixed strike of P purity ?

Let the strike contain unit weight of gravity solids, and let x be the gravity solids of p_s purity.

Then $p_s x + (1 - x) p_m = P$.

For example, if $p_s = 80$, $p_m = 45$, and $P = 75$, x is found to be 0·857 or 85·7 per cent. of the solids in the strike are derived from the syrup, and for every one part of solids in the syrup that will be produced there will be $1 \div 0{\cdot}857$ or 1·167 part solids in the massecuite.

2. If s be the purity of the raw sugar produced, j be the purity of the syrup, and m be the purity of the low grade massecuite, the sugar removed from process to obtain the low-grade massecuite is given by the expression $\frac{s(j-m)}{j(s-m)}$.*

Then it follows that for every one part of solids in the syrup the low grade massecuite contains $1 - \frac{s(j-m)}{j(s-m)} \times \frac{j}{m}$ parts of gravity solids.

This formula reduces to the very simple form $\frac{s-j}{j-m}$; for example, if s is 97, j is 80, and m is 55, the value of the expression is 0·405, or for every ton of gravity solids in the syrup there is 0·405 ton of gravity solids in the low-grade massecuite of 55° purity.

Now consider the two-massecuite process described above. In the first place all the syrup is reduced to 75 purity by the addition of the circulating

---

* See Chapter XXVII.

45 purity molasses. A portion of this 75 purity massecuite is left in the pan as a footing for the 55 purity low-grade massecuite. The proportions of 75 purity massecuite and 45 purity molasses to give a 55 purity massecuite can be obtained as in equation (1) above, remembering always that the quantities found refer to the actual quantities of gravity solids in the materials. With the purities selected as a base, 0·333 of the strike will consist of the footing of 75 purity massecuite.

Since, moreover, for each purity in the syrup it is known how much low-grade massecuite is produced, the quantity of footing required is also known.

For the case of 80 purity, it has already been computed that 1·167 parts of 75 purity massecuite are produced, and 0·405 part of 55 purity massecuite. This last consists of 33·3 per cent. of 75 purity massecuite, or 0·333 × 0·405 = 0·135 part of the 75 purity massecuite remains in the pan, and is not dried as high-grade massecuite. The quantity of 75 purity massecuite to be handled is then 1·167 − 0·135 = 1·032 part per part of gravity solids in the syrup.

Further, the sugar produced from the low-purity massecuite is re-dried along with the high purity massecuite, so that as regards the high-grade centrifugals allowance must be made for this. Taking this as 40 per cent. of the massecuite in the selected case, there will be produced 0·405 × 0·40 = 0·162, so that the total quantity of massecuite dried in the high-grade centrifugals is 1·032 + 0·162 = 1·195 part.

In the annexed tables are given the results of similar calculations for purities 75 to 90, and for the three-massecuite system for purities 80 to 90.

QUANTITY OF MASSECUITE PRODUCED IN A TWO-MASSECUITE PROCESS.

1	2	3	4
75	1·000	1·035	0·524
76	1·033	1·066	0·500
77	1·066	1·099	0·477
78	1·100	1·131	0·453
79	1·133	1·162	0·429
80	1·166	1·194	0·405
81	1·200	1·226	0·382
82	1·233	1·257	0·358
83	1·266	1·290	0·334
84	1·300	1·321	0·310
85	1·333	1·352	0·286
86	1·366	1·385	0·262
87	1·400	1·417	0·239
88	1·433	1·448	0·215
89	1·467	1·480	0·191
90	1·500	1·572	0·167

QUANTITY OF MASSECUITE PRODUCED IN A THREE-MASSECUITE PROCESS.

1	2	3	4	5	6
80	1·000	0·630	0·405	0·542	0·428
81	1·033	0·592	0·382	0·791	0·401
82	1·067	0·555	0·358	0·840	0·376
83	1·100	0·518	0·334	0·889	0·351
84	1·133	0·481	0·310	0·936	0·326
85	1·167	0·444	0·286	0·985	0·301
86	1·200	0·407	0·262	1·034	0·276
87	1·233	0·370	0·239	1·082	0·251
88	1·267	0·333	0·215	1·131	0·226
89	1·300	0·296	0·191	1·179	0·201
90	1·333	0·259	0·167	1·227	0·176

In the case of the two-massecuite system, column 1 gives the syrup purity, column 2 the quantity of 75 purity massecuite boiled in the pans, column 3 the quantity of the same material delivered to the centrifugals, including the 40 per cent. of wet sugar derived from the 55 purity massecuite, and column 4 the quantity of 55 purity massecuite, all expressed as dry matter per 1 part of gravity solids in the juice.

The basis of computation of the three-massecuite system is as follows. The massecuite is reduced to 80 purity by the addition of 50 purity molasses; a footing of 80 purity massecuite is left in the pan and reduced to 70 purity also by the addition of 50 purity molasses. The 70 purity massecuite on drying affords 40 purity molasses, which is used to reduce a footing of 70 purity massecuite to 55 purity: the 40 per cent. of wet sugar recovered from this massecuite is considered as returned to the 80 purity strike. Column 1 gives the purities of the syrup, columns 2 and 3 and 4 the quantity of 80, 70 and 55 purity massecuite as boiled in the pan; column 5 gives the quantity of 80 purity massecuite delivered to the centrifugals, including that returned as wet sugar from the 55 purity strikes; and column 6 gives the quantity of 70 purity massecuite delivered to the centrifugals. The quantity of 55 purity massecuite made and dried in the centrifugals is the same as in the two-massecuite process.

Inspection of these tables shows how very great is the variation in material to be handled as affected not only by the gravity solids in the juice, but also by the purity. In the design of a sugar factory allowance must be made for the most adverse circumstances. Decrease in purity implies more crystallizer capacity, but fortunately low purity is usually correlated with low gravity solids. On the other hand, high purity and high gravity solids generally occur together, so that an excessive capacity at stations affected by these causes is necessary.

Computation of Pan Capacity.—Generally pan capacity is designed on a basis of heating surface and quantity of water to be evaporated, some flat rate of evaporation per sq. ft. and per hour being accepted. This basis does not appeal to the writer, since a pan, as shown in another section, operates at a very variable rate. The method he uses is based on a knowledge of what pans actually do under working conditions, a method really not different from the process indicated as the usual way, since the heat transmission coefficients there used are based also on observation. As an example, suppose a design is required for a house to work up 100 tons of juice at 15 per cent. gravity solids and 80 purity. Referring to the table on page 395 for a two-massecuite process there will be produced in the pans $1{\cdot}167 - \frac{0{\cdot}405}{3} = 1{\cdot}032$ part of 75 purity massecuite, and 0·405 part of 55 purity massecuite per part of gravity solids in the juice; in all 1·437 part. For the selected quantity this in 24 hours will amount to $1{\cdot}437 \times 100 \times 24 \times 0{\cdot}15 = 517$ tons; allowing 23·5 cu. ft. at "93° Brix" per ton of gravity solids there will be 12,149 cu. ft. This quantity will have to be discharged by the pan in 24 hours. Let the design call for four pans of equal size; then each pan will discharge 3,037 cu. ft. per day of 24 hours.

The time required for the cycle of a pan strike varies with the steam pressure, the heating surface in the pan, and a number of other causes, amongst which are some obscure factors connected with the nature of the syrup. Also a certain minimum time must be allowed, since the rate at which crystals form is not instantaneous, but lags behind the rate at which water is removed. Actually it would not be advisable to count on more than four full strikes per day of twenty-four hours. Each pan would then have a working capacity of 759 cu. ft., and the total capacity would be 3,037 cu. ft. If, further, the 100 tons of juice be derived from 100 tons of cane, this computation would give 30·4 cu. ft. per ton-cane-hour. In the example quoted the gravity solids accepted were low, and as a general rule 40 cu. ft. per ton-cane-hour represents modern practice.

The heating surface in the pans depends on the pressure of the steam which is to be used. Coil pans of the type described on page 398 are usually worked with live steam, and as usually constructed have 1 sq. ft. heating surface to 1 cu. ft. of working capacity. If, then, pans of this type are to be installed there would also be required 40 sq. ft. heating surface per ton-cane-hour.

On the other hand, if a system of steam utilization be decided which employs low-pressure steam in the pans, calandria pans or pans with short coils and distributing boxes will be used. These are made with as much as two sq. ft. heating surface per cu. ft. of capacity, and may be taken as operating equally as fast as a coil pan used with live steam. With such a system the heating surface would reach 80 sq. ft. per ton-cane-hour, and with a combination of the systems would lie anywhere between these limits.

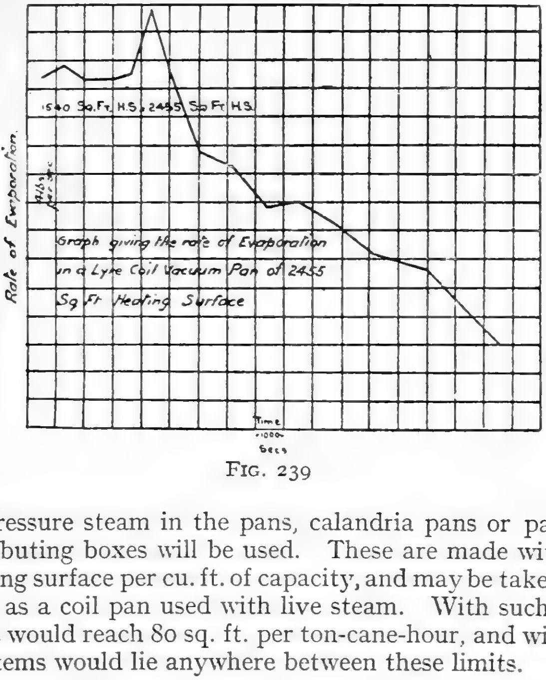

FIG. 239

Rate of Evaporation.—The rate of evaporation in a vacuum pan is very variable. In a lyre coil pan tested by the writer there were in all 2,555 sq. ft. heating surface, of which 1,570 sq. ft. were in the body and 855 sq. ft. in the saucer. The capacity of the pan was 2,700 cu. ft. The steam used was 40 lbs. gauge and the syrup boiled was of 60° Brix. On commencing operations a charge of 640 cu. ft. was admitted, and steam was turned on to 1,540 sq. ft. Grain appeared in 35 minutes ; all the heating surface was in operation in 59 minutes ; the last charge was taken in 219 minutes after starting, and the strike was completed in 264 minutes. The rate of evaporation was determined by collecting the water discharged from the coils in tanks of 63·5 cu. ft. capacity. The times taken to fill a tank were : 810, 780, 810, 810, 795, 695, 840, 1,020, 1,080, 1,295, 1,245, 1,395, 1,635, 1,780 seconds; the last 31 cu. ft. of discharge took 1,500 seconds. These results are shown as a graph in *Fig.* 239. Evidently the rate of evaporation per sq. ft. is at a maximum when graining, and the greatest evaporation occurs when all the heating surface is first put into operation. The rate is so variable that it is useless to speak of any mean rate of transmission of heat in a pan.

This irregularity in the rate of evaporation may give trouble in the steam generating department unless there are installed a number of pans sufficient to equalize the load. The writer's opinion is that there should not be less than four pans in order to obtain an approximately equal rate of steam consumption at this station.

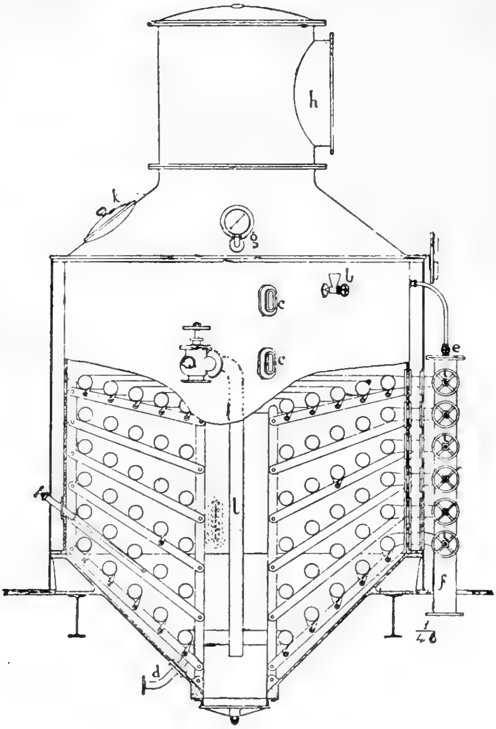

FIG. 240

Vacuum Pans. *Standard Coil Pan.*—The original pan of Howard is best described as constructed of the caps of two spheres joined about their bases. A double bottom, to which steam was admitted, was formed in the lower cap, and this formed the only heating surface. The apparatus was very shallow, and corresponded to the popular meaning of the word "pan." The coil was introduced at an early date, the first patent drawing to show a plurality of coils with individual steam inlet and condensed water outlets being that of Greenwood (878 of 1853.)

A section through the modern "standard" coil pan appears in *Fig.* 240. The heating surface is made up of helices as developed round an inverted cone of flat angle. The coils are from three to five inches in diameter, depending on the size of the pan. Each coil has its own steam entry, live or exhaust being used at will; the connection for the latter is not shown in the sketch. To permit of circulation, ample clearance is allowed between the coils, and a circulating well is provided in the centre of the pan, down which passes the feed pipe introducing the material to the lower portion of the pan. Pans of the design shown have usually one sq. ft. heating surface for each cu. ft. of capacity.

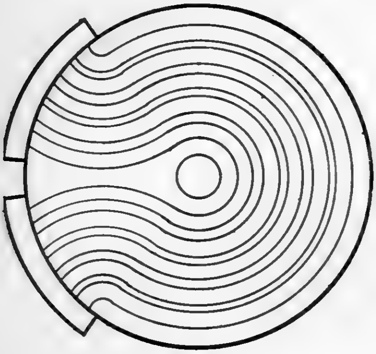
Fig 241

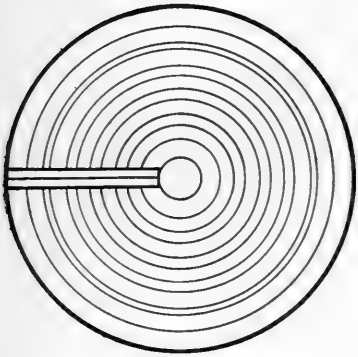
Fig 242

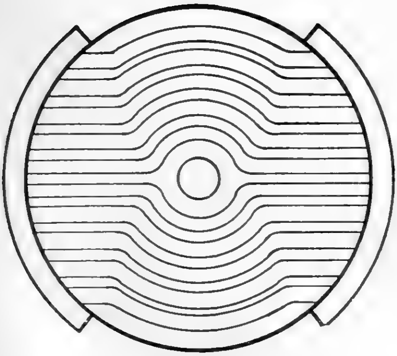
Fig 243

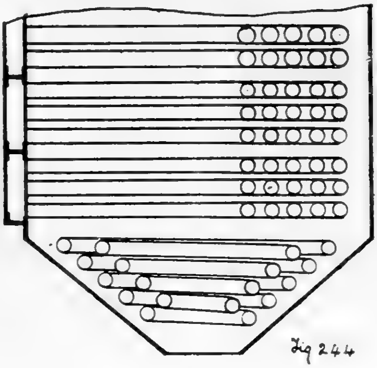
Fig 244

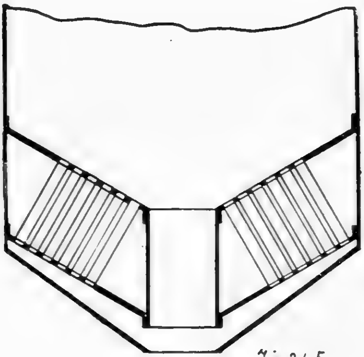
Fig 245

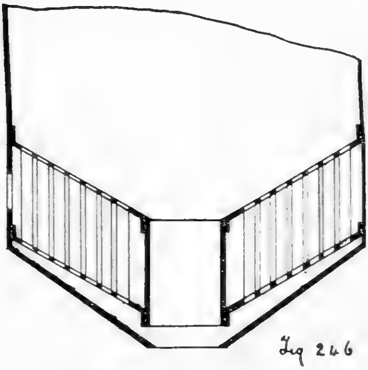
Fig 246

Short Coil Pans.—A disadvantage of the type of pan described above is the great length necessary for the coils as the size of the pan increases. This results in a very inefficient heating surface, and to avoid this difficulty various types of coil pans which abandon the helix are made. Three of these arrangements of coils are shown in plan in *Figs.* 241 to 243. In *Fig.* 241 is indicated the lyre coil device. Vickess' patent (15773 of 1892), one of the earliest types, is seen in *Fig.* 242, that of Lorenz appearing in *Fig.* 243.

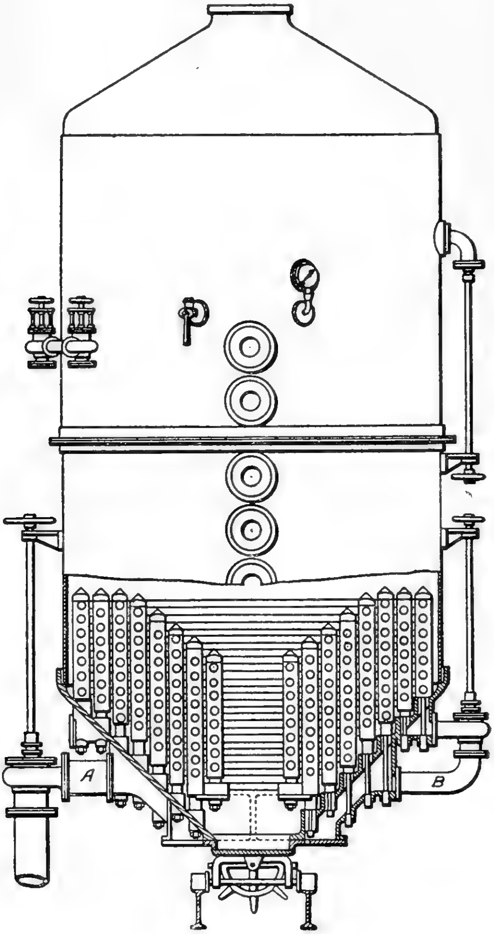

FIG. 247

In all these combinations the coils are collected at one extremity in a steam chest, and at the other is a collector box for the condensed water, and in all arrangements the maximum travel of the steam is very much less than that in the standard coil pan.

In all these devices it is customary to arrange the horizontal coils in nests of three or four, which pass into a common collector box and amongst themselves for a heating element. This scheme is indicated in vertical section as for the lyre pan in *Fig.* 244.

The Greiner short coil pan is shown in *Fig.* 247. The heating surface consists of a number of concentric elements supported on cast-iron standards. Steam is admitted and condensed water removed at the bottom of each element. The valve *A* controls the admission of steam to the smaller elements, which are used in forming grain, and that at *B* to the larger elements used, when the pan is operating at full capacity.

Pans similar to those described above have usually two sq. ft. heating surface to one of net capacity.

Tubular Pans.—The tubular or calandria pan has its heating surface made up of tubes secured at either end in tube plates. This type of pan, which is claimed as new in Walker's patent (14141, 1852), is indicated in *Fig.* 248, where a coil in the saucer is also shown. The coil is usually operated with live steam, exhaust steam being used in the calandria, the tubes in which are generally not less than four inches in diameter. Other arrangements of tubular calandrias are shown diagrammatically in *Figs.* 245 and 246, the object of these arrangements being to obtain a sloping surface on which the massecuite may not lodge. The inclined calandria is claimed in Freytag's patent (8064 of 1888). Pans of this type, which afford two sq. ft. heating surface to one cu. ft. net capacity, were originally introduced into Cuba as a means of using up surplus exhaust steam from a multiplicity of small pumps and engines. At the present day they are again being largely installed in connection with the schemes described in Chapter XVIII for the economic utilization of steam, and for this purpose the short coil pans are equally applicable.

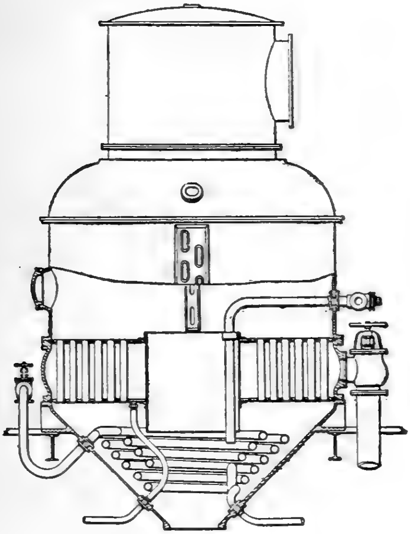

FIG 248

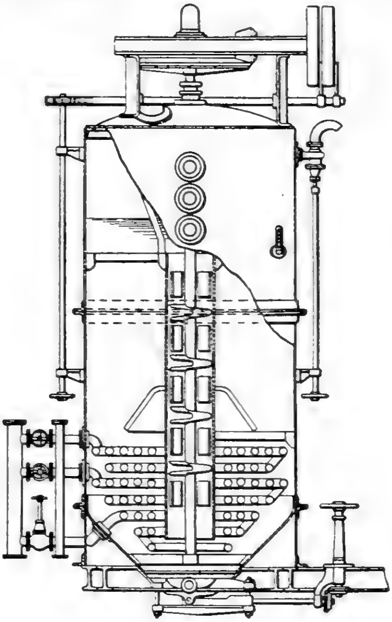

FIG. 249

Pans are also built with horizontal tubes similar in shape and arrangement of heating surface to the Welner-Jelinek evaporator (*q.v.*), except that the bottom is made sloping to allow of the discharge of the contents. They appear but rarely, if at all, in the cane sugar industry.

Mechanical Agitation.—A patent (13286, 1850), taken out by Shears as agent, claims the use of a vertical screw in a vacuum pan. Many years later this same device appears in the Freytag pan, with a tubular heating surface, and in the Grosse coil pan, *Fig.* 249, and in the Reboux pan, *Fig.* 250. These pans, used in the beet industry for the slow methodical boiling of low-grade material, have not up to the present entered into use in the cane industry.

Certain patents have for their object agitation by means of moving heating surfaces. Thus McNeil's patent (8814 of 1899) employs a device similar to that of Bour's evaporator (*q.v.*), while Czapiowski (15031 of 1902) employs a rotating coil similar to those once used in the Wetzel pan (*q.v.*). These devices have never come into use.

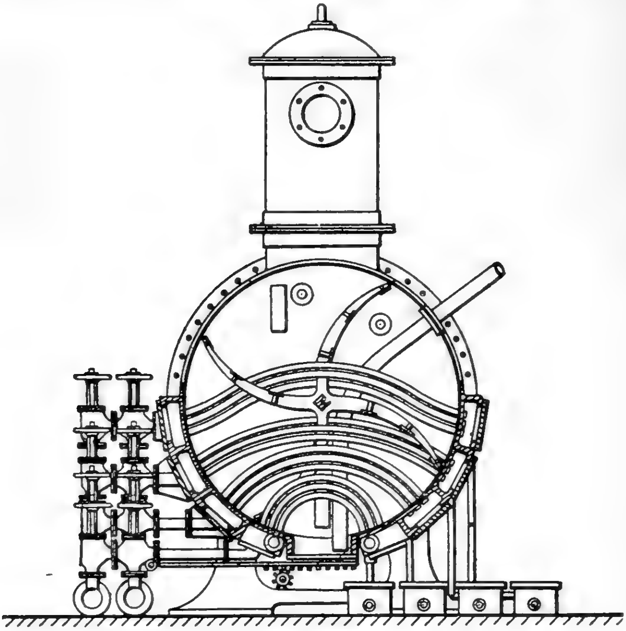

FIG. 250

Technique of Crystallization-in-Motion.—In a previous section it was stated that low-grade products when dropped from the pan should have a coefficient of supersaturation of 1·5 to 1·6. The object of operating with so high a coefficient is to push the work in the pan to the limit and to obtain there as great a crystallization as is possible. On cooling such a massecuite owing to the high viscosity crystallization will be very slow, and eventually a supersaturated mother liquor may remain, when it is time to dry the strike. There may be also much fine grain present, and the strike may dry badly and require much water to remove the viscous mother liquor. The supersaturation of such a material should be systematically reduced in the crystallizers by the addition of water until a saturated molasses results. Until the saturation point is reached the water added does not dissolve sugar or increase the purity of the molasses, but performs solely the function of reducing the supersaturation. At the same time crystallization proceeds freely, and when all the operations have been properly performed a free-spinning material from which is obtained exhausted molasses results. The calculation of the quantity of water to add is best indicated by an example. The table given early in this chapter indicates that a strike of 60·5 polarization gravity purity and Brix 93·8° will give exhausted molasses. Let such a strike on leaving the pan be of 97·2° Brix. Let x be the quantity of water required to be added to reduce the material to a Brix of 93·8°. Then $0{\cdot}972 = (1 + x)\ 0{\cdot}938$, whence $x = 0{\cdot}036$. That is to say, per 100 lbs. of massecuite there is to be added 3·6 lbs. of water or roughly 334 gallons per 1,000 cu. ft. This quantity of water should be added gradually, and in such a way as to ensure an equal distribution. The rational location for introduction is at the bottom of the container, as the water will have a tendency to rise through the denser massecuite. Failing this, a perforated pipe may be arranged running the whole length of the upper surface of the crystallizer. The water when introduced should be at the same temperature as the massecuite.

It is not to be understood that the table under which this calculation is made is generally applicable without change; rather every factory should determine for its own use what are the most appropriate concentrations at which to strike and to dry these low-grade massecuites. On the other hand the general law under which the table in question was constructed remains valid and is applicable to any factory.

The rate of cooling is of importance, since the rate at which sugar can separate from solution on to the surface of crystals is limited. Hence, if the rate of cooling be too great, a supersaturated solution is again formed. When crystallizers were first used, many were installed with jackets, into which either steam or water could be admitted. For use in the tropics this has been found unnecessary, and the natural rate of cooling as determined by the outside temperature seems to be what is required for the deposit of the sugar. Similarly, no advantage is gained if the rate of revolution is increased beyond that necessary to give the maximum rate of deposit of sugar from solution. The rate of revolution that experience has found desirable is about one revolution in $1\frac{3}{4}$ minutes.

The size of crystal is also of importance since the deposit of sugar is essentially a contact process between solid and solid in solution. If n be the number of crystals in unit volume the surface area of the crystals is proportional to $\sqrt[3]{n}$, and consequently the rate of desaccharification of the mother liquor will vary as the cube root of the number of crystals. Conversely, if d be the diameter of the crystals, the total surface area is inversely proportional to d. It follows then that as regards the rate of desaccharification a fine-grained massecuite is superior to one of larger grain. Larger crystals will then imply a longer period of cooling and more crystallizer volume unless compensated for by an increase in the rate of revolution, whereby the surface of contact between crystal and mother liquor is increased. This increase in speed should be in proportion to the diameter of the crystal or inversely in proportion to the cube root of the number of crystals.

In operating crystallizers it is of importance to see that the blades of the stirrers are submerged, as otherwise in their movement they will force air into the magma, and so will form an emulsion with the molasses. This emulsion will be so light that it will float on the wall of sugar in the centrifugals. Similarly, when a crystallizer is being emptied the stirring gear should be stopped.

The temperature at which low grades should be dried is about 105° to 110° F. If allowed to cool below this limit the molasses becomes so viscous that any gain in sugar deposited is counterbalanced by the increased quantity of water required to wash the sugar in the basket.

Crystallizing Tanks.—The receptacles in which the massecuites are received in order to be cooled in motion are either cylindrical or U-shaped. More capacity in a given floor area is obtained with the latter. A shaft located along the longitudinal axis of the vessel carries the stirring gear, which usually takes the form of a double helix, as seen in *Fig.* 251. Motion is usually transmitted to the shaft by a worm and wheel drive. The power absorbed is about 1 h.p. per 1,000 cu. ft. of massecuite. The tanks are made plain or jacketed. In the latter case water or steam may be admitted to the jacket so as to control the rate of cooling. In cane sugar houses this control is very uncommon, and excellent results may be obtained with an uncontrolled rate of cooling.

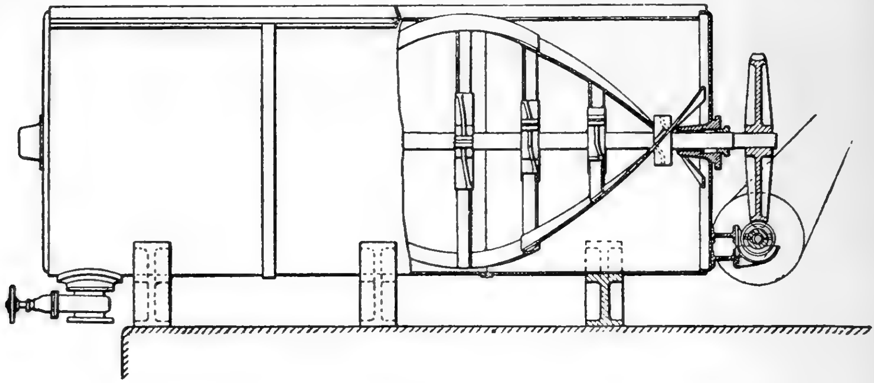

FIG. 251

In the beet sugar industry rapid cooling tanks are sometimes installed by the use of which the massecuite is cooled and ready to dry in nine hours. Two forms due to Ragout and Tourneur and to Huch are shown in *Figs.* 252 and 253. The cooling surface of the former is a rotating helix, and in the latter a system of stationary tubes. In both patterns hot or cold water circulates through the tube system. The Huch pattern is also made as a vacuum crystallizer, permitting of the removal of water during cooling. Neither of these types has come into use in the cane sugar industry and possibly the viscosity of low cane products might prevent the deposit of sugar keeping pace with the fall in temperature.

Calculation of Crystallizer Capacity.—The calculations given on page 395 show that the capacity depends on the gravity solids, on the purity as variables, and on the time considered necessary for cooling as a constant.

Referred to four days' capacity with massecuite of 55 purity and of 93° Brix occupying 23·5 cu. ft. per ton, and with 100 tons of juice per ton of cane, the following general formula may be obtained: Cubic feet per ton-cane-hour $= 2{,}200 \times g.s.$ per cent. $\{0{\cdot}00524 - 0{\cdot}00024\,(p - 75)\}$ where *g.s.* is

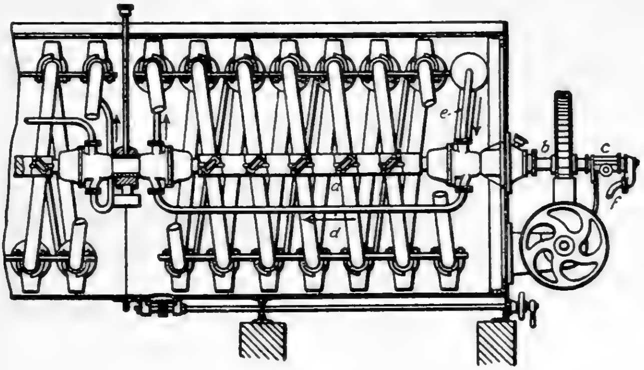

FIG. 252

the gravity solids in the juice and p is the polarization gravity purity. If, for example, there are 100 tons of cane giving the same quantity of juice of 15 per cent. gravity solids and of 80 purity, there will be required 13,332 cu. ft. or 133 cu. ft. per ton-cane-hour. The design must allow, however,

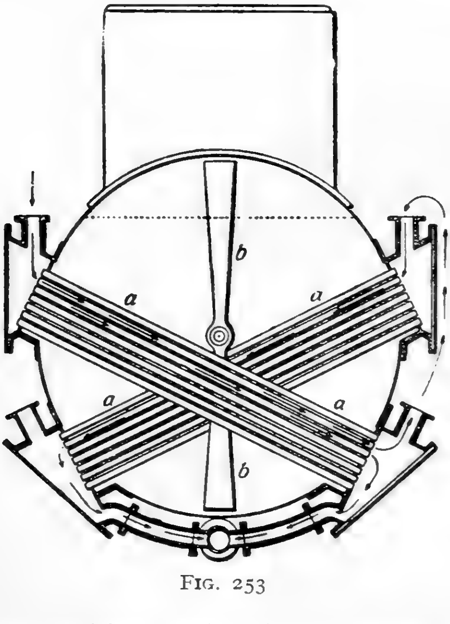

FIG. 253

for the most adverse conditions, such as high Brix and low purity, as may result from burnt cane, and generally, in the absence of a detailed knowledge of local conditions, it is not advisable to install less than 150 cu. ft. per ton-cane-hour. Each crystallizer should hold one full pan strike, and if four pans be installed with a combined capacity of 40 cu. ft. per ton-cane-hour there would then be 15 crystallizers each holding one pan strike. If, as is often the case, the crystallizers are laid out in a double row, 16 would be the number installed.

Boiling Routines in White Sugar Manufacture.—The same general principles apply to boiling in white sugar manufacture as in that of raw, with respect to which this chapter has been written. In details, however, there are several important differences. In the first place, owing to the necessity of washing the sugars, there results a much greater quantity of molasses to be handled, and this material suffers an increase in purity over and above that of the mother liquor. Secondly, processes employing low sugars as seed grain are impossible, since a discoloured nucleus in the crystal would result; the use of a *pied-de-cuite* or of high grade sugar as seed is, however, permissible and useful when a large crystal sugar is demanded. A third point of difference lies in the treatment of the low grade sugars; evidently these sugars cannot be mixed with the white sugars, and they have to be marketed as low grades or else remelted in the juice and passed again through the process of defecation. This procedure is, however, not altogether to be recommended, as dark-coloured bodies are re-introduced into the juice. Finally, it is to be remembered that brightness and transparency in the material entering the pans is of perhaps more importance than is colour.

A two-massecuite process is generally impossible in the manufacture of white sugar, and three boilings will nearly always be necessary. The first boiling is made from syrup alone, with or without the return of purging syrup (*vide* page 426), or of the rich molasses resulting from the washing of the sugar in the centrifugals, provided these are separated from the actual mother liquor. The second boiling is made from these last-mentioned materials, sometimes on a footing of first massecuite and sometimes grained separately. This massecuite affords a white soft-grained moist sugar very popular in the Orient; it may also be mixed with first sugar, only one quality of white in this case being marketed. The molasses resulting from this second boiling should be of purity sufficiently low to afford a low grade massecuite to be separated into a low grade sugar and waste molasses.

REFERENCES IN CHAPTER XIX.

1. U.K. patent 5518 of 1900.
2. *Sucrèrie Belge*, Nov., 1898.

CHAPTER XX

The Separation of the Crystals

The concentrated syrup discharged from the pan consists of a magma of crystals and molasses. The molasses are separated from the crystals by causing the magma to be rotated at a great velocity in perforated baskets. In this way the whole mass is forced against the perforated wall, the molasses passing through the wall of crystals and the perforations in the basket. The machines employed are known as centrifugals or hydro-extractors. From one point of view this process may be regarded as one of filtration under great pressure.

Receptacles for and Transport of Massecuite.—In modern factories the high-grade massecuites, which are dried without preliminary cooling, are discharged into large receptacles capable of holding a full strike of the pan. These tanks, which are usually cylindrical or U-shaped, and provided with stirring gear, may be placed directly over the battery of centrifugals or underneath the pans. In this case the centrifugals are provided with a smaller receiver, into which the massecuite is fed. This smaller receiver also contains a stirring gear usually operated by a sun and planet motion. From this tank individual charging spouts lead to each machine.

The most convenient system of handling is one operated by gravity. In districts, however, where cyclones or earthquakes occur a tall building is dangerous; in this case it is usual to place the receptacles on the ground floor and to elevate the massecuite to the centrifugal supply tank by means of magma pumps, chain pumps, or preferably by compressed air.

An earlier system included the use of tanks running on tramways, from which the massecuite was shovelled to the centrifugal supply tank. In a second scheme once widely used the massecuite was discharged into cans holding about 500 lbs., which were transported on trucks to a hydraulic elevator, their contents being dumped into the centrifugal supply tank.

Early Methods of Separation.—The original method of separating the crystals from the molasses was drainage, and to this day this method is still used in a few districts, the massecuite being packed into hogsheads with perforated bottoms.

Pressure on the massecuite in cloth bags was patented by Wakefield (2506, 1801), and drainage into a vacuum by Vaughan (3261, 1809). Hague (4048, 1816; 5725, 1828) also patented vacuum drainage, adding thereto the use of compressed air on the surface of the massecuite; this process was extensively used in London refineries, and also in the raw sugar industry.

The removal of the adhering molasses, and its substitution by a clairce of high-grade syrup, is seen in Constant's patent (3541, 1812), and is also claimed in Howard's classic patent (3754, 1813). This method passed into, and still remains, a part of standard refinery practice in certain houses.

Development of the Centrifugal.—The earliest reference to the centrifugal as a mechanical power is contained in Penzoldt's French patent (8941, 1837), as applied to drying wool. Hardman's British patent (9998, 1843) claimed the application of centrifugal force as a new principle for removing liquids from solids and was developed as being especially applicable to the sugar industry. The machine illustrated by Hardman was a basket carried on a vertical shaft, overhead belt-driven, and rotating in rigid bearings. He stated that the revolutions should be 800–1,000 per minute, and called his machine a molasses " disperser." The patent also claimed the liquoring of the sugar in the machine with high-grade syrup.

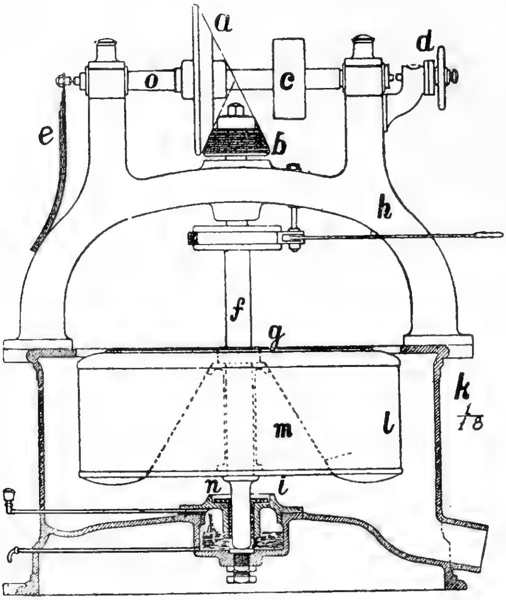

FIG. 254

Very shortly after this a second patent was taken out by Alliott (10070, 1844), with reference to the drying of textiles. The upper bearing of his machine was supported at the end of an arm of a crane-shaped frame, a feature which still remains in use in certain machines. Another application of centrifugal force is due to Seyrig (French patent 3947, 1848), in whose design the upper bearing of the spindle was carried in an inverted U-frame or arcade, supported on the curb or outer casing of the perforated basket. The machine was driven by friction cones or by buff wheels through belt gearing. This type of machine was extensively used, and some still remain in operation in cane sugar factories, especially in Brazil and Mauritius. A modernized form of this design appears in Fig. 254.

A patent granted to Brooman, as agent (12742, 1849), fixed another standard type of machine, namely, that supported on top of the vertical spindle, combined with under-drive, as indicated in a modern form in *Fig* 255. Rotch, as agent, in a patent (13023, 1850), introduced a hemispherical bearing, on which the bottom of the spindle rests, and also a form of roller bearing, on which the hemispherical bottom of the spindle rests and rotates. He attempted to restrain the oscillations of the machine by suspending a weight to the spindle. This patent contains the germs of various later successful types.

Instead of attempting to restrain the rotating basket in rigid bearings, all modern machines are so built as to be allowed to find their own centre of oscillation. This very important advance is due to Bessemer, who (patent 13202, 1850) described a machine suspended from a ball and socket joint free to find its own centre of gyration. The spindle of Bessemer's machine was extended below the bottom of the basket and carried a loose wheel surrounded by a fixed curb. The object of this arrangement was to restrain the amplitude of any oscillation which might arise from lack of balance in the load. Bessemer's patent also claimed the inverted type of free machine, with the basket balanced on a ball and socket joint and underdriven. In addition, he claimed the use of a rubber buffer between the bushing and spindle, for the purpose of avoiding vibration and allowing a certain freedom of movement.

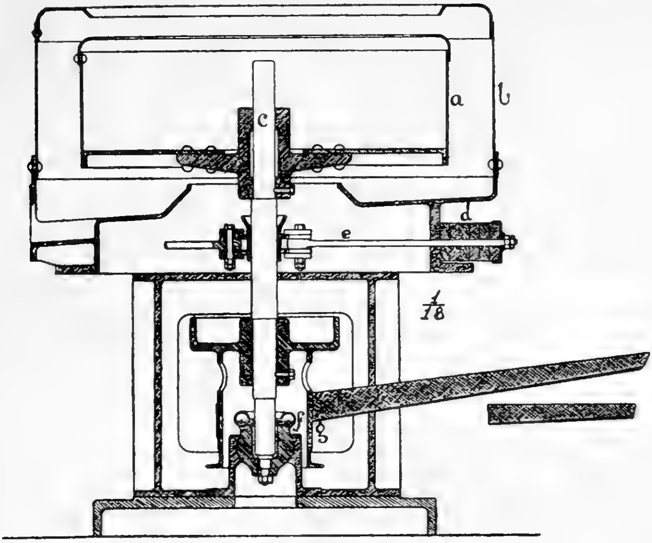

FIG. 255

In a patent (13416, 1850) granted to Nind, as agent, the whole machine is described as suspended by elastic rods, the lower end of the spindle rotating in bearings surrounded by rubber buffers.

The modern sugar centrifugal machine dates from Weston's patent (3041 of 1867; U.S. patent 63770, 1867), and was developed by him when engaged as an operating engineer in the Hawaiian Islands. His machine, as shown in his patent, and from which the very latest machines only differ in detail, combined freedom of oscillation with a solid stationary suspended spindle supporting a hollow rotating spindle, to which is attached the perforated basket. His patent did not claim suspension, but only the special means of suspension,* and he is in no wise to be considered the inventor of

---

* A provisional patent issued to Johnson as agent (418 of 1852) mentions a hollow spindle, but gives no details.

the suspended machine, the credit for which is due to Bessemer, and to whose design the latest types of solid spindle machines tend to revert.

Fig. 256 which represents a belt-driven Weston centrifugal, independent

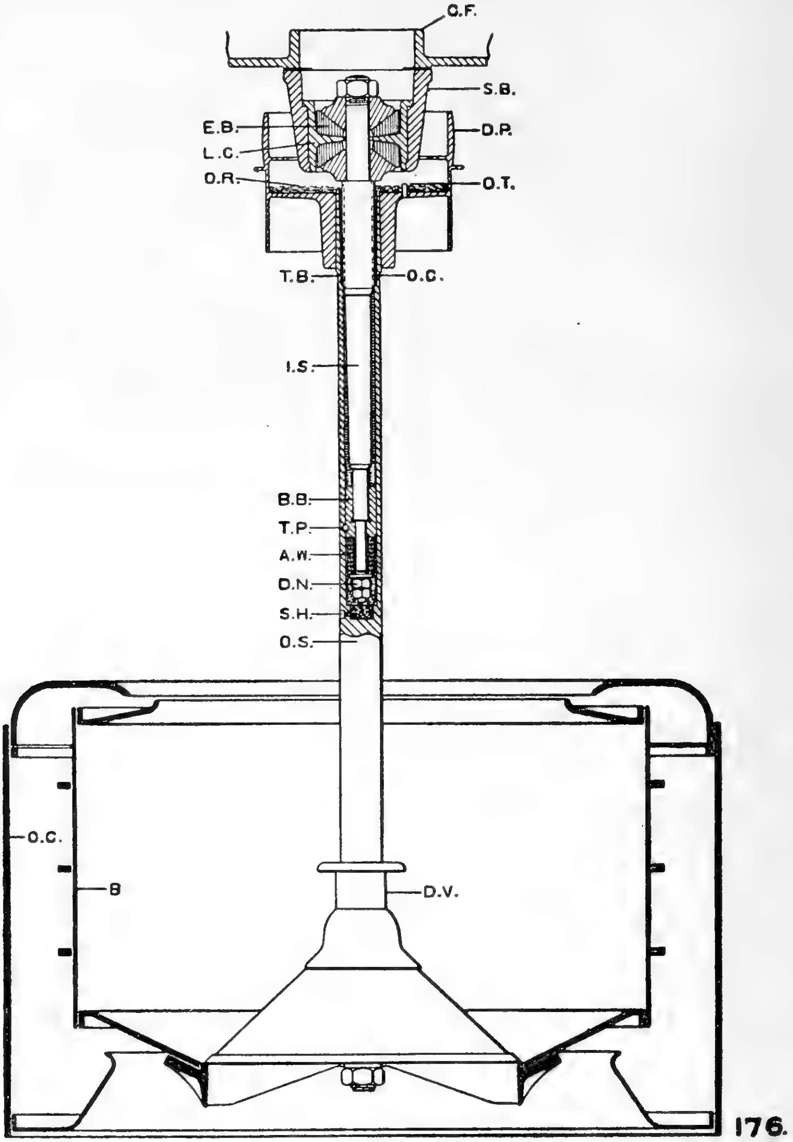

FIG. 256

of certain refinements of recent introduction, referred to later. The machine is suspended from a girder, **C.F.**, by the socket **S.B.**, which contains an india-rubber or elastic bushing, **E.B.**, in which the solid stationary spindle **I.S.** is held. At the lower part of this spindle is placed a series of washers, **A.W.**, supported by the screw nut **D.N.** The outer hollow rotating spindle carries the driving pulley **D.P.** and the basket **B.**, and is supported by a shoulder on the washers. The outer casing or curb, which serves to collect the molasses, is shown at **O.C.**, the molasses flowing away by a spout. The central valve, **D.V.**, sliding on spindle, also forms a part of the patent claim.

In the Hepworth machine (patent 3375 of 1871; U.S. patent 82314, 1868) the whole machine was suspended from a ball and socket joint. The spindle which carried the basket was solid and rotated in fixed bearings, which were attached to the curb or outer casing, so that basket and curb always remained concentric. Oscillations of the rotating basket were hence transmitted to the suspended outer casing, and the whole machine was free to swing. The oscillations were restrained by attaching the outer casing to fixed pins by means of rubber bands. This particular type of machine has

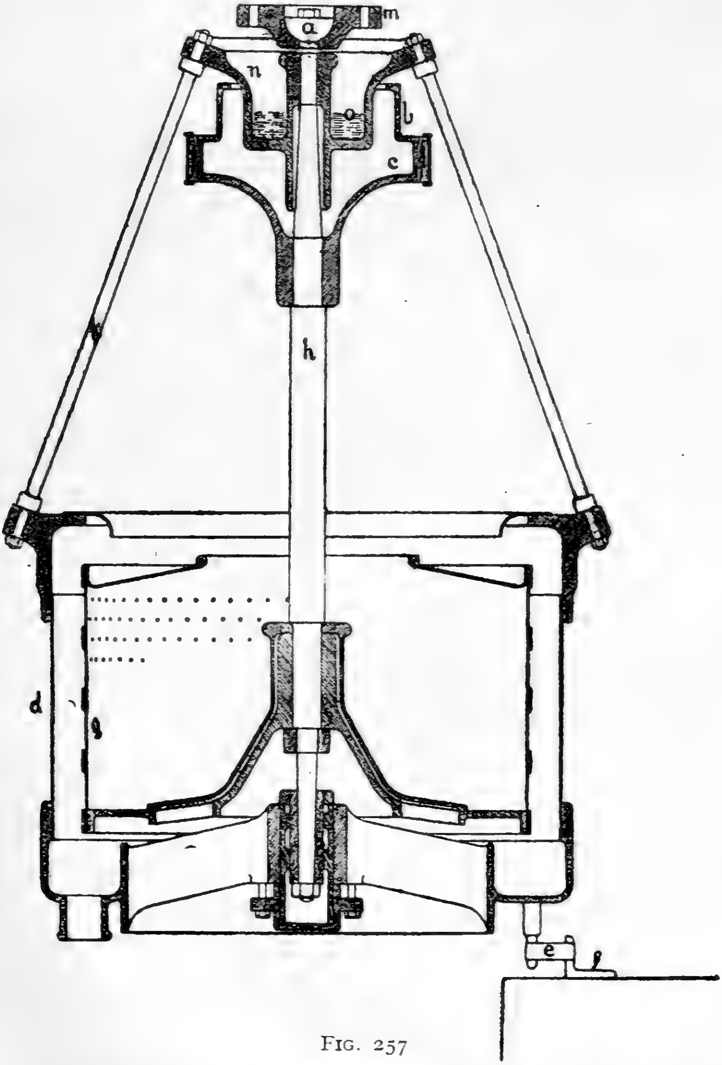

Fig. 257

not survived, though once in extended use. It is illustrated as formerly made in *Fig.* 257.

It is curious to note that the differences between Bessemer's patent (13202, 1850) and Nind's patent (13416, of 1850) are very closely paralleled by similar differences in those of Weston and Hepworth.

Two other types of machine may be mentioned. Lafferty's patent (235 of 1869) caused the solid spindle carrying the basket to pass through an intermediate hollow shaft, elastic material being interposed between the shaft and the spindle. The spindle was extended through and beneath the basket, terminating at its extremity in an elastic bearing. In Cottle's patent (1350 of 1872) the solid spindle carrying the basket terminated in a hemispherical piece resting on a counterpart bearing. This device was further developed in Tolhurst's patent (255 of 1878), who employed a spindle with a cone-shaped termination resting on a cone-shaped base, so that the machine was free to rock in all directions, the amplitude of the movement being restrained by rubber cushions. These types have been largely used in the past, and the last-named machine, though not employed in the sugar industry, finds an extended use in other trades.

The Centrifugal Basket and Screen.—The centrifugal basket consists of a vertical cylinder partly open at top and bottom, as indicated in *Fig.* 256. It is usually constructed of steel and is securely attached to the revolving spindle.

As found in the raw sugar industry, the sizes of the basket are 30-in. × 18-in., 36-in. × 18-in., 40-in. × 20-in., 40-in. × 24-in., 42-in. × 20-in., 42-in. × 24-in. and 48-in. × 24-in.; the thickness of the shell is usually $\frac{3}{16}$-in. to $\frac{1}{4}$-in. The shell is perforated to allow the molasses to pass, the perforations being usually $\frac{3}{4}$-in. to 1-in. pitch and about $\frac{3}{16}$-in. diameter. These dimensions, of course, vary among the different makers. To give additional strength, the shell is reinforced with circumferential hoops of steel; in a 42-in. machine there are usually eight of these hoops, one inch deep and one-quarter inch wide.

The bottom of the basket is usually made horizontal or sloping slightly downwards, with a central opening for the discharge of the dried sugar; when running this opening is closed by a valve.

The lip of the basket is horizontal or slightly sloping upwards; its duty is to prevent the massecuite from climbing upwards under the action of the centrifugal force. The width of the lip is about six inches and varies, of course, as among different makers. The contents or charge of the basket is determined by the volume defined by the shell, the lip, and a vertical dropped from the inner edge of the lip. It is the practice, however, to charge the basket while it is already in motion, so that during the process of charging molasses is already being removed, and thus the capacity or charge is increased.

The screen which serves to retain the crystals is made of perforated copper or brass sheet, or is woven. The perforations may be circular or elongated conical holes, as first proposed by Gwynne (patent 13577, 1851). The woven material is suitable for very fine sugars, and the perforated for coarse material. The perforations are usually about one-fortieth of an inch, and are spaced twenty to the inch. Between the wall of the basket and the screen is interposed a very coarse woven screen, with mesh at least one-quarter inch, upon which the screen rests. In its absence the perforated copper or brass sheet would be forced against the inner surface of the shell, sealing its perforations.

In the earlier machines the discharge of the sugar was effected by lifting it in scoops over the lip, and the discharge through the bottom of the basket appears for the first time in Weston's patent, though previously Gordon (2213, of 1867) had patented a machine in which the whole bottom was lowered. Considerable labour is expended in scraping the sugar from the wall of the basket, and to obviate this Sillem (898 of 1858), Green (1332 of 1859) and Merril (1178, 1867) all patented the use of scrapers which were held against the wall of sugar whilst the machine was still revolving. Although patented again by Weston (1937, 1883) as a "plough" in a very practical form, this system does not seem to have come into use till many years later.

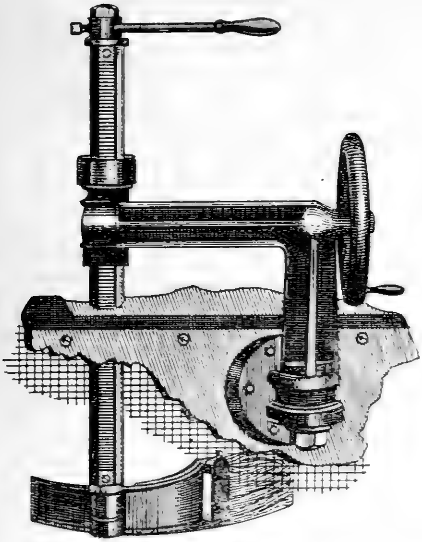

FIG. 258

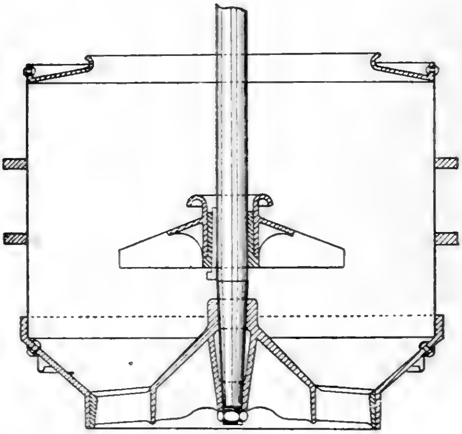

FIG. 259

The Roberts-Gibson discharger (patent 5675, 1910) is shown in *Fig.* 258. To avoid damaging the screen, these devices should be used with a renewable hard wood tip, as was also pointed out by Weston.

The self-discharging basket of Watson, Laidlaw & Co., Ltd., is shown in *Fig.* 259. This is contained in Laidlaw's patents (4498, 1894; 8766, 1895; 5750, 1902). In this machine the massecuite is fed on the cone whilst the basket is in motion, at a speed sufficient to project the material against the side. When the massecuite dries, the slope of the wall is insufficient to retain the sugar, even before the basket has come to rest.

The Centrifugal Spindle.—The spindle shown in *Fig.* 256, representing very closely the original Weston patent, remained a standard pattern for many years. Certain modifications are mentioned below. Laidlaw's patent (6081, 1891) introduced the double wedge-shaped buffers, shown also in *Fig.* 256, which serve to give a more uniformly distributed pressure in different positions of the basket. Later, the buffer assumes a conical form in MacFarlane's patent (10034, 1903), *Fig.* 260, and is so made as to afford access to the bearing without dismantling the machine.

Ball-bearings are claimed generally as applicable to centrifugals in Theissen's patent (15984, 1899), and they appear in MacFarlane's patent (19060 of 1902), and in that of Pott, Cassels, Williamson and Stuart (19069 of 1902), *Fig.* 261. In both these patents the usual inner solid stationary spindle is made hollow to accommodate a stem fixed at its lower end to the hollow rotating spindle which carries the basket. The step bearing is fitted between the upper ends of the stem and of the stationary spindle in an oil retaining casing.

The solid spindle with the compound ball-bearing appears in Pott and Williamson's patent (8806, 1903), *Fig.* 262, and in MacFarlane's patent (25097, 1903), *Fig.* 263. In the former the end thrust is taken up on the large balls, and the side pull on the journal bearing on the smaller balls: in the latter, the end thrust is taken up on the outer two rows of balls, and the side pull on the two inner rows. With the solid spindle the design reverts very closely to the original suspended centrifugal as designed by Bessemer.

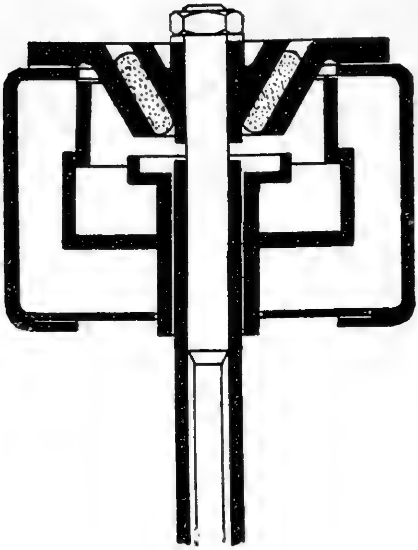

FIG. 260

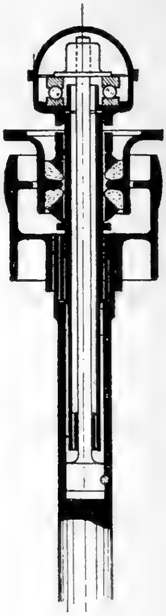

FIG. 261

A type of spindle employed by the American Tool and Machine Co. is shown in *Fig.* 264. It differs from the other designs in employing a ball and socket suspension and in continuing the inner stationary spindle throughout the length of the outer rotating element.

Cycle of Operations in a Centrifugal.—In drying sugar the cycle of operations is as follows:—Charging, accelerating, running at full speed, stopping, discharging. Often the charging and accelerating will take place simultaneously. The complete time of a cycle will depend on the design, especially on the power of the prime mover, and on the nature of the material being dried. In sugar-house work the nature of the material varies usually in terms of the "purity," but between material of the same purity much depends on the skill of the sugar boiler, and on the nature of the impurities. Referring to well-boiled massecuite of 75 purity or thereabouts, the time occupied by the various operations will be approximately :—Charging and accelerating, one minute to two minutes, the time depending on the power available; running at speed, two to three minutes; stopping, half a minute; discharging, half a minute. The cycle, in all, occupies rather less than five minutes, and at least twelve charges should be worked in an hour unless the massecuite is badly boiled or unless the molasses is very viscous for reasons outside the executive's control, as happens when operating on burnt cane. On occasion, however, much greater capacities obtain; with very free massecuite and with the operatives stimulated to extraordinary exertion, as many as twenty charges per hour can be obtained, provided there is sufficient power available to cut down the accelerating period to the lower limit. In installing plant, however, it is seldom safe to calculate for more than eight charges per hour.

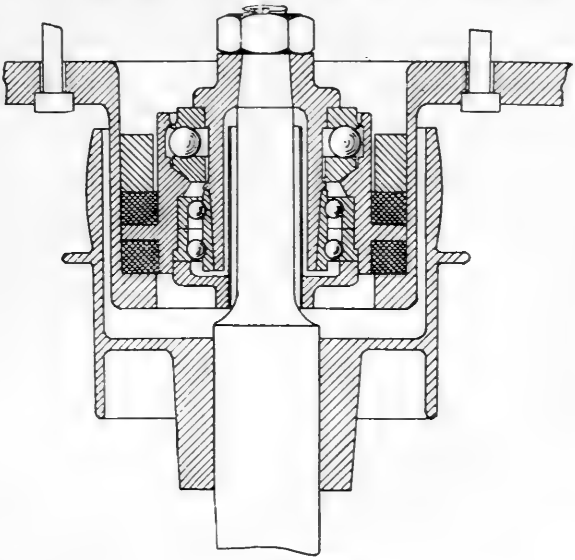

FIG. 262

As regards low massecuites of 55 to 60 purity the cycle is quite different, and is almost entirely occupied with running at speed. Fifteen minutes as the over-all time taken for drying one charge is probably below the average, and it is not advisable to reckon on more than three complete cycles to the hour.

Methods of driving Centrifugals.—The standard method of driving centrifugals is by belts. When the prime mover is a steam engine, the latter is usually found making about 60 to 90 r.p.m., so that the ratio of gearing between engine and machine will be about 1 to 20. The engine usually drives a countershaft, which in turn transmits motion to a second shaft, on which are mounted clutches, one for each machine in the battery. Occasionally high-speed engines making up to 200 r.p.m. are found. The first mention of electric drive is found in Watt's patent (2944, 1883); but its introduction is largely due to Williamson's patent (21262, 1896). In this design the field magnets forming the stationary part of the motor are attached to the inner stationary spindle, the armature being connected to the outer rotating spindle. In electric drive, as now carried out, the motor is mounted rigidly, and communication to the rotating spindle is made by a friction clutch or by flexible bearings. Water drive for centrifugals is due to Laidlaw and Matthey (patent 17101 of 1895), who attached a Pelton wheel to the rotating spindle. This method of drive has been very largely adopted.

In referring to electric and water drive, it must not be forgotten that in nearly all cases the steam prime mover stands behind the motor whether electric or water.

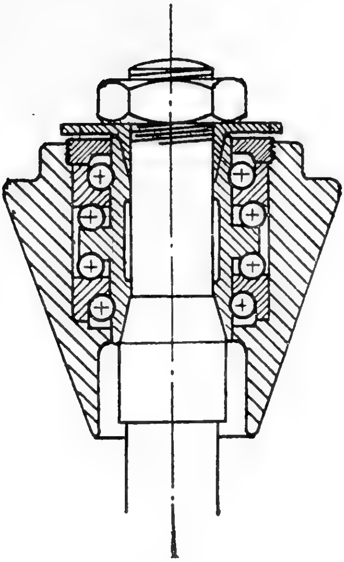

FIG. 263

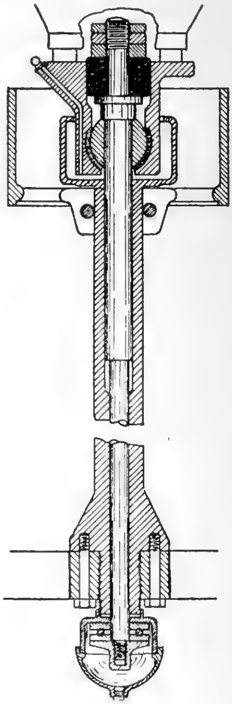

FIG. 264

In this case their principal difference is that in motor drive each machine has its individual motor, whereas with the older system it is a case of group drive from one larger motor. In discussing the centrifugal machine, it is shown that the power used over the cycle varies very largely from a minimum of zero when stopping to a maximum when accelerating. With individual drive, whether electric or fluid pressure, it is necessary to exaggerate the size of the motor to supply ample power during the acceleration, or otherwise to prolong this period unduly, thus cutting down the capacity of the machine. The water-driven machines of Watson, Laidlaw & Co., Ltd., are supplied with two jets, which operate during acceleration, one being automatically shut off when speed is attained. Similarly, the electric-driven machines are supplied with motors which can develop an excess of power over short intervals. Nevertheless, an individually driven battery is more expensive than one group-driven, and the sum total power of the individual motors will always greatly exceed that of the one larger motor, which need only develop the average power required for a battery, allowing for the time consumed in the five divisions of the cycle. Group drive does not prevent the use of electricity and the centralization of power. The writer inclines to the position that the most generally economical combinations are an electric motor driving a group of machines through the agency of belts or water-driven machines receiving power from a centrifugal pump.

Load on a Centrifugal.—If W be the weight of a particle constrained to move in a circle of radius r and at a velocity v, the centrifugal force exerted is $\frac{W v^2}{2 g r}$, where g is the acceleration due to gravity. In the case of a machine 42-in. × 24-in., with steel shell $\frac{3}{16}$-in. thick, perforated with $\frac{3}{16}$-in. holes at $\frac{7}{8}$-in. pitch, the value of W for the shell alone is 180 lbs., taking the specific gravity of steel as 7·8. The weight of eight hoops of steel each 1-in. by $\frac{1}{4}$-in. will be 75 lbs., to which has to be added that of the backing and perforated strainer, amounting to 15 lbs.; the total of these is thus 270 lbs. At 1,000 r.p.m. the value of v is 183 ft. per sec., so that the value of $\frac{Wv^2}{2 gr}$ is 146,000 lbs. The charge of massecuite will distribute itself in such a manner that its vertical section is a parabola, but with the vertex so distant that it may be considered as a hollow cylinder. The load may be taken as concentrated at the radius of mean position given by the formula

$$\frac{2}{3}\,\frac{R_1^3 - R_2^3}{R_1^2 - R_2^2} \quad \text{where } R_1 \text{ and } R_2$$

are the outside and inside radii of the hollow cylinder. If R_2 be 1·75 feet and R_1 be 1·25 feet, the value of the above expression is very nearly 1·5 feet; for this radius at 1000 r.p.m. v is 157 ft. per sec. If the charge of massecuite be 600 lbs., and if none escape before full speed is reached, the value of $\frac{Wv^2}{2 gr}$ is 308,000 lbs., so that the total load on the shell of the basket is 454,000 lbs. Deducting the area of the perforations the area of the shell is 3,322 sq. in., so that the pressure per sq. in. is 136 lbs.

The resistant cross-section is that due to the shell and to the rings: for the shell it is $\frac{8}{16} \times 18{\cdot}6 \times 2 = 7$ sq. ins. nearly, after allowing for the perforations. For the rings it is $8 \times 2 \times 1 \times 0{\cdot}25$, or 4 sq. in., in all a total of 11 sq. in. The force tending to break the basket is $p\,d\,l$ where p = pressure, d = diameter and l = height. Substituting the calculated values $p\,d\,l$ is $136 \times 42 \times 24$, or 137,000 lbs., so that the stress is $137{,}000 \div 11$ or 12,400 lbs. ($5\frac{1}{2}$ tons) per sq. in.

Force acting on Molasses.—If n be the number of revolutions per sec., r be the radius of gyration in feet, g be the acceleration due to gravity or 32 feet per sec., the centrifugal force acting on a particle is $\frac{4 \pi^2 n^2 r}{g}$ times that due to gravity. In the case of a 42-in. machine making 1,000 r.p.m.,

n will be 16 and r for a particle on the shell of the basket will be 1·75, so that the value of the above expression is 553, i.e., the force at the periphery tending to drive the molasses through the screen is 553 times that due to gravity.

Power used in Centrifugals.—The work done on a particle in reaching a speed v is $\frac{W v^2}{2g}$, where W is the weight of the particle. In the case of the machine considered above, the basket weighing 270 lbs. attains a speed of 183 ft. per sec. in, say, one minute. The load of 600 lbs. reaches in the same time a speed of 157 feet, and the rest of the machine, spindle, top and bottom of basket, pulley, etc., may be taken as weighing 300 lbs. and acting at a radius of one foot to reach a speed of 105 feet.

The value of $\frac{Wv^2}{2g}$ for these three items is 505,000 foot-pounds, and the average power developed, neglecting windage and friction, will be 505,000 ÷ 33,000, or 15·3 H.P. Since at the commencement of the operation the power is zero, the maximum power developed, assuming uniform acceleration, will be twice the average or 30·6. This quantity will be reduced if molasses are thrown off during acceleration, as is actually the case. When speed is reached only the power to overcome friction and windage is required, and eventually during the period of slowing down and discharge no power is consumed.

Provided the prime motor has sufficient power to keep the machine running at full speed, this speed would eventually be attained, though without an excess of power the period of acceleration may be so prolonged as to cut down the capacity of the battery materially. This point is of importance as regards the choice of drive, and is discussed elsewhere.

Some actual results given the writer by Mr. W. G. M. Phillips follow:—

A 40-in. × 24-in. machine with motor attached to spindle consumed 45 H.P. when reaching a speed of 1,060 r.p.m. in 70 seconds, falling to 21·5 H.P. when the time to full speed fell to 150 seconds.

With eight 40-in. × 24-in. machines and mixer, belt-driven off a motor, the electrical input averaged over a long period and obtained from a recording instrument was 60 kw., corresponding at 90 per cent. efficiency to 72·5 H.P. delivered to the machines, or to 9·06 H.P. per machine. The sugar produced per hour was 26,650 lbs. Evidently in machines working up low sugars where the acceleration period is only about 10 per cent. of the total time of operation, the power required is much less.

With smaller machines the power required is roughly proportional to the decreased output, increasing, however, more rapidly than the output decreases, since the dead load carried is greater in proportion with the smaller machines. Further, in installations of fewer machines the power per unit must be increased, since the demand for power will not be so evenly averaged.

Centrifugal Speeds.—In discussing centrifugal speeds the distinction between equal speed and equal centrifugal force must be recognised. Evidently if D be the diameter of the basket and if N be the revolutions per minute for equal peripheral speed, $DN =$ constant. The equation for equal centrifugal force, however, is $DN^2 =$ constant, and accordingly as the diameter of the basket increases so also must the peripheral speed, if it is desired to maintain the centrifugal force constant.

When the Weston centrifugal first came into use it was designed for 1,440 r.p.m. with reference to a 30-inch machine, which for a number of years was the only size built. But within a few years the makers reduced this speed to 1,200 r.p.m. and the centrifugal force corresponding to this diameter and to this speed remains generally a standard at present. The table below gives the r.p.m. in other sizes required to give an equal peripheral speed, and an equal centrifugal force.

EQUIVALENT SPEEDS REFERRED TO 1,200 R.P.M. AND 30-INCH MACHINE.

Diameter. inches.	Equal Peripheral Speed. Revs. per min.	Equal Centrifugal Force. Revs. per min.
30	1,200	1,200
36	1,000	1,095
40	900	1,039
42	857	1,013
48	750	948
54	667	894

It also follows that with the larger-sized machines, run at equal centrifugal force, the stress in the shell of the basket is greater, necessitating either a greater section or the use of materials of higher tensile strength.

The relation between speed of rotation and water left in the material has not, the writer believes, been worked out in detail. Reasoning by analogy a law similar to that found by the writer as holding between pressure and quantity of juice extracted on crushing cane (*cf.* Chapter XI) would probably result. If such be the case great increases in the speed would be accompanied by but small decreases in the quantity of water left in the dried material. The following data on drying yarn made in 1878 have been given to the writer by Mr. A. R. Robertson, of the firm of Watson, Laidlaw & Co., Ltd., and, though incomplete, bear out the ideas put forward above.

Diameter of machine.	Revs. per min.	Time spinning min.	Weight of dry yarn lbs.	Weight of yarn as taken from machine.	Water remaining in yarn.	Water per 1lb. of dry yarn.
30 inches	1500	4	60	107·5	47·5	0·791
30 ,,	1500	7	60	107·25	47·25	0·787
30 ,,	1500	4	60	105·5	45·5	0·785
30 ,,	1500	7	60	105·25	45·25	0·754
30 ,,	2000	4	60	105·25	45·25	0·704
30 ,,	2000	4	60	102	42	0·7
36 ,,	900	4	120	223·5	103·5	0·862
36 ,,	900	7	120	222	102	0·850
36 ,,	1000	3	120	221	101	0·841
48 ,,	900	3	120	229	109	0·908
48 ,,	750	4	180	350	170	0·944
48 ,,	900	5	180	342	162	0·9
48 ,,	900	2	180	342	162	0·9
48 ,,	900	4	180	337	157	0·816

These experiments show very clearly that when once a certain limit has been reached prolonged spinning does not further decrease the water content. If the limit to which the water can be removed is reached when the centrifugal force balances the force due to surface tension between the crystal and the liquid, it follows that prolonged duration of rotation will not further decrease the water content after these forces are once balanced.

The drainage of molasses from a massecuite in a centrifugal may be considered as a special case of the flow of a liquid through a system of capillary tubes, which are formed by the interstices between the crystals. The equation for this flow is given by Poiseuille's law,[1] in which $F = C \times \frac{\pi p d^4}{32 \mu l}$ where d is the diameter of a tube of length l, p is the pressure, w is the viscosity, F is the rate of flow and C is a constant. The pressure acting on the molasses varies as the square of the number of revolutions and hence also does the rate of flow. The time required to expel the molasses should then decrease with the speed and should be accompanied by an increase in the capacity of the machine.

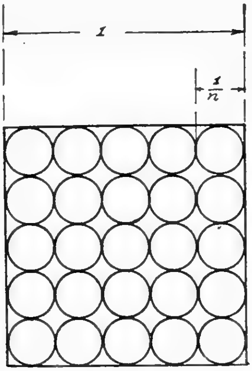

FIG. 265

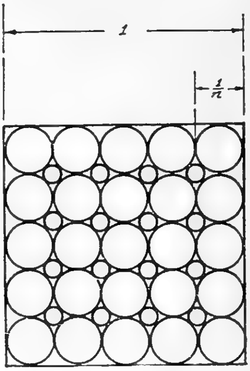

FIG. 266

The deciding factors governing the economical speed are prime cost and strength of materials taken together. It does not appear probable that in the sugar industry there will be any departure from the present standard practice as regards speeds, which are those given in the table above and are based on equal centrifugal force and 1,200 r.p.m. in a 30-inch machine.

Size of Grain as affecting Centrifugal Capacity.—Consider a square of side one unit in length in which there are arranged n^2 circles each of diameter $\frac{1}{n}$ as in *Fig.* 265. The area occupied by the circles is $n^2 \times \frac{\pi}{4} \times \frac{1}{n^2} = \frac{\pi}{4} =$ constant, and the sum of the interstitial spaces between the circles is $1 - \frac{\pi}{4}$ which is also constant. Hence whatever be the diameter of the circles the sum of the areas of the interstitial spaces is the same. In the case of a massecuite contained in a centrifugal basket the interstitial spaces between the crystals may be considered as forming a system of capillary tubes through which the molasses flows under the influence of the pressure due to the centrifugal force. If d be the diameter of a circle in *Fig.* 265 the "diameter" of an interstitial space is md where m is constant and the number of spaces in unit area $\frac{m}{d^2}$ where m is constant. The flow of a fluid through a capillary tube is given by Poiseuille's law, which states that the rate of flow is proportional to the fourth power of the diameter of the tube. It hence follows that $F = \frac{k\,d^4}{d^2} = k\,d^2$ where k is constant, or the rate of flow of the molasses in a centrifugal will vary as the square of the diameter of a crystal.

Again, if there be n crystals in unit volume of massecuite, the diameter of each crystal will be $\frac{c}{\sqrt[3]{n}}$ where c is constant ; it follows then $F = \frac{c}{\sqrt[3]{n^2}}$ where c is constant ; also for n may be put v where v is the quantity of syrup from which grain is formed or pied-de-cuite left in the pan, whence also $F = \frac{k}{\sqrt[3]{v^2}}$ where k is constant.

The initial basis of reasoning adopted in this section assumed that all the circles were of equal size ; if there are introduced smaller circles, as in *Fig.* 266, these may be inserted between the larger circles, thus closing up the interstitial spaces forming the capillary tubes. This is precisely what happens when the operator obtains an uneven grain or when a second granulation known to operators as false grain occurs. It is then easy to realize that evenness of grain is of much more importance than is diameter of crystal.

The other conditions governing the quantity of water that remains in sugars may be discussed here. This quantity will be controlled firstly by the pressure acting on the molasses, which is a function of the centrifugal force in turn controlled by the speed of rotation. A second factor is the viscosity of the molasses, and, though no definite relation can be stated, the greater the viscosity the greater will be the quantity of molasses adhering to the crystal. This effect can be controlled by drying the massecuites hot as they leave the pan, or by diluting the film of molasses as by washing with water in the machine.

A third factor is the surface area of the crystal to which the quantity of molasses adhering is proportional. The surface area is inversely proportional to the diameter of the crystal, so that, if w is the water remaining in the sugar, $w = \frac{k}{d}$ where k is a constant and d is the diameter of the crystal.

The only experiments dealing with the discussion above that the writer has encountered are due to Geerligs.[2] He made mixtures of 600 grams of crystals of varying diameter and 400 grams of syrup, after which the magma was allowed to drain for three days, affording the results tabulated below.

Diameter of Grain, m.m. = d.	Syrup run off grams = F.	$\frac{F}{d^2}$
3·0	300	33
2·0	265	66
1·5	200	89
1·0	115	115
0·5	20	80

Capacity of Machines.—This term is used to refer to the volume as defined by the shell, the lip and a perpendicular dropped from the inner edge of the lip to meet the bottom of the basket. This volume forms the maximum volume occupied by the dried charge. The volume of the charge delivered to the machine will be less than this, and the capacity in cubic feet over a stated period will depend mainly on the purity of the massecuite, the skill used in boiling, and the power available for driving. Referred to a 75 purity massecuite, as obtained in a two-massecuite process, the capacities given below may be taken as conservative. These may be diminished or increased 10 per cent. when referred to a 70 purity and 80 per cent. purity massecuite produced in a three-massecuite process. The actual volumes will, of course, vary from maker to maker.

Machine, inches.	Capacity cu. ft.	Charge cu. ft.	Cu. ft. of 75 purity massecuite per hour.
42 × 24	8	7	80
42 × 20	6·75	5·75	67
40 × 24	7·5	6·5	75
40 × 20	6·25	5·25	62
36 × 18	4·5	3·75	45
30 × 18	3·75	3	34

Determination of Centrifugals required.—In Chapter XIX the quantity of massecuite produced per ton of gravity solids in the juice has been calculated both for a two-massecuite and for a three-massecuite process. It was also shown there how these quantities varied with the purity of juice. Referring to the table in that chapter it will be seen that when there is a low purity originally, say 75, for every ton of gravity solids there is produced 0·524 ton of 55 purity massecuite, and 1·035 ton 75 purity massecuite, including here the low sugar obtained from the 55 purity material. With a high purity of 90 these figures become 0·167 ton and 1·572 ton respectively. In the course of a crop the gravity solids in the juice and consequently also per ton of cane are constantly varying, as is also the purity. Accordingly, at one period of the crop there may be an excess capacity in the centrifugals, and later on in the season the capacity may be too small. In addition, the proper distribution of the centrifugals as between high grade and low grade machines will be constantly changing.

To illustrate this point a concrete example may be taken :—An installation is required to treat the massecuite resulting from 100 tons of juice per hour, the extreme composition being 77 purity and 15 per cent. gravity solids and 85 purity and 18 per cent. gravity solids.

A two-massecuite process is to be used at purities of 75 and 55. From the table in Chapter XIX it follows that there result—

	lbs.
77 purity gravity solids per hour in 75 purity massecuite	32,970
,, ,, ,, ,, ,, 55 ,, ,, ...	14,310
85 ,, ,, ,, ,, 75 ,, ,, ...	49,672
,, ,, ,, ,, ,, 55 ,, ,, ...	10,296

In a preceding section a 40-in. × 24-in. machine was given as handling 80 cu. ft., or 7,200 lbs. containing 6,800 lbs. gravity solids per hour, at 75° purity. A 36-in. × 18-in. machine may be expected to handle 850 lbs. of gravity solids per hour at 55 to 60 purity.

There will then on this basis be required :—

			Machines.
77 purity	75 purity massecuite	$\frac{32970}{6800}$	= 4·8 of 40-in. × 24-in.
	55 ,, ,,	$\frac{14310}{850}$	= 16·9 of 36-in. × 18-in.
85 ,,	75 ,, ,,	$\frac{49672}{6800}$	= 7·3 of 40-in. × 24-in.
	55 ,, ,,	$\frac{10296}{850}$	= 12·0 of 36-in. × 18-in.

As the installation must allow for the maximum at the different conditions, the design would resolve itself into six 40-in. × 24-in. machines for high grade and eighteen 36-in. × 18-in. machines for low grade, some multiple of three being taken in this case, since one unit of labour can handle three machines.

Alternatively, a design might be offered comprising six 40-in. × 24-in. machines on high-grade and twelve 36-in. × 18-in. machines on low grade, with six 36-in. × 18-in. machines connected to work on either, changes being made dependent on the purity of the material being handled.

It is not unusual to express centrifugal capacity as so many square feet of screen area per ton-cane-hour. A 40-in. × 24-in. machine offers 21·1 sq. ft., and a 36-in. × 18-in. machine 14·1 sq. ft. In this case then there will be 423 sq. ft. in all, and if the 100 tons of juice are derived from 100 tons of cane the proportion is 23 sq. ft. per ton-cane-hour, of which 40 per cent. is used on high grade and 60 per cent. on low grade. Screen area is not, however, an altogether satisfactory basis of comparison except as between machines of the same size, for, whilst the screen area varies as the product of the diameter and height of basket, the capacity varies as the net cubic contents.

In any case a flat rate does not form a good system of design, which should be considered in detail for every case with a knowledge of the purities and densities of the juice, as well as of the tonnage of cane to be handled.

Handling of Low Sugars.—In the older processes of repeated boilings a quantity of fine-grained molasses sugars of 88 test or thereabouts was obtained. This material is of low comparative value, and its marketing is attended with difficulty. The best way to dispose of it is to remelt it or to take it into the pans as seed grain. In the two and three-massecuite processes described in the previous chapter the low sugars are boiled on a footing of high grade massecuite, so that they are of large grain, and if necessary can be washed up to 96 test. It is, however, much more convenient to double-cure these sugars. They are accordingly dropped wet from the baskets, mixed with sufficient high-grade molasses to allow of pumping, and mixed with the high-grade massecuite ; alternatively, they may be re-dried separately in independent machines. This process of double purging was first used by G. L. Spencer at Tinguaro, in Cuba, about 1900.

When these low sugars are mixed with high-grade massecuite, a uniform distribution should be obtained. This is best done by running a canal parallel to and over the centrifugal supply tank. Part of the canal is cut away precisely as is done with the " cush cush " distributors in use at the mills.

Centrifugalling for White Sugars.—When plantation white sugars are made, a more complete removal of the adhering molasses is necessary. This is effected by washing with water and with steam. The water used should be as pure as possible, and the condensed steam available in every factory forms a suitable supply after cooling. Before the steam is allowed to act on the wall of sugar it should be freed from water by being passed through a separator. With high-grade massecuites the quantity of water used for washing is about thirty lbs. in a 40-in. centrifugal, or 1 lb. to 10 lbs. of sugar. The quantity of steam used is about 1 lb. to 5 lbs. of sugar. With lower grade massecuites boiled from first molasses these quantities are doubled.

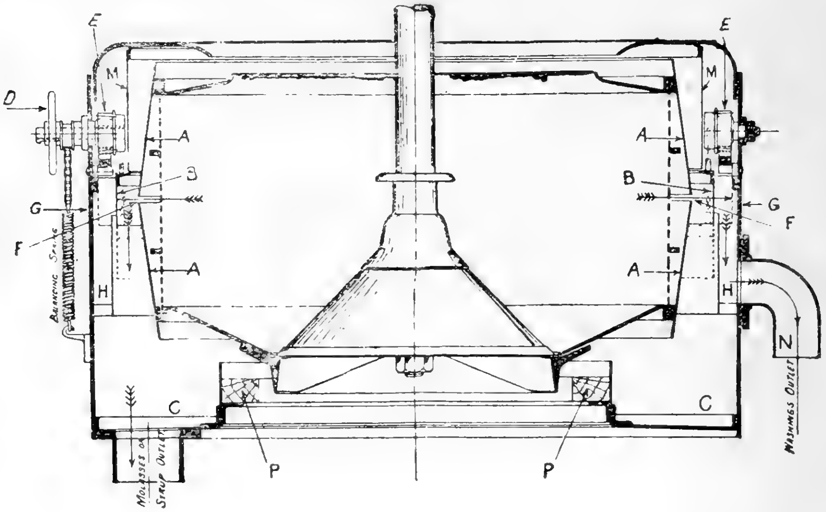

FIG. 267

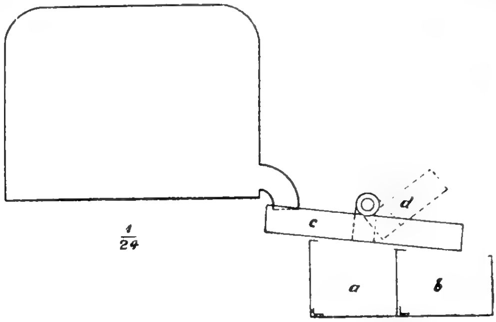

FIG. 268

When following this method the water and steam runnings are of very high purity, and it is expedient to separate them from the first runnings and to return them separately to the high-grade product. This process is known as the classification of molasses, and the scheme was first suggested by Perier in the European beet sugar industry in 1852. Donner's patent

(3553 of 1874) specifies the use of two gutters and of a casing, interior to the curb or usual outer casing, and capable of being raised in a vertical plane. Material caught on this casing is delivered to one gutter, that intercepted by the curb when the interior casing is raised passing to the other gutter. This principle is contained in various later patents, that of Patterson (22384 of 1897) being indicated in *Fig.* 267. The use of individual gutters alone appears in patent 11842 of 1897, *Fig.* 268, granted to Lubinski and Krajewski, but the absence of a second surface to receive the purer runnings leads to an imperfect separation.

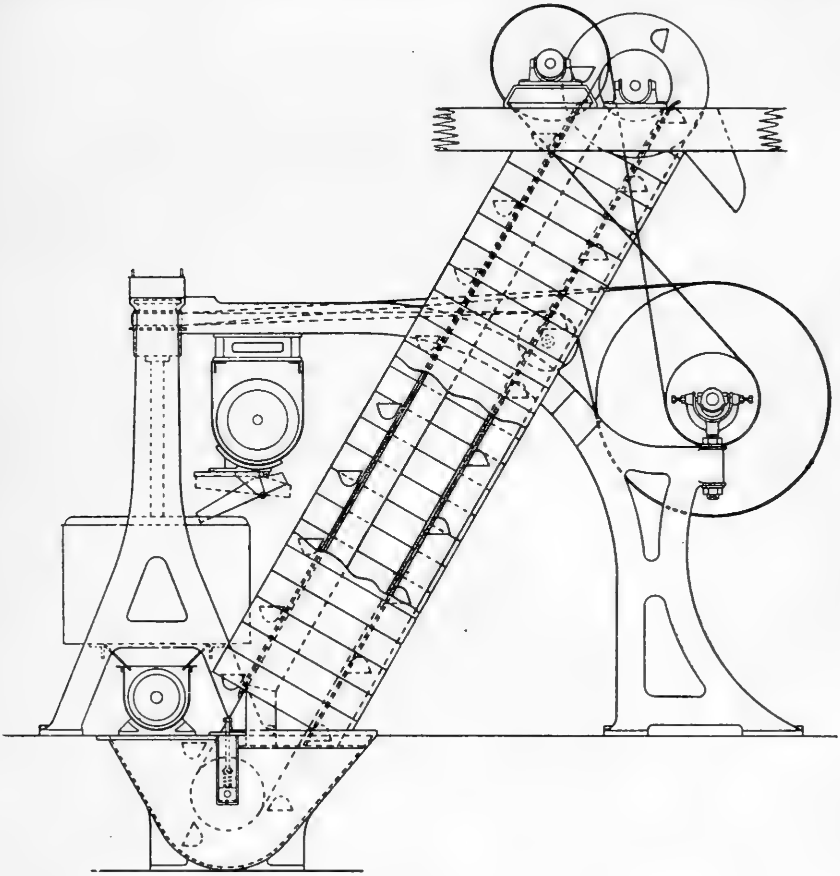

Fig. 269

In Matthewwissen's patent (24993, 1901) vanes are formed in the curb, and the direction of rotation of the basket is changed when washing begins, the flow of the molasses being directed to independent gutters by the vanes.

MacFarlane's patent (26716, 1902) employs an imperforate cone-shaped basket separated from the screen. The molasses projected on to the inner wall drain off vertically, and are directed into one of two gutters according to the position of a cylindrical screen, the arrangement of which is adjusted by the operator.

Another more complete and preferable scheme is that of double curing.

In this scheme the molasses are expelled in the first set of machines, the sugar being dropped without any washing. It is then made up to a magma with purging syrup and redried or affined in a second set of machines. In the first operation the sugar from the first drying is made up to a magma with water, and the resulting "molasses" forms the purging syrup used in subsequent operations, circulating continuously; the excess as it accumulates is boiled into first product, or it may be returned to thin juice, since, being of very high density, it is not advisable to introduce it direct to the pan without dilution. The second quality white sugar may be treated in a similar way, or after mixing with first molasses it may be dried along with the first massecuite, the factory then producing only one grade of white sugar. The great advantage of double curing lies in the complete classification of the molasses which it affords.

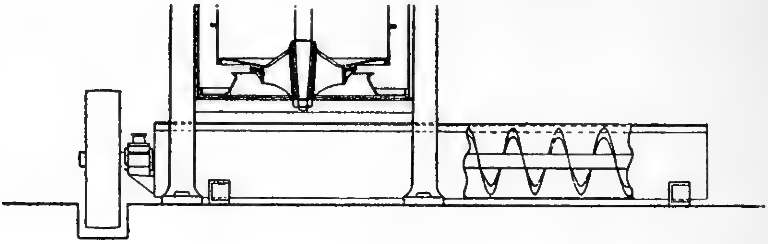

FIG. 270

When calculating the number of centrifugals required for white sugar manufacture, only half the capacity of that accepted for 96 test should be taken, so as to allow for the extra time consumed in washing with water and steam. If steam washing is dispensed with in favour of a sugar dryer, this extra allowance may be decreased. If double curing be installed, either set should have the same capacity as would be employed with 96 test sugar.

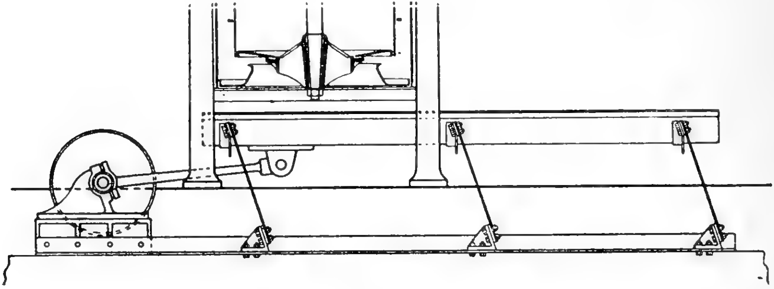

FIG. 271

Conveyance of Sugar.—Occasionally the dried sugar is discharged direct from the machines into bags, but it is usually conveyed to an upper floor or bagging bin by means of an elevator of the type shown in *Fig.* 269. The crystals are carried from the machines to this elevator by a screw conveyor, as indicated in *Fig.* 270, or by a "grasshopper" conveyor, *Fig.* 271. This consists of a suspended trough, which is supported on flexible inclined blades, and to which a to-and-fro motion is transmitted by means of an eccentric.

The Continuous Centrifugal.—A number of inventors have attempted to develop machines which will operate continuously and avoid the time and power lost in starting and stopping and in charging and discharging. No great success has been obtained so far, but the principles applied are:—

1. A horizontal machine, in which rotates a screw moving at a slightly lower speed than the basket, whereby the material is propelled forward and discharged dry at the end of the machine remote from the inlet. This idea is contained in Aspinall's patent (1196, 1855), and has been in particular developed by Stewart (6931, 1884, and 13655, 1888).

2. A fluid introduced into a rapidly rotating vertical cylinder will tend to rise against gravity, precisely as is observed in the ordinary machine. This tendency may be assisted by maintaining communication with the incoming material by defining a passage for its motion. In such a scheme it is intended that the dried material should eventually discharge itself over the lip of the basket. This device is included in Bessemer's patent (13202, 1850), in Aspinall's (2833 of 1855), and in several later ones.

3. If the shell of the ordinary machine be removed or opened when the basket is at speed the wall of dried sugar will be expelled. This idea is developed in patents 13846, 1851, and 1433 of 1854, and by Abel, 22900 of 1905.

4. Another patent, also due to Abel (14736 of 1889) places a number of baskets inside the main basket and located around its periphery. These baskets rotate with the machine and simultaneously about their own axes. They are divided into compartments by radial partitions, and located about the centre of each basket is a cone. Massecuite is fed into the cone and thrown into those compartments furthest from the axis of the main basket, whence the molasses is expelled by the usual action. As the baskets rotate about their axes each compartment in turn will arrive at a position when the wall of the basket lies between the sugar contained therein and the axis of rotation of the main basket. In this position the sugar is thrown out against the outer side of the cone and falls into a funnel-shaped receptacle, which directs it to the conveyor.

REFERENCE IN CHAPTER XX.

1. *C. R.*, 1847, 24 1074.

CHAPTER XXI

RAW SUGAR

By raw sugar the writer understands a material prepared directly from the plant juice, and without any intermediate process of remelting or refining. Under this definition white plantation sugars of very high purity would be classed as raws, whilst the "softs" or "yellow" sugars of the refinery of very much lower purity would rank as refined. A recent publication of the U.S. Bureau of Commerce however adopts an opposite view, and defines refined sugar as "chemically pure" sucrose; if the term "chemically pure" be accepted within narrow limits a cane sugar-house specialising in plantation white would become a refinery, and the "softs" and "yellows" produced by what is generally accepted as a refinery would be classified as raw sugars.

In the very early days of sugar manufacture the product was cane juice concentrated nearly to dryness and known in India as "gur," the name being derived from the Sanskrit *gul* or *gud*, a ball, and relating to the form in which such sugar appeared on the market. With increased skill there appeared a material in small crystals called *sarkara*, originally meaning gravel, and a material in larger crystals called *khanda*, the word denoting a piece. From these terms descend the words sugar and candy. Another Indian term, *jaggery* (a corruption of *sarkara*), appears to connote a date-palm raw sugar.

The ancient Indian market also recognized (and as a folk custom continues to recognize) Cairene or Egyptian sugar (*misri*) as a superior article, the antithesis being China sugar known as *chini*. To the white refined sugar originally produced in Persia the name *tabaschir* was given, originally denoting a white siliceous product found in bamboos.

In the old New World industry, two main classes of sugars were made, *muscovado** and *clayed sugar*. The former was a crystallized product from which some of the adhering molasses had been removed by drainage; in the latter a less imperfect separation had been obtained by allowing a suspension of clay and water to percolate through the mass. Another term appearing in early days is *cassonade*, primarily implying a sugar shipped in chests. One form of cassonade was powdered clayed loaf shipped to France in this form so as to avoid a higher customs duty. Elsewhere, the term seems to be applied to an inferior type of raw sugar.

New processes introduced new expressions and thus arose the terms Vacuum Pan Sugars as opposed to Common Process Sugars, Centrifugals as opposed to sugars dried by drainage, and Concrete Sugars in which no drainage occurred at all.

Sugars were once, and to a certain extent still are, classed according to the Dutch Standard. In this scheme, 25 D.S. (as it is abreviated) was a

---

* The best authorities derive this term from the Spanish, *menoscabo*, implying damage and the idea of inferiority, and derived from *menos*, little, and *acabar*, to finish. Acabar appears in French as *achéver*, whence the transition to *méchef* and the English *mischief* is easily seen. A second derivation may be through the Low Latin *muscum* meaning musk (whence is derived *muscatel*) and correlating with the pleasant smell and taste of raw sugar; the Italian term *musciatto* certainly seems very far from *menoscabo*. The derivation sometimes found from *mas*, more, and *acabodo*, finished, i.e., the process carried beyond the syrup stage, seems fantastic.

sugar nearly white, the opposite end of the scale being 6 D.S., representing the darkest sugars appearing in commerce. Formerly in the U.S. market, sugars above 12 D.S. were considered as refined, and paid a higher duty.

The raw sugars intended for refiners' use have received various and somewhat confusing trade appellations. In the United States market, the great bulk of the supplies come from Cuba, Porto Rico and Hawaii. These sugars are sold on a basis of 96 degrees polarization, and are very commonly called Centrifugals. Other terms are 96 Test Crystals, Dark Crystals, and Refining Crystals. The Java producers make two classes of refining crystals. One, 16 Dutch standard and higher, polarizes about 98 and contains about 0·5 invert sugar, 0·25 ash, 0·5 water and 0·75 organic non-sugar. This type of sugar is known also as Channel Assortment or European Assortment. The other type lies in colour between 12 and 16 D.S., and polarizes about 96. It is known as American Assortment, and in Java as Muscovado. Elsewhere muscovado is used to indicate a sugar similar to the original muscovado and synonymous with the terms "open kettle," "common process."

Other low-grade sugars appear under self-explanatory terms, such as Molasses Sugars, Stroop Sugars, Sack Sugars, Philippine Mats, Concrete. In Latin America these low-grade sugars have numerous names such as Pilon, Piloncillo, Dulce, Panela, Panoche and Raspadura.

Raw sugars were formerly classed as first, second, etc., a first sugar being boiled from juice, a second from first molasses, and so on. With improved methods of operating calling for the return of molasses to process, this classification is no longer available.

Direct consumption raw sugars fall into two classes, white and yellow. Java, Mauritius, Egypt, Natal, Brazil and Argentina produce large quantities of plantation white sugar for local and near-by accessible markets. The Java market recognizes three grades :—1. Superior hoofdsuiker (head sugar) of nearly 100° test and 25 D.S. This is boiled from juice only. 2. Superior stroopsuiker (molasses sugar), boiled from the runnings from the first class, with or without admixture with first product. This material is sold moist and contains about 0·4 per cent. of water. 3. Hoofdsuiker of 18 D.S. up to 25 D.S., a material similar to the first-named, but of lower quality. In Mauritius two qualities, *vesou* (juice) sugar and *première sirop*, only are recognized. Yellow sugars, known as Demerara crystals, yellow clarified or grocery sugars, are mainly made in Demerara for the London and in Louisiana for the local market. All the above sugars are sold on appearance only. The peculiar flavour of these raw sugars, which adds much to their value, has been attributed to the formation of bodies formed by the interaction of amides and reducing sugars in the process of manufacture, and in addition account must also be taken of the presence of essential oils which may also be present in the cane.

The validity of the use of the term "Demerara" to raw yellow cane sugars made elsewhere has been challenged, but in the British courts it has been decided that the term has no peculiar geographical significance, and applies to the process and not to the locality. Dyed sugar crystals, whether of beet or cane origin, stand on a different footing altogether, and the substitution of these for a raw cane product is an evident fraud. A more difficult situation arises regarding materials boiled in refineries from imported remelted material. A criterion might be established with reference to their passage or not over char, a process which will remove those bodies to which the peculiar characteristics are due. An attempt to give to beet crystals the peculiar flavour of cane products is seen in Bensen's patent (225 of 1866), which proposes to mix the former with cane molasses. More lately this idea was revived by Winter, who has proposed to use invert sugar syrups which have been exposed to the action of alkalies.

The Composition of Raw Sugar.—Raw sugar, whether a consumption sugar or one designed for remelting and refining, may be considered as consisting of a crystal of nearly pure sucrose coated with a film of molasses. The quantity of molasses adhering to the crystal will depend on the surface area of the crystal, the viscosity of the molasses, and the speed of rotation of the centrifugals in which the sugars are dried. The composition of a typical raw sugar as conceived as consisting of crystal and molasses may be readily obtained. If, for example, molasses contain 20 per cent. water, the percentage of water in the sugar multiplied by 5 will give the percentage of molasses. At the moment of discharge from the basket 96 test sugars of average size of grain, and under the usual conditions of manufacture, will be found to contain about 1·25 per cent. water, whence the percentage of molasses is 6·25 per cent. and of crystals 93·75 per cent. If this molasses polarizes 36, the polarization of the sugar will be $93 \cdot 75 + 0 \cdot 0625 \times 36 = 96 \cdot 0$. Such a sugar would be obtained from a massecuite of 75 purity, and such a sugar is typical of a very great proportion of those that are offered for sale to the refiners.

After discharge from the basket, sugars of this class will generally be found to lose water and they arrive at the port of destination with but little over 1 per cent. of water. The actual quantity of water present when melted will depend, of course, on atmospheric and storage conditions at the location of origin, in transit, and at the point of delivery.

Accepting a raw sugar as constituted of crystal and molasses in fairly constant proportion, its polarization will be dependent on the composition of the molasses, and since (*vide* Chapter XIX) the percentage of sugar in a molasses increases as the purity of the magma whence crystallized increases, the polarization of the sugar will also increase. Thus from a massecuite of 85 purity molasses polarizing 50 may be expected, and if the sugar still contains 6·25 per cent. of molasses the polarization of the sugar will, at the moment it is dropped from the centrifugal, be $93 \cdot 75 + 0 \cdot 0625 \times 50 = 96 \cdot 875$. The differences found between sugars obtained from high and low purity massecuites will, however, be rather larger than indicated by calculation, since the molasses of high purity being less viscous are less incompletely removed from the crystal. On the other hand, as the purity of the massecuite falls, so also does the purity of the molasses, and when the sugars are crystallized from massecuites of very low purity the polarization of the sugar falls. In this case, however, there is another factor at work. Such sugars have a very small crystal, and hence the surface area of the crystals is very large, indicating a very large retention of molasses. The sugars obtained from massecuites of about 50 purity boiled blank normally contain about 5 per cent. of water, indicating the presence of 25 per cent. of molasses. If the molasses polarizes 30, the polarization of such a sugar will be $75 + 0 \cdot 25 \times 30 = 82 \cdot 5$, a normal figure for such material. Sugars of this class are, however, of minor interest, since their production tends to become less and less as improved methods of manufacture become more common.

The above argument does not take into consideration one point of interest in that it assumes the crystals are pure sugar. In every case some adsorption of non-sugar occurs, and this adsorption is greater as the purity of the mother liquor falls. In certain cases the presence of non-sugar may modify the shape of the crystal, and in some cases at least—with sodium chloride—a definite molecular compound of sugar and salt crystallizes.

The conclusions to be drawn from the above argument may be modified in two ways in actual practice. The manufacturer may dry his sugar after it leaves the centrifugals; such an operation, while appreciably raising the polarization and diminishing the water content, will leave the value of the other constituents appreciably unaltered within the limits of the ordinary analysis. In the second case the adhering molasses may be removed in whole or in part by washing with water, whereby raw sugars of high polarization may be obtained from low purity massecuites. Such sugars can be obtained with a very low water content owing to the dilution of the molasses and consequent decrease in the viscosity.

Finally, as regards the sugar on its arrival at port of destination, further disturbance, due to the action of micro-organisms, may have occurred through inversion of sugar, and the destruction of inverted sugar thus formed and of that originally present.

The non-sugar present in raw sugars is derived principally from the non-sugar in the juice and its composition is modified by the manufacturing process under the following heads: 1. Phosphates and albuminoids are precipitated. 2. Non-sugars are added, as lime and occasionally as sulphurous acid and phosphoric acid. 3. Sugar may be caramelized or inverted into reducing sugars, and reducing sugars may be broken down by the action of heat and lime appearing as organic lime salts. 4. Mineral matter may be precipitated as scale on concentration. 5. On storage reducing sugars may be both formed from cane sugar, and reducing sugars thus formed and those originally present may be destroyed by the action of micro-organisms. It is customary in analysis to report reducing sugars, ash, and organic non-sugar, the last-named as obtained by difference. Owing to the variation in the amounts of these substances originally present and to the alterations in manufacture, it is impossible to give any definite composition for the non-sugar, but it will be found that in the great majority of cases the ash is present in less than half the quantity of either the reducing sugars or organic non-sugar, and that these are present in quantities of the same order.

A typical 96 test made from a 75 purity massecuite not washed or subsequently dried will contain from 0·4 to 0·7 per cent. ash and from 1 to 1·5 per cent. of both reducing sugars and organic non-sugar. Taking this sugar as typical, the composition of sugars obtained from massecuites of higher and lower purity and of washed sugars can be calculated.

The following generalities are, however, allowable:—

1. Sugars made from heavily fertilized canes will contain a larger proportion of ash.

2. Sugars made from exceptionally ripe and pure canes will contain a small proportion of reducing sugars.

Both the influences mentioned above are to be observed in Hawaiian sugars.

3. In sugars made from low grade material, especially from massecuites boiled blank and cooled at rest, the proportion of reducing sugars tends to increase, due to an increase in the reducing sugars following on inversion of cane sugar.

The largest constituent present in the ash of a cane sugar is potash. The other bases present are lime and magnesia, with traces of iron. The acids with which these are combined are organic acids (appearing in the ash as carbonate) sulphuric, silicic, and phosphoric. Chlorides are also very often present. From inspection of a large number of analyses the following may be given as the limits in which these occur :—

Potash 40 to 50 per cent. ; lime, 3 to 10 per cent. ; magnesia, 1 to 5 per cent. ; soda, 0 to 1 per cent. ; carbonic acid, 5 to 20 per cent. ; sulphuric acid, 4 to 15 per cent. ; silicic acid, 1 to 5 per cent. ; phosphoric acid, 0 to 2 per cent. ; chlorine, 5 to 20 per cent.

The actual composition of the ash will be influenced by conditions of soil, manuring and variety and by the maturity at harvesting.

Of the organic non-sugar, but little is known ; as calculated from the composition of molasses a typical 96 test sugar will contain from 0·05 to 0·2 per cent. of gums (or alcoholic precipitate) ; from 0·01 to 0·05 per cent. of nitrogen, much of which is present as amide, very great variation being observed as between different analyses. Calculated from carbonic acid in the ash the organic acids may be estimated as from 0·05 to 0·2 per cent. In the balance, which is more than half of the organic non-sugar, will be found caramel, all the bodies of unknown constitution and varying quantities of suspended matter derived from cane fibre.

The Physical Characteristics of Raw Sugar.—The physical characteristics of a raw sugar that have influence in determining its value are the amount of insoluble matter, the size and the regularity of the grain, the hardness of the grain, and the nucleus of the crystal. The quantity of suspended matter depends on the efficiency of the defecation process, and what insoluble matter is present is due to suspended particles carried through the processes. It consists very largely of particles of cane fibre. The quantity present in raw sugars of 96 test made by a process of defecation without bulk filtration will vary between the limit of 0·02 to 0·2 per cent., with an average of about 0·1 per cent.

The size of the grain varies from a maximum of over 2 mm. side to a minimum of less than 0·5 m.m., but in any one sample grains of all sizes will be found with a very different distribution of crystals classed as large, medium and small.

The hardness of a sugar is doubtless a misnomer, since it is probable that all crystals as individuals are equally hard. What is indicated by the term is rather friability. A sugar composed of small crystals cemented together by molasses will be easily crushed between the fingers and will appear soft to the touch, while one consisting of large individual crystals will appear hard under a similar test.

By the nucleus of the crystal is indicated a difference in the method used to form grain. Generally, the grain is formed directly from the syrup, but in other cases low grade sugars of small grain are used as seed. In the latter case an impure material is contained in the interior of the crystal.

The colour of the sugar refers to both the colour of the dry sugar and to the colour in solution. It is evident that the colour will be correlated to the quantity of molasses adhering to the crystal. What colour is actually present may be due to the natural colouring matter of the cane, or may have been developed in the process of manufacture by the action of heat-giving caramel or by the combined action of heat and lime on the reducing sugars.

The last two classes of colouring matter are objectionable to the refiner as resistant to the action of bonechar. All these characteristics are of more interest to the refiner than to the producer. The former is benefited by the absence of insoluble matter, by a large and regular grain with the absence of nests of crystals cemented together by molasses, by a nucleus formed from syrup and not from seed grain, and by little colour, especially that formed by overheating or by the breaking down of reducing sugars.

Sugar Drying.—In the manufacture of white sugar the crystals are dried after they are discharged from the machine. The apparatus usually employed for this purpose consists of a long inclined drum, *Fig. 272*, which is caused to rotate about its axis at a speed of about 12 revolutions per minute. Attached to the inner periphery of the drum are a series of paddles, which serve both to carry the sugar forward and at the same time to throw it down in a shower as each paddle in turn reaches the upper point in its revolution. A current of hot air is drawn through the drum in a direction counter to the travel of the sugar. The air enters at about 180° F. and leaves at about 130° F., while the sugar remains in the drum about twenty minutes. The heating surface consists of an external system of steam-heated pipes, an allowance of 75 sq. ft. per ton-sugar-hour being usually found. These dryers are often made in pairs, the second one dispensing with hot air but being provided with an interior steam-heated drum. Sometimes the drum and hot-air system are combined in one unit, but in this combination there is a tendency for wet sugar to cake on the drum. Quite irrationally this apparatus is frequently called a granulator.

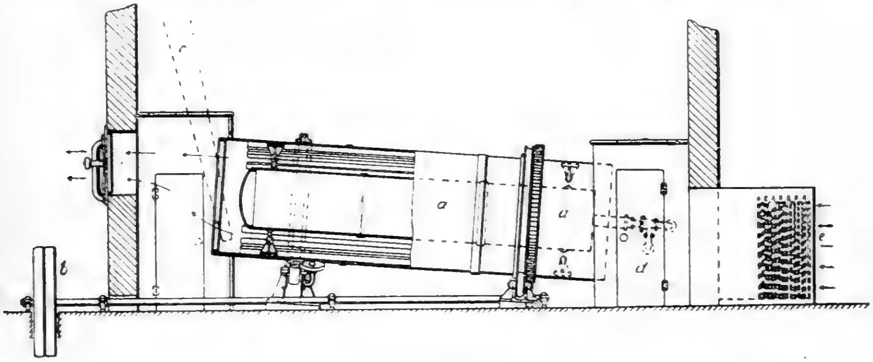

Fig. 272

In some houses it is not unusual to use simpler means for removing some part of the water. These means may take the place of one or more tables caused to rotate rapidly in a horizontal plane. These are arranged in the bin in which the sugar is discharged, and by the exposure of a large area permit of the removal of some of the water. In Java it was, and perhaps still is, the custom to dry the sugar by exposure on the flat roofs of the factories.

Drying of sugars, though of great benefit to the producer of raw sugar, is but little practised. The advantages to the latter are discussed in detail in a following section. To these benefits must be added the protection afforded against deterioration, since it has been conclusively shown that a concentrated film of molasses forms a medium in which the activity of micro-organisms is suspended.

The Deterioration of Raw Sugar.—Raw sugar when kept under certain conditions loses in polarization. This process, which annually causes the loss of large sums of money, is known as "deterioration." Possibly the earliest reference to this matter is due to Ligon,[1] (1673), who writes:—"Sugar should be kept drie in good casks, that no wet or moist aire enter." It is now definitely established that the deterioration of sugar in storage is due to the action of micro-organisms combined with conditions suitable for their growth. The first observation connecting cause and effect is due to van Dijk and van Beek,[2] who in 1829 published the results of an investigation on the cause of the blackening of loaf sugar in an Amsterdam refinery. They determined the cause as due to the presence of a mould *Conferva mucoroides,* and the source of infection as the troughs in which the implements were washed. Later, Payen[3] examined a similar phenomenon in a Paris refinery, identifying as the cause moulds described as *Glyciphila erythrospora* and *G. elæospora.*

As regards the deterioration of raw sugar in bulk, Dubrunfaut[4] in 1869 identified micro-organisms as the cause, ascribing the damage to the lactic ferment. He was followed by Gayon[5] in 1880, who observed yeasts, torulæ and moulds in deteriorating West Indian sugars, and who also isolated therefrom an invertase.

In the cane sugar industry proper, the first observation is that of Maxwell,[6] who in 1896 in Louisiana ascribed the damage to the lactic and butyric acid ferments.

Shorey[7] in 1898 in Hawaii found evidence that the damage was due to a species of *Penicillium,* and attributed the infection to the air drawn through the sugar in the centrifugals.

Kammerling[8] in 1899 in Java, in a study of the flora of Javan sugars, found *Penicillium, Aspergillus, Sterigmatocystis, Citromyces* and also *Monilia* and *Torulæ.* He believed that the bags were the source of infection, that the hyphomycetæ or moulds caused the initial damage, torulæ and monilia becoming active only after the sugars had absorbed water.

Greig-Smith and Steele[9] in 1903 in Australia found one dominant organism in sugars of cosmopolitan origin, and to this they gave the name *Bacillus levaniformans.*

Lewton-Brain and Deerr[10] in 1907 in Hawaii isolated from Hawaiian sugars five species of bacteria, all of which were capable of causing deterioration in sugars under favourable conditions.

Owen[11] in 1911 in Louisiana isolated from sugars a number of bacteria which he identified as belonging to the Mesentericus group. In particular, he found *B. mesentericus, B. mesentericus ruber* and *B. vulgatus.*

Browne,[12] in examining Cuban sugars in New York in 1918, found that the commonest micro-organisms present were a torula, two species of monilia and a bacterium. *Penicillium* and *Oidium* were also present. Owen,[13] in later work, found, as well as bacteria, yeasts and moulds, the identified forms being all *Aspergillus,* one of which was superficially similar to *Penicillium glaucum.*

In the beet sugar industry, similar observations have been made, mainly by Lexa[14] and by Schöne,[15] who have found the same classes of organisms as those mentioned above.

The foregoing observations of different investigators are not contradictory amongst each other ; the absence of torulæ from one set of deteriorating sugars where bacteria were present does not imply that torulæ are not an active agent in the deterioration of other sugars. In addition, all these experimenters have shown by carefully controlled experiments that each and all of the micro-organisms mentioned can and do cause damage under favourable conditions. At one time, however, following on the opinions of Greig-Smith, Lewton-Brain, Deerr, and the earlier work of Owen, there was a tendency to ascribe the damage almost exclusively to bacteria, and their position still remains one of great interest. As shown by Owen, all the forms observed belong to the group known by the earlier bacteriologists as the "potato bacilli," or those forms that appear spontaneously on slices of potato left exposed to a damp atmosphere. These bacteria are of wide distribution and in the economy of nature are concerned with the destruction of organic matter. Their natural habitat is the soil, and they are capable of living on media very deficient in nitrogen. They are thermophilous, and many species produce large quantities of gums and slime. They are continually being introduced into the factory along with the cane. The torulæ and the moulds are also of wide and frequent distribution. Their presence in the factory is probably due to air-borne infection, though torulæ can also be found on the rind of the cane. Owen's later work, however (with which that of Browne and of Kopeloff,[16] who very recently has devoted great attention to the moulds, is concordant), attributes the damage chiefly to moulds. He shows that Aspergillus secretes an enzyme of great inverting power; that it is capable of functioning in greater concentration than either yeasts or bacteria, and that it is less susceptible to alkalinity and acidity than are the other two forms. He believes that the inversion of the cane sugar is due mainly to the moulds, which also destroy the reducing sugars thus formed, this action taking place in even the drier sugars. The yeasts, after some absorption of water, ferment the reducing sugars originally present and those formed by the moulds, but have but little invertive action. Finally the bacteria come into activity only when the sugars have absorbed more water still. His conclusions therefore tend to confirm the earlier observations of Shorey and of Kammerling.

The factors which influence the growth of all of these organisms are mainly temperature, and the concentration of the film of molasses that forms their habitat. Generally the optimum temperature for the growth of micro-organisms is from 35° to 40° C., and Arrhenius[17] in particular has shown that the rate of change produced by micro-organisms follows the same dynamical laws as do "chemical reactions." In this connection Browne has shown that deterioration is almost inhibited at 20° C., and becomes noticeable as the temperature rises. Micro-organisms generally, though there are some exceptions, are unable to develop in very concentrated solutions, due to the phenomenon known as plasmolysis, and therefore a supersaturated film of molasses will act to some degree as a preventive of deterioration. Browne[12] observed that certain Moniliæ which he isolated from Cuban sugars were active in concentrations up to 64° Brix, whilst on the other hand a bacterium he studied was inactive at this concentration. Previously Ashby[18] had isolated a yeast from a Jamaican molasses that was active up to a concentration of 80° Brix, and Owen observed that while the bacteria he studied were inactive at 60° Brix, Tortulæ were still active at 64° Brix, and moulds at 69° Brix.

In their study of Hawaiian sugars, Deerr and Norris[19] found that 96 test sugars did not deteriorate on storage when the percentage of water did not rise above 1 per cent.; this was found to be the case, however much the sugars were infected artificially. This limit is evidently connected with the quantity of molasses adhering to the crystal and with the water in the molasses, and is not to be considered as an absolute limit. If, in the sugar they examined, the quantity of adhering molasses were halved and the percentage of water in the molasses doubled, the water in the sugar would remain the same, but the film of molasses would now form a very suitable habitat for the growth of bacteria. Similarly, a sugar of lower grade containing much more molasses will have a much greater percentage of water while still maintaining so concentrated a solution that micro-organic activity is inhibited. These conditions have been combined into a "factor of safety," due to the Colonial Sugar Refining Co. of Australia. This may be expressed :

When $\frac{\text{water}}{100-\text{pol.}} < 0{\cdot}333$, the sugar will not deteriorate. This factor has been critically examined by Browne,[12] who, in one series found that sugars with a factor lying between 0·313 and 0·346 deteriorated, while others with a factor lying between 0·253 and 0·289 did not deteriorate. The exact value of the factor is evidently connected with the concentration at which activity begins, and a different factor will obtain dependent on whether the organisms present are bacteria, yeasts, or moulds. Another point developed by Browne[12] is that when sugars deteriorate in a sealed container the factor must decrease until the safety point is reached, and experimentally he has found that this is the case. A cessation of activity may also be due to a toxic action exerted by the products of decomposition. In warehouses, however, conditions are different and the decomposition products are free to escape and the sugars may absorb water.

The prevention of deterioration is based on the following points :—

1. One class of organisms to which deterioration is due enters with the cane. These organisms are not destroyed in the ordinary process of manufacture. The temperature and period of exposure in a pre-evaporator as usually operated is, however, just sufficient to cause their destruction. Thus Deerr[20] found that certain very destructive bacteria common in Hawaiian sugars were destroyed by 20 minutes' exposure at 110° C., in 10 minutes at 115° C., and almost instantaneously at 125° C.

2. Avoid washing in the centrifugals in order not to dilute the film of molasses, but, if washing is necessary, use aseptic water. Every factory has a surplus supply of condensed water which is organically pure.

3. Concentrate the film of molasses by passing the sugar through a dryer. As generally operated, the temperature and period of exposure, while not sufficient to give a sterile sugar, will concentrate the film so that the safety limit is reached. Also, as Owen has shown, the dangerous Aspergillus is very largely destroyed in the process.

4. Avoid processes which tend to form hygroscopic substances in the juice. Such are the use of an excess of lime, especially in the presence of much reducing sugar, whereby hygroscopic lime-glucose decomposition bodies are formed.

5. Produce large-grained sugars, since in these the surface area is a minimum and the water absorbed in wet weather is consequently small.

6. Construct tight warehouses and open the doors only in dry weather. Provide means for ventilation in the warehouses so that the temperature may be controlled. Raise the floor of the warehouse two or three feet above the ground level, and keep the surroundings well drained.

7. If a cooling tower or distillery is operated, place these to leeward of the factory so as to avoid air-borne infection of the sugars and juice.

8. Keep all containers and the whole factory as clean as possible, preventing not only infection but also the evolution of a virulent strain of organisms, since Owen[13] has shown that this occurs when the forms responsible have a continuous habitat. Aseptic conditions should be particularly maintained at and near the centrifugals, since Kopeloff[16] has shown that generally the floors and immediate surroundings are foci of infection, whence the organisms can be drawn into the centrifugal basket by a current of air, as was first suggested by Shorey.[7]

9. If it were possible to do so, cold storage below 20° C. would eliminate destruction due to micro-organisms. Conversely in Java, when during the Great War large quantities of sugar were stored, the warehouses were kept as hot as possible, with the object of drying the sugars and concentrating the film of molasses.

In the great majority of cases where sugars are attacked by micro-organisms a fall in polarization occurs. Exceptionally, instances are found where a rise in polarization results. This phenomenon is due to a selective action of the micro-organisms towards reducing sugars, the cane sugar itself not being attacked. This observation was first made by Watts and Tempany,[21] and has also been observed by Deerr and Norris,[19] and by Browne.[12] The last-named has suggested that the occasional appearance of a sugar with a sucrose content lower than the polarization may be due to the destruction of the fructose due to a selective action of certain micro-organisms.

The Valuation of Raw Sugars.—In the American market raw sugars are valued on a polarimeter test alone, the basis being a direct polarization of 96°. The value to the refiner is, however, also governed by the physical characteristics and by the purity, as is discussed in other sections. In other countries other methods of valuation are in use, and include special methods of analysis, which are briefly indicated in this section.

In 1863 Monnier[22] introduced a method for the valuation of sugars based on the supposition that the quantity of sugar retained in the molasses was proportional to the ash content of the sugars. In his method a sugar was estimated to yield the polarization less five times the ash content, and included in this formula are all the mechanical and other sources of loss. This formula was accepted as a basis of sale between refiners and producers. At various times other formulæ have been in use. Thus one due to Pagnoul[23] deducted four times the ash, twice the reducing sugars and allowed a manufacturing loss of 1·5 per cent. Another formula deducted five times the ash and the reducing sugars. Scheibler[23] proposed to obtain the rendement by deducting four times the organic non-sugar, but this proposal was never adopted.

Stammer and Weiler[23] were the first to propose the use of the total non-sugar, and at present in Germany sugars are valued on the basis of polarization less 2·25 times the non-sugar. It is evident that this is the same as a sale on a purity basis with a purity in the molasses of $1 \div (2 \cdot 25 + 1)$ or 30·8, and neglects the specific effect of the various substances present in the non-sugar. These formulæ should be read in connection with Geerligs' theory of molasses formation (*see* Chapter XXII). The purchase of sugars on a purity basis is discussed in a subsequent section.

The second method determines the actual crystal content of a raw sugar, and all these methods descend from the process proposed by Payen in 1846. A summary of these methods is appended.

Payen's Method.[24]—The raw sugar is washed free from the adhering molasses with a saturated solution of sugar in 88 per cent. alcohol, containing also 50 c.c. acetic acid per litre. After the removal of the molasses, the remaining crystals are dried, the loss in weight giving data to calculate the quantity of adhering wash liquor, after which the weight of crystals can be calculated.

Scheibler's Method.[25]—Four solutions are used. (1) 85 per cent. alcohol saturated with sugar and containing 50 c.c. of acetic acid per litre. (2) 92 per cent. alcohol as in (1). (3) 96 per cent. alcohol as in (1). (4) Two volumes of absolute alcohol and 1 volume of ether. The raw sugar is washed with solutions 4, 3, 2, 1, in the order named, the washing with (1) being continued until the washings are colourless. The process is then reversed, and the purified crystals are washed with solutions 2, 3, 4, in the order named, so as to remove the adhering wash liquor. Finally, the residue of pure crystals is brought into solution and polarized.

Koydl's Method.[26]—Five solutions are used. (1) 82 per cent. alcohol with 50 c.c. acetic acid per litre. (2) 85 per cent. alcohol with 25 c.c. acetic acid per litre. (3) 91 per cent. alcohol. (4) 96 per cent. alcohol. (5) Absolute alcohol. Solutions 1 to 4 are saturated with sugar. In making the determination 50 grams of the sugar are washed on a weighed filter paper with 250 c.c. of solution (1), followed by washings with 50 c.c. each of solutions 2, 3, and 4, and finally by 100 c.c. of 5. The residue of crystals is then dried to constant weight.

Herzfeld-Zimmermann Method.[27]—In this process the raw sugar is washed with a solution of sugar saturated at the temperature of observation. After removal of the adhering molasses, the major portion of the wash liquor is removed by centrifugalling, the residue is weighed and finally dried to constant weight, whence is calculated the weight of crystals when the proportion of sugar to water in the wash liquor is known.

All these methods assume that the crystals in a raw sugar represent the refined sugar capable of extraction. If the adhering molasses is not exhausted, some sugar is capable of being obtained therefrom ; and, accordingly, sugars of the same crystal content need not necessarily have the same refining value. The methods would also be inapplicable to sugars boiled on seed grain.

The Refiner and the Producer.—In the following section is given an algebraical representation of the relations between refiner and producer, considered from the financial standpoint.

The Amount of Raw Sugar obtainable from a Given Juice as determined by its Composition.—If s, j, and m have the significance given to them in Chapter XXVII, then, per unit of sucrose in the raw juice, the sucrose in a raw sugar of purity s obtained from a juice of purity j, affording waste molasses of purity m, is given by the expression $\frac{s\,(j - m)}{j\,(s - m)}$.

If s changes to s_1 the sucrose obtained is $\frac{s_1\,(j - m)}{j\,(s_1 - m)}$.

Whence it follows that :—

$$\frac{\text{Sucrose in sugar of } s_1 \text{ purity}}{\text{Sucrose in sugar of } s \text{ purity}} = \frac{s_1\,(j - m)}{j\,(s_1 - m)} \times \frac{j\,(s - m)}{s\,(j - m)} = \frac{s_1\,(s - m)}{s\,(s_1 - m)}.$$

That is to say, the relative quantities of sucrose obtained in raw sugars of different purities depend only on the purity of the sugar and not on the purity of the juice whence they are obtained.

Now let a definite value be given to m, say, 0·40 as typical of the gravity purity of well-exhausted molasses; then, if s be put equal to 1 (i.e., let the product be pure sugar) the value of the expression $\frac{s_1\,(1 - m)}{s_1 - m}$ gives the sucrose in a raw sugar of s_1 purity compared with what will be obtained when pure sugar of 100 purity is made.

In the table below are calculated values of the expression for values of s_1 from 0·94 to 0·99.

Values of $\frac{s_1\,(1 - m)}{s_1 - m}$ for m = 40, or Sucrose in Sugars of 94 to 99 Purity compared with Sucrose in Sugar at 100 Purity.

s_1	$\frac{s_1\,(1 - m)}{s_1 - m}$	s_1	$\frac{s_1\,(1 - m)}{s_1 - m}$	s_1	$\frac{s_1\,(1 - m)}{s_1 - m}$
94·0	1·0444	95·7	1·0309	97·4	1·0181
94·1	1·0436	95·8	1·0301	97·5	1·0174
94·2	1·0428	95·9	1·0293	97·6	1·0167
94·3	1·0420	96·0	1·0286	97·7	1·0160
94·4	1·0412	96·1	1·0278	97·8	1·0153
94·5	1·0404	96·2	1·0270	97·9	1·0146
94·6	1·0395	96·3	1·0263	98·0	1·0138
94·7	1·0387	96·4	1·0255	98·1	1·0131
94·8	1·0379	96·5	1·0247	98·2	1·0124
94·9	1·0372	96·6	1·0240	98·3	1·0117
95·0	1·0364	96·7	1·0233	98·4	1·0110
95·1	1·0356	96·8	1·0225	98·5	1·0103
95·2	1·0348	96·9	1·0218	98·6	1·0096
95·3	1·0340	97·0	1·0210	98·7	1·0089
95·4	1·0332	97·1	1·0203	98·8	1·0082
95·5	1·0324	97·2	1·0196	98·9	1·0075
95·6	1·0316	97·3	1·0188	99·0	1·0068

The table may also be used to obtain the relative quantity of sucrose in raw sugars of different purity. Thus the sucrose contained in a raw sugar of 96·5 purity compared with that in a raw sugar of 97·4 purity is as 1·0247 ÷ 1·0181 = 1·0065. As a commercial basis of comparison, however, it is the actual weight of raw sugar which is required, and to obtain this comparison it is necessary to divide the values given in the above table by the sucrose in the product, pure sugar being taken as 1. Thus, in the example given above, if the sugar of 96·5 purity contains 95·8 per cent. sucrose, the weight of raw sugar compared with the weight of pure sucrose will be 1·0247 ÷ 0·958 = 1·0696, and if the sugar of 97·4 purity contain 96·1 per cent. sucrose, its relative weight will be 1·0181 ÷ 0·961 = 1·0594. The relative weights of the two raw sugars will be as 1·0696 : 1·0594 = 1·0097 : 1·0000.

To complete the argument developed above it may be also shown that the quantity of refined sugar that can be obtained from a juice is constant and independent of the number of operations and also independent of the purity of a raw sugar obtained as an intermediate product:—If raw sugar is made of purity s the quantity of sucrose contained therein is $\frac{s(j-m)}{j(s-m)}$. If this raw sugar is refined, per unit of sucrose present there is obtained $\frac{s-m}{s(1-m)}$ and per unit of sucrose in the original juice $\frac{s(j-m)}{j(s-m)} \times \frac{s-m}{s(1-m)} = \frac{j-m}{j(1-m)}$ and the same result will follow when s changes to s_1 or any other value. This is also the same quantity of sugar that will be obtained if pure sugar is made directly from the juice. The argument given above assumes that the molasses obtained by the producer and the refiner are of the same purity.

The Value of the Crop to the Producer and the Conditions of Sale.—Since for every percentage of sucrose and for every purity there is produced a different weight of raw sugar, the money received by the producer will vary for every case. This variation is also controlled by the conditions of sale. The basis of sale at present obtaining in the United States markets is:—The price quoted refers to sugar of 96° polarization; for each 1° above this standard the sugar receives a bonus of 1/32 cent per lb. and for each 1° below a fine of 1/16 cent per lb. is imposed. The fine and bonus are independent of the market price, whether 2 cts., 3 cts., 4 cts., etc., whereas it is evident that both fine and bonus should be in proportion to the price. Hence a fine or bonus just at one price must necessarily be unfair at another. These figures also only refer to the limits of 94° and 98° polarization, sugars above the latter figure receiving no extra bonus and sugars below the former being only sold on special terms. The basis of sale is also faulty in that it does not take into consideration the purity of the product on which, equally with the polarization or percentage of sugar, the yield is controlled.

Taking as a first approximation that the value of the sugar is proportional to the polarization, it is easy to see that 1/32 cent or 0·03125 cent per lb. per 1° fairly well represents the increased value when sugar is at 3 cents, and that at 2 cents the producer is benefited, the buyer losing with sugar at 4 cents. Similarly, a mental calculation will show that the buyer gains in all cases when sugar is fined 1/16 cent or 0·0625 cent per 1° below 96 test. The question is, however, more complicated than this and may be treated thus:—In the previous section it was shown that the relative quantity of raw sugar produced is given by the expression $\frac{s(1-m)}{s-m} \times \frac{100}{p}$ where p is the percentage of sucrose in the raw sugar. With sugar quoted at c cents per pound the sugar will sell for

$$\left\{\frac{s(1-m)}{s-m} \times \frac{100}{p}\right\} \times \left\{c + (p - 96) \times 0\cdot03125\right\} \text{ cents, or for}$$

$$\left\{\frac{s(1-m)}{s-m} \times \frac{100}{p}\right\} \times \left\{c - (96 - p) \times 0\cdot0625\right\} \text{ cents.}$$

The net income received by the producer will be this quantity less the expenses of containers, handling, railway, shipping, and port and dock dues. These may be expressed as a lineal function of the weight of the product, so that the nett sum received by the producer is either

$$\left\{\frac{s\,(1-m)}{s-m}\times\frac{100}{p}\right\}\times\left\{c+(p-96)\times 0\cdot 03125\right\}-k\left\{\frac{s\,(1-m)}{s-m}\times\frac{100}{p}\right\}$$

cents or

$$\left\{\frac{s\,(1-m)}{s-m}\times\frac{100}{p}\right\}\times\left\{c-(96-p)\times 0\cdot 0625\right\}-k\left\{\frac{s\,(1-m)}{s-m}\times\frac{100}{p}\right\}$$

cents where k is a constant.

It should be the object of the producer to produce that quality of raw sugar which will afford him the maximum of profit. In nearly every case the maximum will be found when both p and s are 96°. That is to say, when he makes an absolutely dry 96 test sugar.

The natures of the equations given above are not such that they can be solved for a maximum value, and it will be necessary to construct tables for each and every factory with its particular conditions. As showing how the sum received by the producer may vary, one series of calculations is appended for sugar quoted at 3 cents, cost of containers, freight charges, etc., being $6·00 per ton.

Per cent. Sugar in Raw Sugar.	Purity of Raw Sugar.	Relative Weight in tons.	Selling Price per ton. $	Gross Returns $	Expenses at $6.00 per ton.	Nett Returns. $
94·0	94·5	11,068	57·5000	636,410	66,408	570,002
94·0	95·0	11,025	57·5000	634,937	66,150	568,787
94·0	95·5	10,993	57·5000	622,079	65,958	556,139
94·5	95·0	10,967	58·1250	637,478	65,802	571,676
94·5	95·5	10,925	58·1250	635,014	65,550	509,464
94·5	96·0	10,884	58·1250	632,632	65,304	567,328
95·0	95·5	10,867	58·7500	638,436	65,202	573,234
95·0	96·0	10,827	58·7500	636,086	64,962	571,124
95·0	96·5	10,786	58·7500	633,677	64,716	568,961
95·5	96·0	10,781	59·3750	640,102	64.686	575.416
95·5	96·5	10,740	59·3750	637,688	64,440	573,248
95·5	97·0	10,691	59·3750	634,777	64,146	570,631
96·0	96·5	10,674	60·0000	640.440	64,044	576,396
96·0	97·0	10,635	60·0000	638,100	63,810	574,290
96·0	97·5	10,597	60·0000	635,820	63,582	572,238
96·5	97·0	10,580	60·3125	638,106	63,480	574,626
96·5	97·5	10,543	60·3125	635,879	63,258	572,621
96·5	98·0	10,506	60·3125	633,643	63,036	570,607
97·0	97·5	10,488	60·6250	635,824	62,928	572,896
97·0	98·0	10,452	60·6250	633,652	62,912	570,940
97·0	98·5	10,417	60·6250	631,530	62,502	569,028
97·5	98·0	10,398	60·9375	633,629	62,388	571,241
97 5	98·5	10,362	60·9375	631,433	62,172	569,261
97·5	99·0	10,326	60·9375	629,240	61,956	567,264
98·0	98·5	10,309	61·2500	631,426	61,854	569,572
98·0	99·0	10,273	61·2500	629,221	61,638	567,583

A Basis for the Valuation and Sale of Raw Sugars.—If p be the sucrose in a raw sugar of purity j, affording a barrel syrup of purity m, the available sucrose is $p \times \frac{j-m}{j(1-m)}$. There is also produced barrel syrup, the quantity of *dry* barrel syrup being $p \times \frac{1-j}{j(1-m)}$. Let the value of a unit of dry barrel syrup compared with a unit of refined sugar be k. Then the equivalent available sucrose is $p \times \frac{j-m}{j(1-m)} + kp \times \frac{1-j}{j(1-m)}$.

Let c cents per lb. be the price quoted for refined sugar; then the value of raw sugar will be in cents per lb.

$$c\left\{p + \frac{j-m}{j(1-m)} + kp \times \frac{1-j}{j(1-m)}\right\} - l = cp\left\{\frac{j-m+k(1-j)}{j(1-m)}\right\} - l$$

where l represents the sum of the refiner's expenses and profits.

If $k = 1$, the left-hand part of the expression reduces to $c \times \frac{p}{j} = c \times$ Dry Substance, in which case the refiner buys dry substance and not sugar. The refiner's expenses will, however, increase as the purity falls, and therefore another term should be added to the expression. This term would be of the form $\frac{q}{f(j)}$, where q is a constant and $f(j)$ represents the increased expenses due to fall in purity, so that the complete expression for the logical valuation of raw sugars will be $cp\left\{\frac{j-m+k(1-j)}{j(1-m)}\right\} - l - \frac{q}{f(j)}$.

A basis of sale such as the above would be fair to both producer and refiner, and would allow the former to make sugars of low water content, thus eliminating danger of deterioration and permitting him to economize in expense of containers and freight. The refiner similarly would pay for what he receives, including the barrel syrup. If the sale is conducted on a basis of available sucrose only, the expression will be $cp\left\{\frac{j-m}{j(1-m)}\right\} - l - \frac{q}{f(j)}$.

REFERENCES IN CHAPTER XXI.

1. "History of the Island of Barbados," London, 1673.
2. "Nieuwe Verhandelingen . . . . . van het Koninklijk Nederlandsche Instituut," 1829, 2, 161; 1830, 3, 271.
3. *C.R.*, 1851, 33, 393.
4. *C.R.*, 1869, 68, 663.
5. *C.R.*, 1880, 91, 993.
6. *La. Plant.*, 1896, 154.
7. *Jour. Soc. Chem. Ind.*, 1898, 13, 535.
8. *Java Arch.*, 1899, 7, 629.
9. *Int. Sug. Jour.*, 1902, 4, 45.
10. H.S.P.A. Ex. Sta., Path. Ser., Bull. 9.

11. La. Ex. Sta., Bull. 125.
12. *Jour. Ind. Eng. Chem.*, 1918, 10, 3.
13. La. Ex. Sta., Bull. 162.
14. *Deut. Zuck.*, 1901, 26, 453 ; 1904, 29, 1,000.
15. *Zeit. Zuck. Böh.*, 1904, 29, 423.
16. La. Ex. Sta., Bull. 166.
17. "Quantitative Laws of Biological Chemistry," London, 1915.
18. *Int. Sug. Jour.*, 1909, 11, 343.
19. H.S.P.A. Ex. Sta., Agric. Ser., Bull. 24.
20. H.S.P.A. Ex. Sta., Agric. Ser., Bull. 36.
21. *W. Ind. Bull.*, 1905, 7, 226.
22. "Guide pour l'essai et l'analyse du Sucre, Paris," 1864.
23. "Technical Calculations for Sugar Works," New York, 1910.
24. *Moniteur Scientifique*, 1846.
25. *Zeit. Ver. deut. Zuck.*, 23, 407.
26. *Oes-Ungar. Zeit. Zuck.*, 44, 877.
27. *Zeit. Ver. deut. Zuck.*, 62, 166.

CHAPTER XXII

MOLASSES

MOLASSES is the material from which sugar has been removed in the course of manufacture. The terms "first molasses," "second molasses," etc., thus result, though generally molasses without any qualification refers to the final product from which it is not possible or convenient to extract any more sugar; the terms "final," "exhausted," "waste," and "refuse" are, however, used to specify this by-product. In French practice "mélasse" refers to the final product, the terms "sirop" or "égout" being used for the intermediate materials. The term molasses does not occur in refinery practice, "barrel syrup" being the phrase used. In Louisiana the term "black strap" is employed to specify the product obtained when making 96 test crystals for refining purposes, "table syrup" being used when the molasses are intended for consumption, as obtained when making yellow sugars.

Since molasses is a residue obtained by the continual removal of sugar, it at once follows that the composition of the molasses is determined by the composition of the juice, modified by such changes as occur in the process of manufacture. Thus, the same relative proportions of reducing sugars and non-sugars must occur in the molasses as are present in the juice, except in so far as reducing sugars are destroyed or non-sugars are removed independently of concurrent removal with raw sugar.

Very detailed analyses of waste molasses have been made by Geerligs,[1] as they occur in Javan factories, and others in less detail of Hawaiian molasses have been made by Peck and Deerr.[2] From these analyses a number of typical results have been selected and are given in the annexed schedules, wherein will be found examples covering the extreme variations ever likely to occur. Comparing the results, the higher percentage of ash in the Hawaiian molasses is to be noted, together with instances of a very low content in reducing sugars; these examples are afforded by juices from very ripe irrigated Lahaina cane, which often contains only 0·2 to 0·3 per cent. of reducing sugars. The low optical activity of the reducing sugars in carbonation molasses is to be noted,* and in this material the activity is positive as often as negative.

---

* This peculiarity is not confined to molasses from carbonation factories. Demerara molasses frequently exhibit it. Two samples analysed by Peck and Deerr gave 36.5 and 35.0 polarization, and 38.3 and 34.9. sugar per cent.

COMPOSITION OF JAVAN MOLASSES. (GEERLIGS.

									*	*
Brix.	87·4	87·1	87·4	84·7	87·7	81·8	91·2	79·2	81·8	83·2
Dry substance per cent.	82·5	82·3	83·6	77·4	80·7	75·9	85·3	74·0	77·6	76·7
Polarization	32·8	27·4	26·0	27·6	26·2	25·6	31·8	31·8	28·6	33·8
Sugar per cent.	36·5	32·5	32·3	33·8	33·1	33·3	37·2	34·7	28·1	34·1
Reducing sugars per cent.	23·2	29·4	27·0	24·4	22·7	20·0	21·3	16·1	25·0	15·4
Organic non-sugars per cent.	10·6	12·7	15·7	9·9	13·5	14·3	16·8	14·8	17·0	18·0
Gums per cent.	1·7	1·1	1·7	2·5	2·1	1·8	2·6	4·0	0·6	0·6
Ash per cent.	8·0	7·7	7·6	9·2	11·4	8·3	10·0	8·4	7·4	9·0
Insoluble ash per cent.	1·9	1·6	1·4	1·5	1·5	1·4	1·2	2·4	2·3	3·9
Soluble ash per cent.	6·1	6·1	6·2	7·7	9·8	7·0	5·1	6·0	5·1	5·3
Lime per cent.	0·7	0·5	0·1	0·2	0·3	0·2	0·4	0·7	1·2	2·1
Potash per cent.	3·6	3·6	4·2	4·7	6·0	4·2	3·1	3·7	3·3	2·5
Sulphuric acid per cent.	1·3	1·1	0·9	0·8	0·8	0·9	0·3	0·3	0·3	0·4
Chlorine per cent.	0·4	0·3	0·3	0·7	0·8	0·6	0·3	0·3	0·2	0·6
Absolute purity	44·3	39·5	38·6	43·7	41·2	43·8	43·6	46·9	36·1	44·5
$\frac{\text{Polarization} \times 100}{\text{Brix}}$	37·5	31·4	29·7	32·6	29·9	31·3	34·9	40·0	34·9	40·6

COMPOSITION OF HAWAIIAN MOLASSES. (PECK AND DEERR.)

Brix	86·0	81·4	89·9	86·5	87·9	93·9	91·2	93·5	84·9	84·6
Dry substance per cent.	81·8	79·6	85·0	83·3	82·5	86·0	84·1	84·5	82·7	79·9
Polarization	27·5	35·5	27·5	28·0	28·8	32·5	38·0	32·5	23·5	31·0
Sugar per cent.	31·7	36·9	31·9	33·3	35·0	38·1	49·3	35·2	30·4	34·6
Reducing sugars per cent.	21·0	12·2	26·8	24·3	18·4	9·1	5·9	12·6	23·7	12·9
Ash per cent.†	10·4	10·9	10·1	10·3	9·4	11·8	12·8	15·9	6·7	10·8
Nitrogen per cent.	0·3	0·3	0·3	0·2	0·4	0·6	1·0	0·6	0·6	0·5
Chlorine per cent.	2·5	2·1	1·9	2·0	2·7	2·6	3·0	3·0	0·8	2·5
Absolute purity	38·7	46·3	37·5	39·9	42·5	44·3	47·9	41·7	36·8	43·3
$\frac{\text{Polarization} \times 100}{\text{Brix}}$	32·0	43·6	30·6	32·4	32·7	34·6	41·7	34·7	27·7	36·6

Since the reducing sugars and the non-sugars in a juice must occur in the molasses in the same relative proportions, the question at once arises as to what is the effect, if any, of these bodies on the quantity of sugar that remains in the molasses. A typical beet sugar molasses formed in the absence of reducing sugars contains about 45 per cent. of sugar, whereas a typical cane molasses contains about 30 per cent., together with about 20 per cent. of reducing sugars. Cane molasses is, however, much more variable in composition than beet molasses, and a casual inspection of a series of analyses will show that generally a high percentage of reducing sugars is accompanied by a lower percentage of cane sugar. From a large number of analyses of molasses made by Geerligs, Peck, Deerr and others, the writer has obtained the average analyses of molasses divided into the following categories as regards the reducing sugars :—Below 14 per cent. ; between 14 and 18 per cent. ; between 18 and 21 per cent. ; between 21 and 24 per cent. ; between 24 and 27 per cent. ; over 27 per cent. The results appear in the annexed table, all being calculated to 80 per cent. dry matter.

---

* Carbonation molasses.

† The potash in Hawaiian molasses is of the order 4 per cent. as in Javan molasses, but the sulphates are often present in a quantity from two to three times as great as in Javan molasses.

AVERAGE COMPOSITION OF MOLASSES AS CORRELATED WITH REDUCING SUGARS PER CENT.

Dry Substance.	Reducing Sugars.	Sugar.	Non-sugars.	Total Sugars.	Absolute Purity.	Reducing Sugars / Non-sugars.
80·0	0·0	45·0*	35·0	45·0	56·2	0·0
80·0	9·8	36·3	33·9	46·1	45·4	0·3
80·0	17·1	37·0	25·9	54·1	46·2	0·7
80·0	20·8	34·7	24·5	55·5	43·4	0·8
80·0	22·1	34·8	23·1	56·9	43·5	0·9
80·0	25·3	32·5	22·2	57·8	40·6	1·1
80·0	28·1	31·5	20·4	59·6	39·4	1·4

On inspection it is at once apparent that there is a tendency for the sugar to decrease as the reducing sugars increase, and that the total sugars present also show a very distinct increase. It follows then that when the composition of a juice is known, an idea can be obtained regarding the probable composition of the molasses that will result. This composition, it is evident, will be determined not by the absolute quantity of reducing sugars in the juice, but by the ratio of reducing sugars to non-sugars; when this ratio is small, as occurs in beet juices and occasionally in cane juices, a molasses of higher purity may be anticipated; in the presence of much reducing sugar a molasses of low purity is obtained.

In routine technical control over nearly all the cane sugar producing districts, a value of the ratio $\frac{100 \times \text{polarization}}{\text{Brix}}$ in the neighbourhood of 30 has come to be regarded as indicative of good work. Probably in the great majority of cases this is so, but it must be remembered that the value of this ratio is governed by the routine followed by the analyst, especially as regards the concentration in which the degree Brix is determined, and the quantity of lead acetate which is used in the analysis. In addition, though the direct polarization is indicative generally of the quantity of sugar in the molasses, the ratio between sugar per cent. and polarization is by no means constant, and it is quite possible to have a molasses of "35 test" contain less sugar than one of "30 test." The determination of sugar as opposed to polarization affords a much more reliable criterion, and on this basis a gravity purity of 40 will generally be found representative of commercially exhausted molasses, those special cases indicated in the foregoing paragraphs being excepted.

There are, of course, many other factors besides the ratio of non-sugars to reducing sugars that determine the purity of the waste molasses, and indeed the statement made above has only an empirical basis. The determining factors have been made the subject of a classical research by Geerligs,[3] whose work is abstracted below. He calls attention first of all to the difference between beet and cane molasses; the higher solubility of sugar in the former he attributes to the formation of a compound between the salts and the sugar, the solubility of which is greater than that of sugar itself, and he defines beet molasses as a hydrated syrupy liquid composed of sugar and salts. In a cane molasses the presence of reducing sugars leads to a similar reducing sugars-salt-water complex which abstracts water which would

---

* Typical beet sugar molasses.

otherwise cause the solution of sugar. The water in the complex appears in analysis, and hence the solubility of the sugar in the water as returned appears lower than the normal solubility in water alone. In place of referring the dominant factor to the reducing sugars/non-sugar ratio, Geerligs considers that the deciding factor is the reducing sugars to ash ratio, or more exactly the alkalinity of the ash as representative of the amount of organic salts present, as it is these that enter largely into the formation of the syrupy compound. The position of the reducing sugars is also discussed by Geerligs. He recalls the older idea that glucose was a molasses-former, and in a series of experiments shows that this idea is ill-founded.* In one series of experiments he dissolved cane sugar in a specially purified honey and allowed the excess of sugar to crystallize out. As indicated in the table below, the effect of the reducing sugars in increasing the solubility of the cane sugar is zero.

EFFECT OF GLUCOSE ON SOLUBILITY OF CANE SUGAR. (GEERLIGS.)

Sucrose crystallized ..	9·3	9·1	10·0	8·9	9·8	9·2	9·0
Sucrose dissolved ..	15·7	15·9	15·0	16·1	15·2	15·8	16·0
Glucose	25·0	12·5	6·0	3·0	1·0	0·5	—
Water	7·5	7·5	7·5	7·5	7·5	7·5	7·5

In another series of experiments he showed that it is possible under certain conditions to " salt " cane sugar out from solutions by the addition of glucose, thus affording experimental evidence in favour of the actual existence of the postulated sugar-salt-water complex.

On the other hand Williams[4] has observed that, if a commercially exhausted molasses be boiled almost dry and then be allowed to stand for some weeks, there is a formation of small impure sugar crystals that can be recovered in centrifugals after " pugging " the mass with a small quantity of cold water. He considers that this observation negatives the existence of the complex demanded by Geerligs' theory, and goes so far as to accuse the water of being the only molasses-former. Some controversy over the matter has resulted, but in the opinion of the writer both observations are consonant with each other. Evidently if all the water is removed the complex must be broken up, and it should be possible by rapid work to separate the sugar crystals before the syrupy compound is formed, since the time element must enter into its formation. In addition it is possible that the molasses used by Williams while being commercially exhausted may not have been absolutely so.

In the early days of research in sugar technology, viscosity as preventing the movement of sugar molecules was considered to be one of the chief factors in molasses formation. Geerligs has shown that eventually even in jellies all the sugar capable of crystallization does so, and accordingly viscosity can only be of influence in determining the time taken for complete crystallization. Technically this influence is not unimportant, and is particularly noticeable in a comparison of the rapidity of crystallization in refineries and in raw sugar houses, material of equal purities (but with the " gums " removed by char filtration) crystallizing much more rapidly in the refinery than in the raw sugar house. The purity of the refinery " barrel syrup " is, however, substantially the same as that of the molasses afforded in the houses where the raw sugar was produced.

---

* All non-sugar is a molasses-former since the water required to keep it in solution will also dissolve sugar. The old idea of positive and negative molasses-formers referred to those bodies which increased and decreased the solubility of the sugar in water. In the former class were included the organic salts of the alkalies, which in Geerligs' theory are responsible for the formation of a very soluble complex.

There is one more point to discuss in regard to molasses, and that is due to Claassen, who paradoxically has called attention to the influence of the sugar itself. He refers to a supersaturation in the mother liquor whereby sugar is kept from crystallizing and molasses of high purities result.* Although loss here easily occurs, such material is due to bad technique and not to the formation of a real molasses.

The position of glucose in Geerligs' theory has led to many misunderstandings. It has been proposed to commercially salt out cane sugar by the addition of glucose, and, though such a scheme might in certain cases result in the separation of cane sugar, there could be no possible prospect for commercial success. On the other hand it has been proposed to ferment the glucose, recover the alcohol, and obtain an enhanced yield from the purified material. One result of this scheme would be to raise the purity of the molasses so that little if any more sugar would be obtained; that this is so can be seen at a glance from the typical analyses of molasses quoted in the beginning of this chapter. Finally, it may be mentioned that the inversion of part of the cane sugar has been proposed as a corollary of Geerligs' theory with the view of obtaining a greater yield. It is hard to see how such a meaning could be read into his results.

The Extraction of Sugar from Molasses.—Although no one of the processes used in beet sugar factories has succeeded in establishing itself in the cane sugar industry, all are of such technical interest as to deserve cursory mention. They fall into three classes; those dependent on the formation of insoluble saccharates, those based on the precipitation of sugar by the addition of fluids in which cane sugar is insoluble, and those based on the application of diffusion phenomena. The initial conception of these processes is mainly due to French chemists, though their development is largely due to Germans.

Saccharate Processes. Cane sugar in combination with various metallic oxides forms insoluble saccharates. Of these bodies, which were first studied by Péligot[5] and Soubeyrau,[6] the following are of technical importance: Monobasic lime saccharate, $CaO\ C_{12}H_{22}O_{11},\ H_2O$: this is soluble in water, and is obtained by mixing molecular proportions of lime and sugar.

Sesquibasic lime saccharate, $3CaO\ 2C_{12}H_{22}O_{11}$: this is obtained by pouring an excess of a milk-of-lime into a dilute sugar solution and evaporating the mixture to dryness.

Bibasic lime saccharate, $2CaO\ C_{12}H_{22}O_{11}$: it is formed by mixing two molecular proportions of lime to one of sugar. It is soluble in 33 parts of cold water.

Tribasic lime saccharate, $3CaO\ C_{12}H_{22}O_{11}$: it is obtained by boiling a solution of the bibasic saccharate.

Bibasic strontium saccharate, $2SrO\ C_{12}H_{22}O_{11}$: it is obtained on mixing two molecular proportions of strontia with one of a hot solution of sugar.

Monobasic strontium saccharate, $SrO\ C_{12}H_{22}O_{11}$: it is formed on cooling the bibasic compound.

Monobasic barium saccharate, $BaO\ C_{12}H_{22}O_{11}$: this is the only barium saccharate known. It is formed as a crystalline precipitate on mixing a hot saturated solution of baryta with a solution of sugar. It dissolves in 41 parts of cold water.

Lead saccharate, $PbO\ C_{12}H_{22}O_{11}$: it is obtained on mixing litharge with a solution of sugar. It is very insoluble in cold water.

---

* *cf.* page 403.

Dubrunfaut[7] was the first technicist to use these processes. He mixed a hot saturated solution of baryta with molasses at 30° Baumé. The resulting saccharate which formed at once was washed with cold water, suspended in water, and decomposed by a current of carbon dioxide. After filtering off the insoluble barium carbonate a liquor of 98° to 99° purity was obtained. A sample of sugar thus made obtained a Council gold medal at the Great Exhibition of 1851. Difficulty in regenerating the barium has prevented the extension of this process, which, however, still remains in limited use.

Following on Dubrunfaut's work, Scheibler, Seyferth and Manoury, all working about 1870, developed the schemes known as *elution* processes. In these, milk-of-lime or dry lime was mixed intimately with undiluted molasses. An impure saccharate resulted, which was purified by washing with alcohol afterwards recovered.

A somewhat similar process is the sucro-carbonate process of Boivin and Loiseau,[9] in which a current of carbon dioxide is passed through a paste obtained on intimately mixing lime and molasses. The sugar is precipitated as a complex lime-sucro-carbonate, which after washing is suspended in water and broken up by further passage of carbon dioxide.

The use of strontia was patented by F. Jünemann Pierre de Rieu in 1866, and it was used in a secret process about this time in Germany. The credit of making the process technically successful is due to Scheibler, who devised two schemes. In the bibasic process[10] three equivalents of strontia to one of sugar are mixed with hot dilute molasses. The saccharate that forms is separated from the mother liquor by filtration and washed with a 10 per cent. solution of strontia. In order to decompose the saccharate it is placed in vessels set up in a battery, through which is passed a 2 per cent. solution of strontia at a temperature of from 4° to 15° C. The bibasic saccharate is decomposed into the monobasic body and strontia, the whole operation taking forty-eight hours. The monobasic saccharate is decomposed by carbonation and the strontia used in the next series. In the monobasic process[11] a solution of strontia is mixed with molasses, the temperature not being allowed to rise above 20° C. The monobasic saccharate which forms is separated by filtration and decomposed by carbonation.

The strontia process due to the Austrian, Steffen, is known as the *substitution* process.[12] The five operations in the cycle of this scheme are :—

1. Formation of a soluble bibasic saccharate in the cold.
2. Transformation of the bibasic saccharate into sugar and insoluble tribasic saccharate by boiling.
3. Separation by filtration of the tribasic saccharate.
4. Regeneration of the mother liquors by the addition of fresh molasses.
5. Periodic reduction of the mother liquors.

In outline the different processes are worked as follows :—

1. Molasses diluted to 11°–12° Brix are mixed with continued agitation with powdered quicklime in the proportion of one part of sugar to one of lime. The mixture is then filtered to remove scums.
2. The filtrate is heated in autoclaves to a temperature of 105°–110° C.
3. The tribasic saccharate formed on heating is filtered, the cakes washed with boiling water, and the saccharate used instead of lime in the treatment of the raw juice.
4. The mother liquors coming from the filtration of the saccharate are used to dilute a further portion of molasses.

5. After a time the mother liquors become too charged with impurities to be returned. They are then treated separately, two operations being sufficient to exhaust them. In all, the mother liquors are returned from 25 to 30 times.

The second process of Steffen[13] is known as *separation*, and this of all the saccharate processes is the one that has survived. Its operation falls into three parts:—

1. Preparation of a very finely divided quicklime.
2. Formation of a tribasic saccharate in the cold.
3. Extraction and purification of the saccharate.

In preparing the lime, a very pure non-siliceous stone is used, which is burned out of contact with the fuel. The burnt lime is brought by some means to a very fine state of division. In the United States, Raymond mills are exclusively employed. These mills separate the fine lime from the residue by means of an air blast.

In the second operation the molasses at a density of 10°–12° Brix is cooled down to a temperature of 5°–6° C., and the powdered quicklime is gradually added to the material until 210 parts of lime per 100 of sugar have been used. During the operation, the molasses is constantly agitated, and its temperature is not allowed to rise above 13° C. At the completion of the process there is obtained a pasty mass consisting of tribasic saccharate and lime. This precipitate is filtered off and washed with cold water, after which the washed cake is used in the treatment of fresh juice. The filtrates contain some sugar, and this is recoverable by boiling when an insoluble saccharate forms, which is recovered by filtration. In some cases the washings are run to waste as not being worth while treating.

The lead saccharate process has been lately developed by Wohl[14] and by Kassner.[15] Molasses mixed with 80 per cent. of water is kneaded with litharge in the proportion of 150 parts lead oxide to 100 of sugar. The pasty saccharate is separated and decomposed as in the other schemes, affording a liquor of 98–99 purity. Difficulty of regenerating the lead and objections to the use of lead in the preparation of an article of food have prevented any extension of this scheme.

Osmosis.[16]—It follows from the above sections that if the salts could be removed from an exhausted molasses, the conditions of solubility of the sugar would be altered and a further portion would be capable of crystallization. About 1850 a method of effecting this was worked out by Dubrunfaut. The principle of his process known as *osmosis* is as follows: If a concentrated solution of any soluble body be separated from a weaker solution or from water by a semi-porous membrane, such as parchment, the two solutions will pass through the membrane until they are of the same concentration. The rate at which this osmosis or diffusion takes place is not the same for all bodies; inorganic salts such as potassium chloride diffuse much faster than sugar; hence if a solution of molasses be separated by a parchment membrane from water, a greater proportion of salts will pass through the membrane in a given time than sugar. An osmogene is an apparatus to effect this separation; it consists of a structure similar to a filter-press, in which are held a series of wooden frames, shown in elevation in *Fig.* 273. Between each frame are placed sheets of parchmentized paper, pierced at the angles to correspond with the apertures shown at A, B, C, D, and at A′, B′, C′, D′, in *Fig.* 273. At *b* and *c* in the one frame, and at *a* and *d* in the other, are small channels establishing communication with the interior of the frame. If, then, water enters at B and molasses at D, the water will flow along the canal formed by the openings B and into the interior of the frames by the channels *b*, and the molasses will similarly flow by way of D and d'. The water will discharge itself along the canal formed by the openings C and *c*, and the molasses along that formed by the openings A' and a'. There is thus a continual flow of molasses and water separated by a sheet of parchment. The water which leaves the apparatus now charged with a proportion of molasses is called water of exosmose, and it contains roughly about half the salts originally present in the molasses. Although this process has been largely used in times past and is still to a certain extent employed in beet sugar factories, it is financially unsuccessful; the large size of the osmogenes required (500 square feet diffusion surface only being sufficient to treat three tons of molasses in twenty-four hours) the extreme dilution of the osmosed molasses, the expense of evaporation, and the small extra yield of sugar, entirely discounting the monetary value of the process.

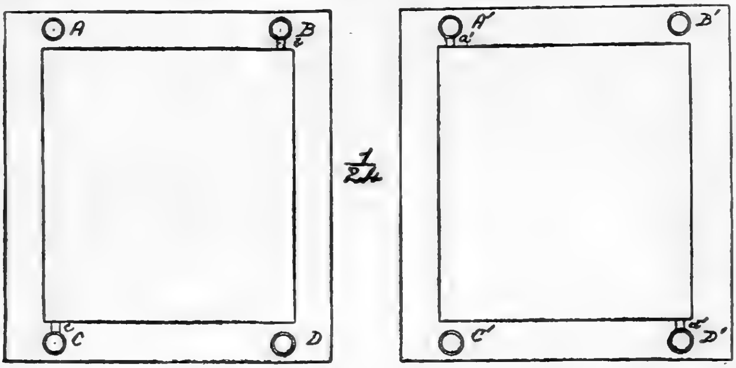

FIG. 273

Precipitation Processes.—In Margueritte's process[17] molasses was first purified from " gums " and a part of the salts and then treated with a large excess of alcohol, which was afterwards recovered.

Glacial acetic acid is another precipitant of sugar; its use has been proposed by Wernicke and Pfitzinger.[18] The writer does not believe that this process has ever been used on the commercial scale.

The Disposal of Molasses. *By sale as such.*—In certain places the sale of molasses to distillers or for direct consumption forms a part of the routine; in some cases, particularly in the muscovado process followed in Barbados, this procedure is very profitable since fancy prices are still to be obtained for these grades of molasses. Considered from the point of view of the agricultural chemist, nothing can be said in favour of this scheme as it entails the absolute removal from the soil of much valuable plant food, particularly in the form of potash. With the very pure juices found in the Hawaiian Islands the molasses amount to about 20 per cent. of the sugar shipped, a figure rising to as much as 40 per cent. in the case of the impure juices found in Demerara, and elsewhere; molasses on an average contains about 4 per cent. of potash, so that the sale of the molasses implies the removal from the soil of from 18 to 36 lbs. potash per ton of sugar shipped.

Sale as Cattle Food.—The sale of molasses as cattle food was originated on the large scale by Mr. G. H. Hughes, in 1902, who observed that the finely divided interior pith of the cane was capable of absorbing large quantities of molasses, affording a product which could be shipped in bags; this product was put on the market under the name of "molascuit."

The manufacture of this article requires plant of a very simple nature, which is generally capable of being placed so as to fit in with existing arrangements. The method of manufacture in a certain West Indian factory is as follows. The bagasse, before the manufacture of molascuit was started, discharged itself from a scraper elevator on to the cross-carrier which conveyed the bagasse in front of the furnaces; a sifter of one-eighth inch mesh and of 8 ft. × 4 ft. dimensions was interposed between the elevator and cross-carrier; the bagasse fell on to this sifter, to which an oscillating motion was given by an eccentric driven off a convenient engine; in the passage of the bagasse along the sifter to the cross-carrier a number of the finer particles fell through and these were directed down a shoot on to the flue wall of the boilers. The brickwork on the top of the flue was replaced by sheet-iron plates and a drying surface obtained for the bagasse; after the latter had been dried it was again sifted through a sifter of mesh one thirty-second of an inch. Refuse molasses was mixed with the doubly sifted bagasse powder in the proportion of seventy parts of molasses to thirty parts of bagasse; the molasses was concentrated to 85° Brix before mixing and a much more even product was obtained when hot molasses was used; before bagging, the molascuit was allowed to cool. The mixing was performed in a "Carter" kneading machine. The double sifting is of importance so as to eliminate the larger particles of bagasse, especially splinters, consisting of the hard and indigestible outer rind. In other installations more elaborate machinery is employed, and in large plants the use of a dryer similar to those used for drying sugar would be advisable both for the bagasse and for the final product. The keeping qualities of the product depend very largely on the extent to which it is dried.

Molasses feeds are not a complete food and are very deficient in proteid, the percentage of nitrogen being only about 0·15 per cent.; hence they require supplementing with other material, especially in the case of working animals. In Mauritius the seeds of an acacia-like shrub, *Lucæna glauca*, are used in combination with molasses, and in Louisiana the ration of molasses is frequently balanced with cotton seed meal. T. U. Walton[18] advises a ration of 15 lbs. of molasses to a 1,270 lb. horse, and states that for working horses this quantity has no undue fattening effect, that the salts in this quantity of molasses are not deleterious, and that sugar is generally an efficient substitute for starch.

The following analyses of molasses feeds are due to Browne[19]:—

	Blood, Cereal, Molasses.	Cotton Seed Meal, Corn, Oats, Molasses.	Corn, Oats, Molasses.	Extracted Rice, Bran, Molasses.	Bagasse, Molasses.
Water	15·38	11·90	12·23	8·40	13·98
Fat	1·11	3·15	2·30	0·83	0·90
Ash	9·52	6·27	7·79	9·70	5·11
Fibre	12·98	14·30	12·78	13·00	5·64
Protein	16·13	12·75	6·41	14·00	1·94
Sugars	15·01	21·65	19·43	5·50	55·94
Other carbohydrates	29·87	29·98	39·06	48·56	16·49

Manufacture of Alcohol.—In the West Indies, Argentina, Peru, Natal and Australia the distillery forms an integral part of the sugar factory and large quantities of a potable spirit known as rum are manufactured. As the sale of alcohol leaves all the fertilizing elements available for their return to the soil, this is perhaps the most rational scheme. Market limitations are, however, a factor that prevent the more extended use of molasses in this way. Eventually, however, a more extended field may be afforded by the growing use of alcohol as fuel and in the arts.

Use as Fuel.—Molasses is occasionally used as fuel in combination with the bagasse. The large amount of ash formed on combustion is, however, a troublesome factor. During the potash shortage in the Great War a number of Hawaiian factories installed special furnaces to both burn the molasses and to recover the potash. The design included a storage tank set in the brickwork of the furnace in which the molasses was sufficiently heated to allow it to flow freely to the hearth, on which it was burnt under a fire-tube boiler. The flues were made of wide cross-section to allow of the deposit of potash carried forward in a volatile form.

Return to Soil.—This method of disposal, which is of all perhaps the most rational, is discussed at length in Chapter V.

REFERENCES IN CHAPTER XXII.

1. "Cane Sugar and its Manufacture," Manchester, 1909.
2. H.S.P.A. Ex. Sta., Agric. Ser., Bull. 28.
3. *S.C.*, 1893, 25, 284; 1896, 28, 311.
4. *Int. Sug. Jour.*, 1917, 19, 218.
5. *Ann. Chim. Phys.*, 67, 113; 73, 103.
6. *Jour. Prak. Chem.*, 26, 468.
7. U.K. patent 656 of 1859.
8. U.K. patent 3865 of 1877.
9. U.K. patent 54 of 1867; 3093 of 1893.
10. U.K. patent 331 of 1881; 398 of 1882.
11. U.K. patent 2239 of 1882.
12. U.K. patent 967 of 1883.
13. U.K. patent 2416 of 1883.
14. U.K. patent 22859 of 1895; 6733 of 1900.
15. U.K. patent 14925 of 1895; 23171 of 1895.
16. U.K. patent 2053 of 1863; 8502 of 1884; 9243 of 1884.
17. U.K. patent 1254 of 1867; 164 of 1869.
18. U.K. patent 1817 of 1882.
19. *Haw. Plant. Mon.*, Sept., 1905.
20. *La. Plant.*, 34, 236.

CHAPTER XXIII

BAGASSE AS FUEL AND THE STEAM GENERATING PLANT OF THE CANE SUGAR FACTORY

In this chapter an account is given of the special points of interest of bagasse* regarded as a fuel, and of the designs of furnaces and boilers used in its combustion.

Composition of Bagasse.—Bagasse consists essentially of crude fibre and water, together with more or less cane sugar and glucose depending on the degree of extraction practised in the mill whence it is derived. In addition there are present ash, organic acids, cane wax, and the other bodies associated with plant life. By the crude fibre is here meant the material insoluble in water. C. A. Browne[1] found as an average that purified cane fibre contained :

	Per cent.
Cellulose (including oxycellulose) $(C_6H_{10}O_5)_n$	55
Xylan $(C_5H_8O_4)_n$	20
Araban $(C_5H_8O_4)_n$	4
Lignin, $C_{24}H_{26}(CH_3)_2O_{10}$	15
Acetic acid, CH_3COOH	6

As bagasse is an indefinite material, it is not possible to give an exact figure for its percentage composition as regards carbon, hydrogen, and oxygen ; but since the crude fibre and sugar of which its solid matter almost entirely consists have nearly the same percentage composition, the variation between dry specimens of bagasse of different origin is not great. As long ago as 1869 Robert Angus Smith[3] gave the ultimate composition of dry bagasse, calculated to ash-free material, as carbon 47·6 per cent., hydrogen 6·2 per cent., and oxygen 45·4 per cent. These results are almost identical with the 46·8 to 48·4 and 6·3 to 6·7 found by Geerligs,[3] and the 47·9 to 48·3 and 5·5 to 5·7 found by Norris.[4]

The ultimate composition of bagasse is influenced to a small extent by the proportion of rind tissue and pith tissue, the former generally containing

---

* Bagasse was the term originally applied in Provence to the refuse from olive oil mills. Hence, as anything worthless, the word was used to describe a disreputable woman, and it appears in English as "baggage." The ultimate root of bagasse may possibly be the same as the Anglo-Saxon *baeg*, referring to the olive skin as a bag. If so, megass coming from bagasse by phonetic change is cognate with belly, which also denotes a bag.

more carbon than the latter. Thus Norris found with Yellow Caledonia cane 48·75 per cent. carbon in the rind fibre and 47·2 per cent. in the pith fibre. So also as between varieties which differ in the proportion of rind and pith tissue differences may be expected, but these differences are not of much moment, and it is justifiable to accept a flat rate for the composition of dry bagasse. Including the ash in certain computations that follow, this will be taken as 46·5 per cent. carbon, 6·5 per cent. hydrogen, and 46·0 per cent. oxygen.

Heat of Combustion of Bagasse.—As dry bagasse of any origin has nearly the same ultimate composition, it would be expected that its heat of combustion would also vary within very narrow limits. That this is so has been definitely proved by the determinations of Geerligs,[3] who found values from 8289 to 8514 B.T.U. per lb. of dry bagasse; of Burwell,[5] 8289 to 8384; of Norris,[5] 8089 to 8344; and of Kerr,[6] 8375. The differences that occur may reasonably be attributed to variation in the proportion of rind tissue and pith tissue. Norris found the former to afford 4 per cent. more heat than the latter, and this difference may also be extended to give the bagasse from one variety a higher value than that from another. In the various computations that follow the heat of combustion of dry bagasse will be uniformly taken as 8350 B.T.U. per lb. This figure is considerably higher than that obtained by calculation from the heats of combustion of the fibre (taken as cellulose) and of the sugars, or as obtained from Welter's rule, which gives the heat of combustion of an organic compound as that of its constituents, less that of such hydrogen present which can be combined with oxygen in the proportions in which they form water.

Products of Combustion of Bagasse.—One pound of carbon requires for its combustion 2·67 lbs. oxygen, and one pound of hydrogen requires 7·93 lbs. oxygen. One pound of dry bagasse of the typical composition accepted above will then require: $0{\cdot}465 \times 2{\cdot}67 + 0{\cdot}065 \times 7{\cdot}93 = 1{\cdot}75$ lbs. oxygen. The bagasse itself contains 0·45 lb. oxygen, so that there has to be supplied 1·30 lb. from the air.

The composition of the atmosphere will be taken as oxygen 23 per cent., water vapour 1 per cent., nitrogen 76 per cent., included in "nitrogen" being all the rarer gases of the atmosphere.

To supply 1·30 lb. in oxygen there will be then required 5·65 lbs. air, and the products of combustion per pound of bagasse will be :—

Due to carbon	$0{\cdot}465 \times 2{\cdot}67 + 0{\cdot}465$ ..	1·70 lb. Carbon dioxide.
Due to hydrogen	$0{\cdot}065 \times 7{\cdot}93 + 0{\cdot}065$ ..	0·58 lb. Water.
Introduced with air	$5{\cdot}65 \times 0{\cdot}01$ ..	0·06 lb. ,,
,, ,, ,,	$5{\cdot}65 \times 0{\cdot}76$ ..	4·30 lb. Nitrogen.

It is not possible to burn any material with the admission of only the exact amount of air necessary; for, with the very best control, 50 per cent. excess is necessary, and 100 per cent. excess is not considered unreasonable. With 50 per cent., 75 per cent., and 100 per cent. excess air, the products of combustion per pound of dry bagasse will then be :—

		50 per cent. excess.	75 per cent. excess.	100 per cent.
Due to Carbon	Carbon dioxide ..	1·70	1·70	1·70
Due to Hydrogen	Water	0·58	0·58	0·58
Introduced with air	Water	0·08	0·10	0·11
,, ,,	Nitrogen	6·45	7·51	8·59
,, ,,	Oxygen	0·65	0·97	1·30

To reduce these figures to a pound of mill bagasse containing 55 per cent. dry matter and 45 per cent. water, all that is necessary is to multiply by 0·55 and to add 0·45 lb. to the water, whence the following results are obtained in terms of a pound of mill bagasse :—

	Pounds, per Pound of Bagasse		
	50 per cent. excess air.	75 per cent. excess air.	100 per cent. excess.
Carbon dioxide	0·94	0·94	0·94
Water	0·81	0·82	0·83
Nitrogen	3·55	4·13	4·72
Oxygen	0·36	0·53	0·71

At a temperature of 0° C. and 760 mm. pressure, the volumes of 1 lb. carbon dioxide, water vapour, nitrogen, and oxygen, are respectively 8·1, 19·8, 12·8, 11·2 cu. ft. At a temperature of 273° C. or 523° F., which may be taken as representative of that prevailing in flue gases, these volumes are doubled. The volumes of the products of combustion of 1 lb. of mill bagasse may then be estimated :—

	Cubic Feet.		
	50 per cent. excess air.	75 per cent. excess air.	100 per cent. excess air.
Carbon dioxide	18·2	18·2	18·2
Water	32·1	32·5	32·7
Nitrogen	90·9	105·8	121·0
Oxygen	8·7	11·9	15·9
Total	149·9	168·4	187·8

These results may be used to compute the required diameter of chimneys or areas of flues. Engineering practice allows a velocity of 20 ft. to 30 ft. per second to the waste gases. It is also customary to take the effective diameter of a chimney as four inches less than the actual diameter.

Temperature reached in Combustion of Bagasse.—One pound of dry bagasse of the typical composition affords on combustion 8,350 B.T.U. with the exact quantity of air for combustion. If the latter is at 32° F., the temperature of combustion T will be found from the following equation :— $8350 = 0{\cdot}58\ [180 + 970 + 0{\cdot}48\ (T - 212)] + T\ (1{\cdot}7 \times 0{\cdot}217) + T\ (0{\cdot}06 \times 0{\cdot}48) + T\ (4{\cdot}30 \times 0{\cdot}244)$, whence $T = 4410$.

If the air is at $t°$ F. instead of 32° F., the temperature reached will be $T + (t - 32)$.

In this equation the latent heat of steam is taken as 970, and the specific heats of steam, nitrogen, and carbon dioxide, as 0·48, 0·24 and 0·22.

Similarly, the temperature of combustion of bagasse with associated water and with various quantities of excess air can be calculated. Certain examples are tabulated below, referring to the typical dry bagasse with 45, 50, 55 per cent. of associated water. The specific heat of oxygen is taken as 0·22.

	Excess Air.			
Water per cent. bagasse.	None.	50 per cent.	75 per cent.	100 per cent.
	Rise in temperature F°.			
45	3320	2430	2160	1940
50	3020	2310	2000	1850
55	2770	2140	1900	1720

These calculations do not take into consideration unburnt fuel or losses due to radiation.

The temperature of combustion is a most important point in the economics of bagasse firing. If caused either by an excess of air, by an insufficient supply of air, or by an excess of water (inefficient mill work), the temperature falls below a certain limit, products of distillation are formed which pass through the furnace unburnt, and lower the quantity of heat which would otherwise be afforded by the bagasse. Hence, the effect of sending to the furnaces material containing only a little more than the normal quantity of water may have an effect on the steam production quite out of all proportion to a computation based on the heat required to evaporate the additional quantity of associated water. Bolk[7] believes that the point at which unburnt products distil over is where the bagasse contains 52 per cent. or more of water.

Steam Available from Bagasse.—The subjoined table is calculated on the following basis: each pound of water present in the flue gases, whether associated water or water formed on combustion, abstracts 1,250 B.T.U.: each pound of gases, whether carbon dioxide, oxygen, or nitrogen, abstracts 100 B.T.U.

These data correspond to external air at about 80° F. and to a flue gas temperature of a little over 500° F. No allowance is made for radiation loss or for unburnt fuel. The calculation is made for bagasse with 45, 50, 55 per cent. water, the dry matter being taken as having a heat of combustion of 8,350 B.T.U. per lb. The last column in the table gives the computed lbs. steam per ton of cane containing 10 per cent. fibre, and can be easily converted to conform with any other fibre content. It is not to be overlooked that when the bagasse contains 55 per cent. water there is only 40 per cent. fibre, and hence 500 lbs. bagasse per ton of cane. When the bagasse contains 45 per cent. water, there is 50 per cent. fibre, and only 400 lbs. bagasse per ton of cane. Accordingly, the quantities in the penultimate column expressing the computed lbs. of steam per lb. of bagasse are not directly proportional to the steam available per ton of cane. The quantity of dry fuel available remains the same, the heat afforded is the same, but more goes away as steam in the flue gases in one case than in another. As has been already remarked, however, with the higher percentages of water, there is reason to believe that the combustion becomes more and more imperfect, so that differences much greater than those indicated by the calculation actually do occur.

ESTIMATED THERMAL VALUES OF BAGASSE.

BAGASSE 45 PER CENT. WATER. HEAT OF COMBUSTION 4,582 B.T.U.

		Total waste gas loss.	Available for steam.	Per cent. of total.	Equivalent lbs. steam per lb. bagasse from and at 212° F.	Equivalent lbs. steam per lb. dry bagasse from and at 212° F.	Equivalent lbs. steam per ton of cane containing 10 per cent. of fibre from and at 212° F.
Heat lost in associated water ..	562	..	..	..	..	..	..
Combined water	399	..	..	68·4	..	..	..
Flue gases 50 per cent. excess air	484	1,445	3,137	68·4	3·24	5·90	1,296
Flue gases 75 per cent. excess air	560	1,521	3,061	66·8	3·16	5·75	1,264
Flue gases 100 per cent. excess air	637	1,598	2,984	65·0	3·07	5·59	1,228

BAGASSE 50 PER CENT. WATER. HEAT OF COMBUSTION 4,175 B.T.U.

		Total waste gas loss.	Available for steam.	Per cent. of total.	Equivalent lbs. steam per lb. bagasse from and at 212° F.	Equivalent lbs. steam per lb. dry bagasse from and at 212° F.	Equivalent lbs. steam per ton of cane containing 10 per cent. of fibre from and at 212° F.
Heat lost in associated water ..	625	..	..	..	..	..	..
Combined water	363	..	..	..	..	..	..
Flue gases 50 per cent. excess air	440	1,428	2,747	65·9	2·84	5·68	1,260
Flue gases 75 per cent. excess air	509	1,497	2,678	64·2	2·77	5·54	1,230
Flue gases 100 per cent. excess air	579	1,567	2,608	62·5	2·69	5·38	1,195

BAGASSE 55 PER CENT. WATER. HEAT OF COMBUSTION 3,757 B.T.U.

		Total waste gas loss.	Available for steam.	Per cent. of total.	Equivalent lbs. steam per lb. bagasse from and at 212° F.	Equivalent lbs. steam per lb. dry bagasse from and at 212° F.	Equivalent lbs. steam per ton of cane containing 10 per cent. of fibre from and at 212° F.
Heat lost in associated water ..	687	..	..	..	..	..	..
Combined water	326	..	..	..	..	..	..
Flue gases 50 per cent. excess air	396	1,409	2,348	62·6	2·43	5·40	1,215
Flue gases 75 per cent. excess air	458	1,471	2,286	61·0	2·36	5·24	1,180
Flue gases 100 per cent. excess air	522	1,535	2,222	59·1	2·29	5·10	1,145

Actual Results obtained in the Combustion of Bagasse.—Following on the computation given in the preceding section, some results of boiler trials are given in tabular form below.* Of these Nos. 1–3 were made by Kerr,[8] and 4, 5, 10, 11 were made by the writer; the rest are taken from "Steam," published by the Babcock & Wilcox Co. In tests 1 and 2 flat grates with Dutch ovens were used; in 3 a flat grate with extended Dutch oven, the volume of the combustion space being 3·83, 2·58, 6·00 cu. ft. per rated B.H.P. respectively. The tests numbered 4, 5, 10, 11, were made with Dutch ovens with step grates.

These tests seem to cover a wide range of conditions as regards grate area, heating surface, and fuel burnt; but there does not appear to be any instance that can be picked out pointing to superiority in any one particular. Roughly they may be interpreted as indicating that a well-designed steam producing plant should actually afford 2·5 lbs. steam per lb. of bagasse burnt, when the latter does not contain over 45 per cent. water; and if these trials count for anything this quantity should form a basis of design.

The tests Nos. 4 and 5, which afforded results much higher than any of the others, were made with two boilers set tandem, the second having been added with the original installation of furnace and grate left unchanged. Accordingly, a relatively small quantity of bagasse was burnt per sq. ft. of heating surface.

The term efficiency is used in two senses. In the line marked A, it refers to the ratio $\frac{\text{Heat in steam produced}}{\text{Heat in fuel burnt}}$; in the line marked B, it refers to the ratio $\frac{\text{Heat in steam produced} - \text{Heat in steam due to associated water in fuel.}}{\text{Heat in fuel burnt.}}$

This last ratio is unusual, but is a rational method of comparison.

DATA OF VARIOUS BOILER TRIALS.

	1	2	3	4	5	6	7	8	9	10	11
Water per cent. bagasse ..	55.3	46.5	45.8	47.4	47.4	52.4	52.9	51.8	51.7	45.9	45.0
Lbs. dry bagasse per sq. ft. heating surface per hour	0.44	0.81	1.94	0.39	0.37	0.79	0.70	0.76	0.84	0.77	0.85
Lbs. dry bagasse per sq. ft. grate area per hour ..	44.3	47.0	101.0	41.3	41.0	71.9	63.9	147.1	163.4	29.8	33.0
$\frac{\text{Heating surface}}{\text{Grate surface}}$	100.1	58.1	52.1	108.8	108.8	91.8	91.8	193.4	193.4	38.6	38.6
Flue gas F° ..	624	529	597	429	434	536	541	522	547	520	631
Excess air per cent.	124	98	90	36	34	56	70	84	68	52	40
Lbs. steam from and at 212 F° per lb. dry bagasse	3.88	4.78	4.33	5.45	5.28	4.26	4.67	4.30	4.15	4.20	4.28
"Efficiency" A	45.0	55.5	50.3	63.3	61.3	49.4	54.2	49.9	48.2	49.4	49.7
"Efficiency" B	64.0	69.0	63.3	77.3	75.1	66.7	71.4	66.5	64.5	62.5	62.4

The Connection between Quantity of Fuel burnt and Heating Surface.—The combustion of a fuel gives rise to a quantity of hot gases at a certain

---

* The data as published have been rearranged by the writer and certain of the items entered have been calculated from the records as given in the publication whence they are taken.

temperature. The principles under which this obtains have been given in the preceding sections, with special reference to bagasse. These hot gases come into contact with the boiler, which is at a lower and constant temperature. The rate at which the heat from the hot gases passes to the water in the boiler is proportional in some way to the difference in temperature. Rankine[9] assumed that the rate was proportional to the square of the temperature difference, and this assumption is developed very completely by Kent.[10] Accepting this assumption, the writer offers the following graphic analysis with special reference to bagasse burning.

Let the bagasse on combustion afford hot gases at a temperature of 2200° F.; let the boiler be at a temperature of 350° F. (roughly 120 lbs. gauge): the initial temperature difference is 1850° F. After the gases are cooled down to 1200° F., the temperature difference is 850° F., and the rate of transfer is proportional in the two cases to the squares of 1850 and 850. The graph in *Fig.* 274 is obtained thus: On the horizontal axis are set out the temperatures 2200, 2100 .... 450. From these points are drawn ordinates proportional to the reciprocals of the squares of the temperature differences; that is to say, to 1850, 1750 .... 100. The graph is then obtained by drawing a curve through the ends of these ordinates. Then the area enclosed between any two ordinates, the base line, and the curve, is proportional to the heating surface required to reduce the temperature of the gases from the temperature under the first ordinate to the temperature under the second ordinate. In the graph above the curve have been inserted the areas of each division of 100°, and below the horizontal axis the total area at any particular temperature. Thus to reduce the temperature from 800° to 700°, an area proportional to 709 units is required; the total area required to reduce the gases from 2200° to 700° being 2154 units. Again, on this basis it follows that if a certain heating surface, say 3349 sq. ft., is sufficient to reduce the hot gases to 600° F., then to reduce them to 500° F. an additional 1658 sq. ft. will be required; that is to say, 5007 sq. ft. in all. Again, if the external air be taken as 80° F., a reduction in temperature from 2200° to 80°, or 2120° F., would represent 100 per cent. efficiency. A reduction to 600° F. indicates a fall of 1600° F., so that at this temperature in the waste gases the efficiency is $\frac{1600 \times 100}{2120} = 75 \cdot 5$ per cent. A reduction to 500° F. would similarly indicate an efficiency of 80·1 per cent., or an increase in efficiency and steam production of 6·0 per cent., which would be obtained by an increase in the heating surface from 3349 to 5007 or 49 per cent.

Again, let a quantity of fuel be burnt such that the waste gases pass away at 500° F., and let the heating surface be 5007 sq. ft. Let double the quantity of fuel be burnt, or the original quantity per 2503 sq. ft. This area is found from the graph to correspond to a temperature of 680° F., and to an efficiency of 76·0: that is to say, doubling the fuel capacity of a furnace only decreases the efficiency from 80·1 per cent. to 76·0 per cent. In other words, a steam-producing plant is a very elastic system capable of carrying great overloads with relatively very small decrease in efficiency.

This discussion is very incomplete and treats of heat transfer by conductance only, and also reflects the question of radiation losses. It has been introduced rather to present the general principle involved, along with the engineering problem, namely the determination of the economic heating surface, questions of first cost of installation as well as fuel consumption

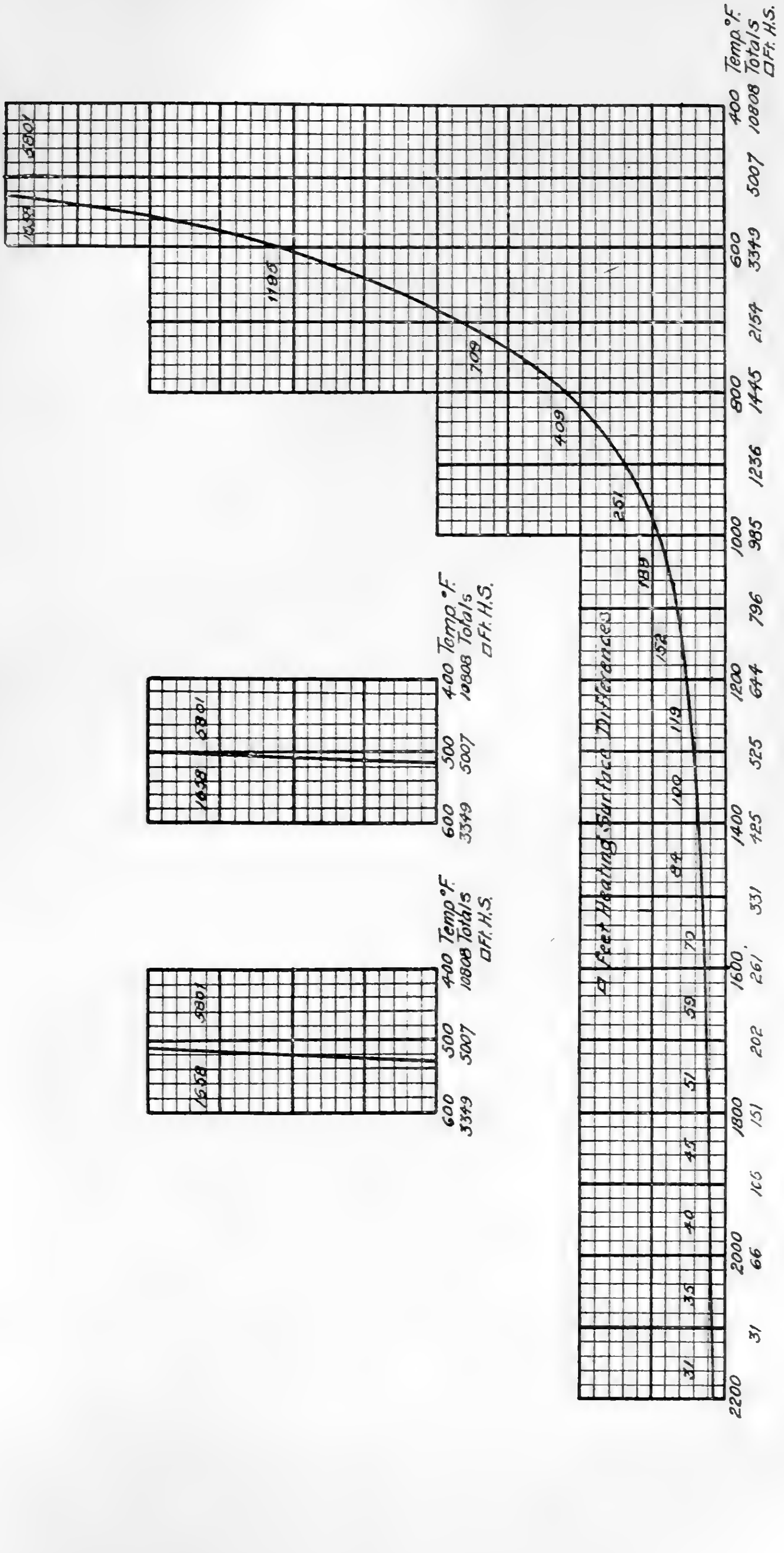
Temp °F.
Totals
□Ft. H.S.
400 10808
5007
600 3349
2154
800 1445
1236
1000 985
796
1200 644
525
1400 425
331
1600 261
202
1800 151
105
2000 66
31
2200
5801
1658
1195
709
409
251
189
152
119
100
84
72
59
51
45
40
35
31
□ Feet Heating Surface Differences
400 Temp °F.
10808 Totals
□Ft. H.S.
500 5007
600 3349
5801
1658

FIG. 274

being considered. For more detailed general treatments reference may be made to Kent's "Steam Boiler Economy," and to Kreisinger and Ray, Bull. 18, U.S. Bureau of Mines.

Steam Value of Bagasse.—It is a matter of observation among those who have had an extended experience in cane sugar factories that at times the bagasse "steams" much worse than at others. Not only is there an insufficient production of steam for the wants of the factory, but there is difficulty in burning the bagasse. In Demerara, Mauritius, and Hawaii, the writer has observed this condition associated with the cane known as White Transparent or Rose Bamboo, and in Demerara with "seedlings" generally. The detailed studies of Geerligs and Norris eliminate the question of the fibre of one cane being of more value than another, except in a degree quite insufficient to account for the difference which may be observed; and although low fibre content will account for an insufficiency of fuel it will not explain bad combustion.

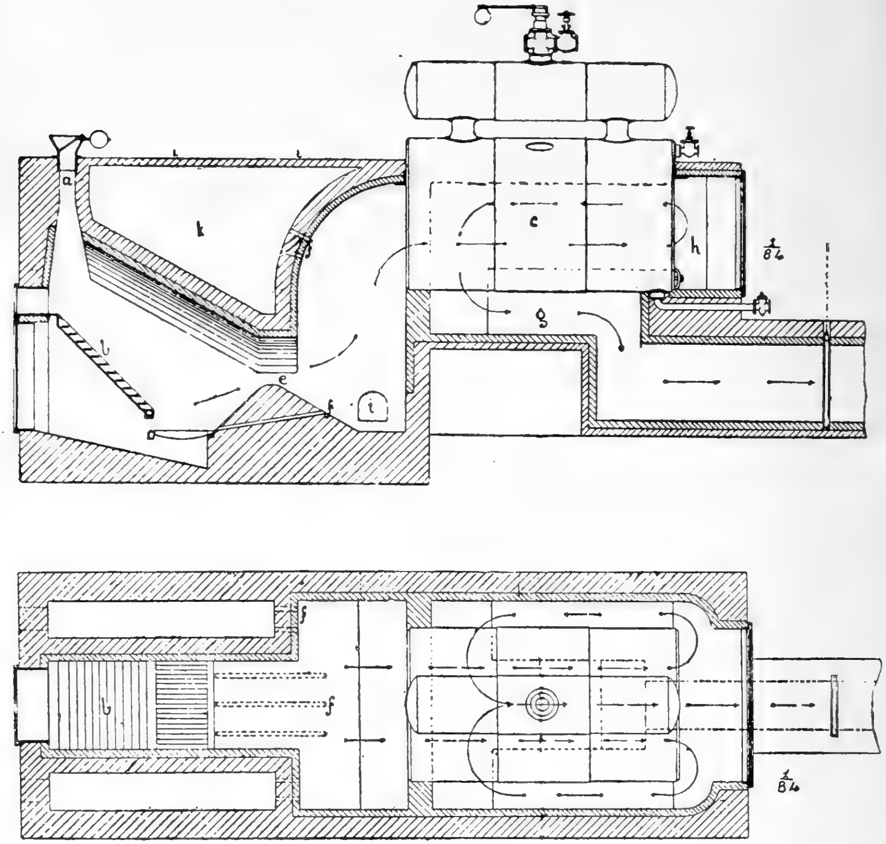

FIG. 275

In a detailed study of the matter, Geerligs[3] observed among other points that there was a great variation in the volume occupied by the same weights of bagasse from different varieties; the weight of 100 c.c. of bagasse lying all the way from 5·45 to 7·95 grams, and the following observations were drawn.

1. A denser bagasse was of superior fuel value.
2. A denser bagasse was generally rich in cellulose.
3. Canes with most fibre give a bagasse of superior fuel value.

These observations tend to connect the mechanical structure of the bagasse with fuel value, for it is not unreasonable to suppose that a grate area sufficient for a dense bagasse may be too small for that afforded by another type, and the solution of the trouble would be in the installation of auxiliary grate area.

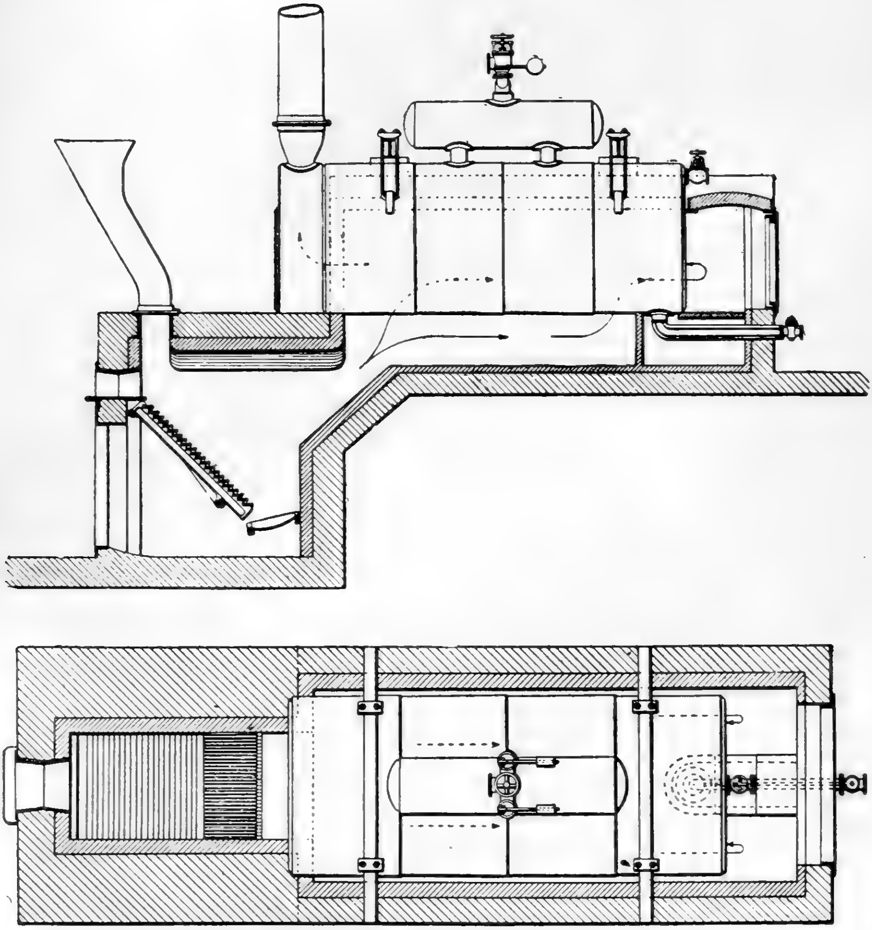

FIG. 276

In addition, the trouble may be due to a combination of all the causes tending towards low thermal value :—

1. A fibre with the lower limit of the recorded heat of combustion.
2. A fibre which retains after crushing a higher quantity of water.
3. A lower percentage of fibre in the cane.

4. A bagasse of low apparent specific gravity.

All these causes combined in one cane would be sufficient to account for the actually observed results, although any one might not be of itself of sufficient magnitude to be detected in the routine control; and, further, the trouble might be accentuated by the objectionable combinations causing an imperfect combustion in the bagasse.

Furnaces employed in Bagasse Combustion.—The main principle from which the various designs of bagasse furnaces have been developed is the complete combustion of the fuel before the hot gases impinge upon the boiler surface. This end has been obtained by external furnaces, large combustion chambers, arrangements of arches, check walls and baffles designed to cause the gases both to mix and to pass over surfaces of incandescent brickwork, and by the use of waste radiant heat to partially dry the bagasse before combustion begins. These principles seem to have been first clearly enunciated by Marie (patent 1017 of 1881), and to have been put into practice by him. In the Figures below are collected a number of typical designs.

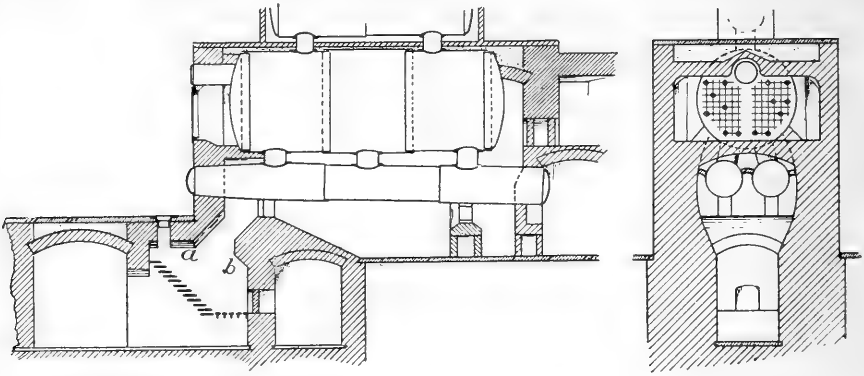

FIG. 277

Fig. 275 shows a furnace and setting devised by Abel,[11] whose name is usually attached to this design. The bagasse enters at *a* and falls on to the step grate *b*. The combustion chamber is formed by the inclined arch *k*, acting in combination with the check wall *e*, and beyond this there is formed a supplementary chamber. The storage platform for bagasse is at *i i*, and this platform enclosed a chamber *k* whence hot air may pass into the supplementary combustion chamber with the idea of completing any imperfect combustion. Air also enters the furnace through the passage *f*. The path of the gases is underneath, back through the tubes and out along the side. This type of furnace is largely used in Demerara, where it was developed.

Fig. 276 shows a type much simpler than the foregoing, and which is used extensively in the Hawaiian Islands. Here the gases travel underneath and along the sides and back through the tubes to the main flue.

The type that has been evolved in Java is shown in *Fig.* 277. It is noticeable for the steeply inclined grate and for the overhanging arch, *a*, at the upper portion of the grate and for the baffle, *b*, running in a reversed direction. In some cases in Java a supplementary furnace is used, with the intention of drying the bagasse before combustion obtains in the furnace proper.

Fig. 278 shows a furnace as applied to a Stirling boiler, and differs from the other designs by the adoption of a horizontal arch, *a*, in place of a sloping one, and by a check wall, *b*, of larger dimensions.

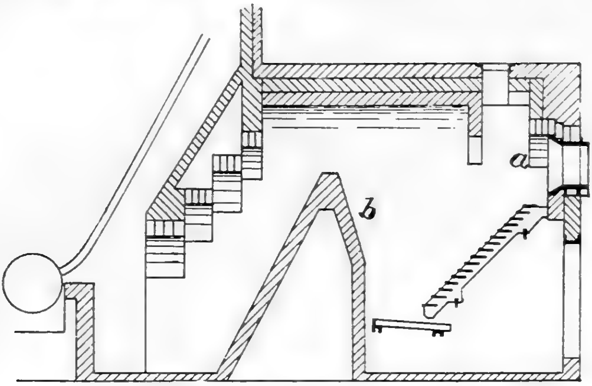

FIG. 278

The principle of causing very complete mixture of the products of combustion by means of a reversed check wall, *a*, combined with a long extended combustion chamber, is shown in *Fig.* 279, as applied to a Babcock & Wilcox boiler.

All the above examples have been shown with inclined grates. *Fig.* 280 shows a flat grate provided with hollow blast furnace bars, *a*. The air necessary for combustion enters by the conduit *b*.

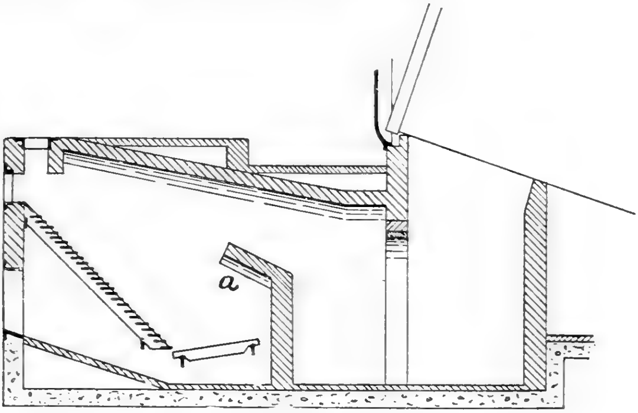

FIG. 279

The grate disappears entirely in the Cook furnace (U.S. patents 203643, 1886; 362362, 372969, 1887; 382992, 1888; U.K. patent 12393 of 1889). In this design the bagasse is burnt on a hearth, the air necessary to combustion being supplied through the twyers *a*. As shown in *Fig.* 281, the typical Cuban setting of one hearth to two boilers is indicated with passage of the gases underneath, back through the tubes and out over the top of the boiler to the main flue.

The grates themselves are either flat bar, step grate, or flat grates. The first-mentioned type has almost disappeared. Sections of forms of step grates are shown in *Fig.* 282. The type on the extreme right comes from Java, and eliminates one difficulty of the step grate, namely a tendency for the bagasse to feed forward unevenly.

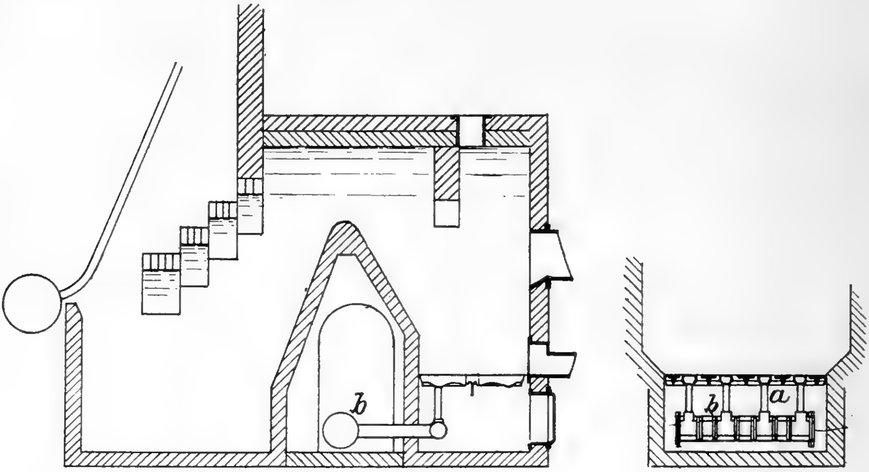

FIG. 280

Besides the grate proper, an integral portion of the furnace is the ash grate indicated in the above sketches at the lower portion of the inclined portion. Frequently a large air space is left between these two elements both for the admission of air and for the removal of clinker. In other designs the ash grate is made so as to allow of pivoting to aid in clinker removal.

The flat grate shown in *Fig.* 280 is intended to be used with forced draught, and may, of course, be applied to any other type of furnace and boiler.

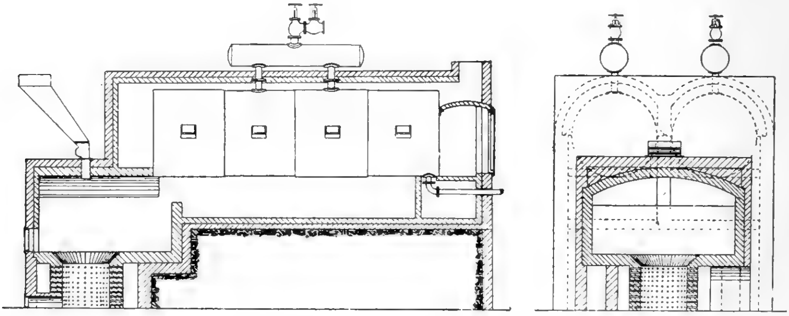

FIG. 281

A point wherein considerable difference in practice exists is the ratio of openings between fire bars to total area of grate. Generally the area is approximately evenly divided between bar and opening, but examples may be found with either twice as great as the other.

All schemes now used in the stoking or firing of bagasse may be referred back to Fryer and Alliott's patent (284 of 1883), other essential principles of which scheme appear again in one (8320 of 1903) granted to the Stirling Boiler Co. This scheme is shown diagrammatically in *Fig.* 283. Bagasse direct from the mill is delivered to an elevator, which in turn discharges to a scraper carrier, *a*, running in a direction at right angles to the furnaces. From the mouths of the furnaces, *b*, shoots, *c*, communicate with the carrier, over each shoot being a sliding trap door controlled from below, whereby bagasse may be directed to the shoot, whence it gravitates to the furnace. The actual feeding to the furnace is often effected by a rotating drum, *d*, on which are placed longitudinal projections, *e*, shown on an enlarged scale in the right-hand sketch. In this design the door, *f*, automatically closes when the hopper is empty.

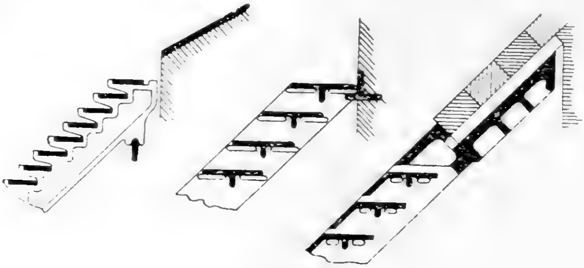

FIG. 282

Two lay-outs of furnaces are general. In one they are arranged in two lines between which is located a platform, on to which surplus bagasse may be discharged through trap doors, and which serves as storage room. Otherwise the carrier may be extended beyond the line of the furnaces, and may discharge any surplus to a shed there located. In this case a return carrier is provided to deliver the surplus back to the main carrier when required.

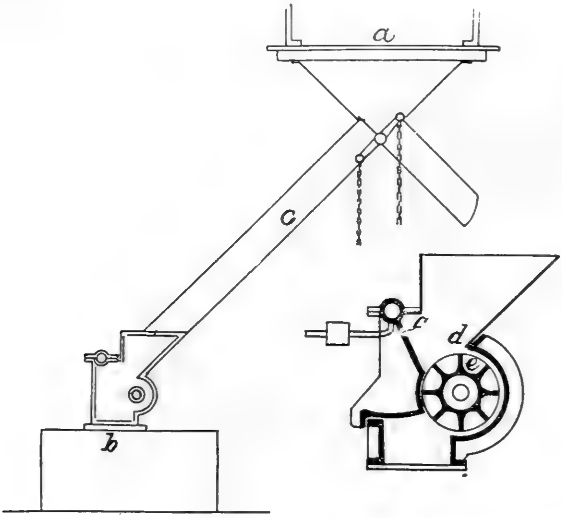

FIG. 283

The boilers used in connection with bagasse are not specialized types, modern practice seeming to be equally divided between the horizontal fire-tube boiler and some form of the water-tube. In some houses two distinct batteries have been installed; the latter to supply steam at higher pressure to the engines, and the former to give steam at a lower pressure to the heating and evaporating stations.

It was for long considered a fundamental idea in sugar-house design that a type of boiler of large water capacity should be installed, so as to allow for unequal consumption of steam in the boiling house. This argument has been used to support the fire-tube as opposed to the water-tube boiler. In badly designed or badly operated houses these unequal loads may occur, but rational operation is capable of eliminating them. In addition, water-tube boilers with specially constructed large water spaces are made, and in any case the difference is not large.

The first cost of the fire-tube boiler is less, but the water-tube being constructed in larger units decreases the cost of operation, though large units are objectionable when it comes to cutting out a unit for cleaning or washing out. In the writer's opinion economy in steam is not so much a question of the boiler as it is of the furnace, of the firing of the bagasse, and of the intelligence with which the whole factory is operated as a co-ordinated whole.

The " Boiler Horse Power " required in a Cane Sugar Factory.—Given the number of tons of cane to be ground per hour, the designer of a factory has to determine the " Boiler Horse Power " or square feet of heating surface to be installed in the steam-producing plant. To give a rational answer to this question the designer should be supplied with complete data showing how much steam is intended to be used in the factory in heating, in evaporation, and in pipe and cylinder condensation, etc. This will depend on the quantity of mixed juice to be obtained per ton of cane and on the system of heating and evaporation adopted.

In the beet sugar industry this is a comparatively simple matter, since the rate of operation can be regulated to a uniform daily output, and all the fuel consumed is independent of any supplied as a waste material.

In the cane sugar industry in many localities it has come to be considered that the bagasse should afford all the fuel necessary, and the operations in the factory are often controlled by the quantity of bagasse, or in other words by the fibre in the cane. This quantity varies between the limits of 10 and 15 per cent., so that between different factories there may be a 50 per cent. variation in the quantity of fuel available from the cane. Hence, a ratio of Boiler Horse Power to cane correct for one factory may be quite inadequate for another, if it is only desired to burn a certain quantity of bagasse at its maximum efficiency. It is fortunate, however, that steam-producing plants permit of very considerable elasticity, whilst remaining within reasonable economic limits. For example, in the data of boiler trials collected in this chapter there is very wide variation in the quantity of dry bagasse burnt per sq. ft. of heating surface, and very much less variation in the efficiency. Evidently the greater the heating surface the greater is the opportunity to abstract heat from the hot gases; but, after the temperature of the gases has been reduced to a certain temperature, very large heating surfaces are required to effect any further reduction, and conversely the capacity for producing steam by burning increased quantities of fuel per sq. ft. of heating surface is but little affected. This point has been discussed at length in a previous section.

From a study of actual results, and bearing in mind capital, cost of extra fuel, etc., the writer has come to the conclusion that, as a basis of design referred to a cane with 10 per cent. of fibre, the economic limit is reached when about 1 lb. of bagasse with 50 per cent. fibre is burnt per sq. ft. heating surface per hour. Under these conditions this is equivalent to 400 sq. ft. heating surface per ton-cane-hour, and allowing for one boiler in ten being out of service for cleaning furnaces, etc., to 450 sq. ft. in round numbers. When the fibre in the cane increases, more bagasse is available for fuel and more will be burnt per sq. ft., with only a small fall in the efficiency, and an increase in the total amount of steam produced, which will be used up in heating a greater amount of mixed juice following on a greater dilution. Some figures from actual factories all of recent design follow :—

Hawaii.—Thirteen factories. Average 429 : extremes 350 to 570 sq. ft. per ton-cane-hour.

Java.—Ten factories. Average 429 : extremes 319 to 569 sq. ft. per ton-cane-hour.

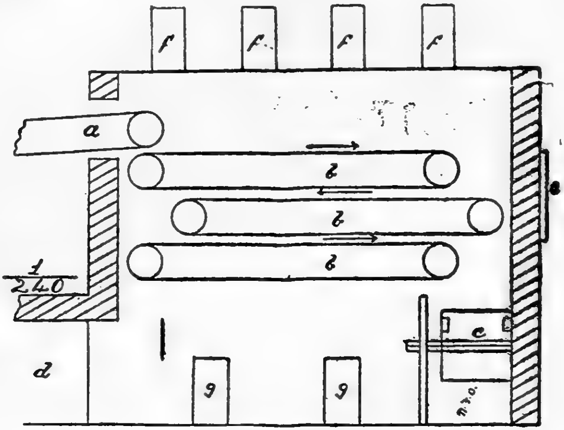

FIG. 284

Cuba.—Seventeen factories. Average 532 : extremes 385 to 610 sq. ft. per ton-cane-hour.

In the taking out of these data the results have been expressed as fire-tube heating surface, water-tube heating surface being considered as of 20 per cent. higher value.

The ratio of grate area to heating surface is found to offer wide variation, the lowest ratio the writer has ever observed being 1 : 54, and the highest 1 : 343 ; generally this figure is found to be within the limits 1 : 70 to 1 : 120. Connected with this ratio is the quantity of bagasse burnt per sq. ft. of grate area per hour. With a ratio of grate area to heating surface of 1 : 100, and 1 lb. bagasse burnt per sq. ft. heating surface per hour, 100 lbs. will be burnt per hour per sq. ft. of grate.

Of some importance also is the volume of the combustion chamber in relation to fuel burnt. Difficulty at once arises in determining what is the combustion chamber, since some engineers treat the space under the boiler as a combustion chamber, and others only that volume before the gases come in contact with the boiler. Treating of the external furnace only before the gases reach the boiler, the volume usually found is from 10 to 30 cu. ft. per

100 sq. ft. of heating surface, or per 1 lb. of bagasse per hour on the basis outlined above: including the space beneath the boiler as combustion volume, this ratio is roughly halved. The writer believes that the exaggerated combustion volumes sometimes found are inefficient, as exposing a large area for radiation and affording opportunity for leakage of cold air.

Drying of Bagasse.—The earliest proposals to use waste heat for drying bagasse preliminary to its combustion are those of Merrick (U.S. patent 3994, 1845) and Crosley (U.K. patent 11158, 1846). These patents claimed the use of endless horizontal metallic belts arranged in a brick chamber, through which the waste flue gases were exhausted to a chimney. This device has become a part of routine practice in Mauritius, where their introduction is due to Eynaud. The general arrangement followed is indicated in *Fig.* 284. In a factory working up 50 tons of cane per hour the *sécherie* was 40 feet long, 7 ft. wide and 30 ft. high. The carriers ran at 7 ft. per minute, the period of exposure being 18 minutes. The bagasse entered with 50 per cent. of water and left with 35 per cent., corresponding to the removal of one half of the water. These *sécheries* are operated in combination with induced drafts; other arrangements use a vertical shaft, down which the bagasse falls in counter-current relation to the ascending hot gases. This scheme appears in Gros-Desormeaux's patent (1532 of 1882), and again has been experimented with by Kerr and Nadler,[12] who place in the shaft a series of inclined trays. For a mill working up 1,000 tons cane per day, they estimate the total cost erected of the plant to be $15,000–$16,000. A third scheme is the Huillard dryer,[13] based on the beet pulp dryer, and in operation in Egypt. This arrangement consists of a vertical brickwork chamber, down which the bagasse travels in a spiral. A fourth scheme employs a rotating drum slightly inclined from the horizontal and similar in principle to the sugar dryer described in Chapter XXI. In a series of boiler trials made by Kerr and Nadler with bagasse containing 53·5 per cent. of water, and the same bagasse dried to 45·4 per cent., the evaporation from and at 212° F. was 1·63, and 2·35 lbs. water per lb. of fuel, or 3·51 and 4·65 lbs. per lb. of dry fuel. This result is probably to be correlated with the incomplete combustion that occurs when the water in a bagasse exceeds a certain limit.

Although computation will show that a very sensible benefit obtains from drying bagasse, the scheme is little used, and the benefits are counterbalanced in other ways. There has to be supplied fan draft, together with the power required to operate the dryer machinery; some mechanical loss occurs on handling; and difficulty is experienced in firing the very light material, which has a tendency to be swept through the flues unburnt. Furthermore, in operating a *sécherie* in Mauritius, the writer observed that a little inattention would result in the contents of the *sécherie* igniting, with the loss of fifteen minutes' supply of fuel.

Value of Bagasse as compared with other Fuels.—The relative value of bagasse, wood and coal is often required, as fuel statistics are generally based on the coal value of the fuel burnt. There is no constant fuel value for either bagasse or coal, and any factor adopted depends on the local conditions; coal, depending on its quality and the skill used in firing, may give from 7 to 12 lbs. of steam per lb. consumed. On an average from 4 to 5 tons of bagasse are equal to a ton of average coal. Woods, weight for weight and of the same water content, have practically identical values; air-dried wood usually contains from 20 per cent. to 30 per cent. of water and from 3 to 3·5 tons are equal to a ton of average coal. Molasses are of very similar value to wood, the predominant factor being, of course, the water content. Cane straw contains as a rule about 10 per cent. moisture and from 2·5 to 3 tons are equal to a ton of coal. A table giving a comparison of fuel values follows :—

Fuel.	Gross B.T.U. per lb.
Welsh Steam	15,000—16,000
Pennsylvania Anthracite	15,000—16,000
Newcastle	14,000—14,500
Lancashire	14,000—14,500
Scotch	13,000—14,000
Australian	13,000—14,000
Indian	13,000—14,000
Patent Fuel	15,000—16,000
Air-dried wood 25 per cent. moisture	4,500—5,000
Green Bagasse 45 per cent. water	4,500
Cane Straw 10 per cent. water	7,500
Molasses 25 per cent. water	4,500
Petroleum	16,000—17,000
Carbon	14,400

Fuel Value of Molasses.—Atwater found 6956 B.T.U. per pound of dry matter; Norris[4] obtained 4759 and 5137 B.T.U. for molasses containing 20·8 and 21·9 per cent. of water and 14·1 and 8·4 per cent. of ash. Hoogewerf[14] found 5275 B.T.U. for a sample with 19·4 per cent. of water.

The great trouble that has always been experienced in burning molasses in combination with bagasse is the formation of a large amount of ash and clinker. During the campaign of 1914-15 special molasses furnaces and boilers were erected in Hawaii both to burn the molasses and to recover the potash in the ash.

The molasses were burnt on a hearth in an extended furnace, the ash in part remaining on the hearth and in part being deposited on the flues. Under a 16-ft. × 6-ft. horizontal fire-tube boiler there was burnt per hour 880 lbs. of molasses, which afforded 1,476 lbs. steam and 77 lbs. ash.

It will be found, however, that it is only when the cost of fuel is excessively high, or when the value of molasses is abnormally low, that it is economical to burn this material, even allowing for the recovery and sale of the potash.

Fuel Value of Cane Straw.—Hoogewerf[14] found 7841, Koenig and Bienfait[11] 7409, and Norris[4] 7780 B.T.U. per lb. of dry matter.

REFERENCES IN CHAPTER XXIII.

1. La. Ex. Sta., Bull. 91.
2. *S.C.*, 1869, 1, 17.
3. Java *Arch.*, 1906, 14, 445.
4. H.S.P.A. Ex. Sta., Agric. Ser., Bull. 32.
5. *La. Plant.*, 1906, 11.
6. La. Ex. Sta., Bull. 109.
7. Java *Arch.*, 1906, 14, 319.
8. *La. Plant.*, 1913, 54, 315.
9. "The Steam Engine and Other Prime Movers."
10. "Steam Boiler Economy."
11. *Proc. Inst. Civ. Eng.*, 1894, 123, 370.
12. *Int. Sug. Jour.*, 1908, 10.
13. *Int. Sug. Jour.*, 1907, 339.
14. *Bull. Assoc. Chim. Suc.*, 1905, 150.

CHAPTER XXIV

THE POLARIMETER*

THIS chapter treats of the principles involved in the determination of cane sugar through its action on plane polarized light, the subject being carried so far as to enable the operator to appreciate the principles of the methods and the construction of the instruments that he employs. For more detailed treatment reference should be made to the larger works of Landolt or of Browne, and to textbooks on Physics and on Light.

Nature of Light.—Ordinary light is accepted as being the effect on the eye of vibrations in the ether which take place in all directions. According to the wave length of the vibrations, the eye receives the sensation of colour, white light being the effect on the eye of the simultaneous receipt of ether vibrations of different wave lengths and colours, which severally go to form the colours of the spectrum, into which white light is split up on its passage through a prism.

Polarized Light.—By means of certain devices the vibrations of ordinary light may be confined to one plane and such light is called polarized light. The position of the plane may be determined by many devices and hence, if the plane be rotated, the angle through which rotation has occurred may be measured.

Rotation of the Plane of Polarization.—There are certain bodies characterized by the possession of an asymmetric carbon atom (or atom which is at least quadrivalent), which have the property of rotating the plane of polarization when a beam of such light is passed through them. Generally the magnitude of the angle through which the plane is rotated is proportional to the concentration of the active material and the length of column through which the passage of light occurs. Hence if the rotation is known for one definite length and concentration, the composition of an unknown solution can be found when the length of column thereof and the rotation produced thereby is known.

Cane sugar is but one of very many bodies of the class mentioned above, and, owing to its commercial importance, polarimeters are built specially designed and graduated for sugar analysis. Such instruments are often called saccharimeters, but it is to be understood that instruments designed for general work can be used equally well for sugar analysis, and with some types the converse is also true.

---

* In English the word "polariscope" has come to mean an instrument devised to measure the rotation of the plane of rotation. The appropriate use of the word is to designate an instrument or device to see or examine the phenomena of polarized light, and in this sense the word is correctly employed. Polarimeter is used here when reference is made to an instrument measuring rotation.

Those bodies which rotate the plane of polarization are said to be optically active.

Means of obtaining Plane Polarized Light.—All light reflected from a plane surface is partially polarized, and for a certain angle α it is wholly polarized. This occurs when $\tan \alpha =$ index of refraction of the reflecting substance (Brewster's law).[1] This method of obtaining polarized light was used in the first polarimeter of record by Biot,[2] to whom the science of polarimetry in general, and its application to sugar analysis in particular, is due.

The means now almost always adopted to obtain a ray of plane polarized light is the prism of Nicol or some modification thereof. The construction of this is explained below.

If ordinary light be allowed to pass through a rhombic crystal of Iceland spar, *ABCD*, *Fig.* 285, it suffers double refraction and two rays of light emerge where only one entered. This phenomenon, illustrated in *Fig.* 285, always obtains unless the entrant ray of light pass in a direction parallel to the line joining two opposite obtuse angles, this direction being known as the optic axis, and any plane containing the optic axis and perpendicular to the face of the crystal is known as a principal plane.

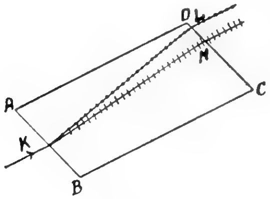

FIG. 285

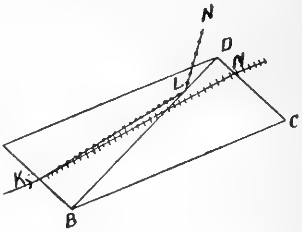

FIG. 286

Of the two rays into which the entrant ray is divided, that ray *KL* more refracted from the original direction is known as the ordinary ray, the ray less refracted, *KM*, being the extraordinary ray. On emergence both rays are found to be plane polarized and in directions at right angles to each other. Thus as illustrated the extraordinary ray vibrates in the plane of the paper, the ordinary ray vibrating at right angles thereto. In 1829, Nicol[3] published a paper, "On a Method of so far increasing the Divergence of the two Rays in Calcareous Spar that only one Image is seen at a Time." The means he adopted was the total reflection of the ordinary ray within the crystal, obtained as follows:—

Let *ABCD*, *Fig.* 286, represent a section through a crystal of Iceland spar divided* along *B D*, and let the two parts into which the crystal is divided be united by a transparent cement, such as Canada balsam. Now the index of refraction of the ordinary ray is 1·658, and that of the extraordinary ray is 1·486. That of Canada balsam is 1·55. Hence when the ordinary ray *K L* meets the film of balsam it is reflected in the direction *L N*, and if the dimensions of the crystal, and the angle of incidence of the beam of light be properly selected, it will pass out through the upper face of the crystal and be lost when the exterior surface is blackened. The extraordinary ray *K M* passes through the balsam with small change of direction

---

* The means adopted by opticians are either sawing through the prism with a copper wire and emery, or grinding away one half of the prism. Splitting is a process not employed.

and emerges as plane polarized light vibrating in a direction perpendicular to the principal plane of the nicol.*

In the natural rhomb of Iceland spar the angles *B A D* and *B C D* are 71°. As constructed by Nicol, these angles were cut down to 68° so as to obtain such an angle of incidence as to eliminate the ordinary ray. This construction was afterwards altered by Nicol himself[4] and by many physicists.

Thus, Hartnack and Prazmowski[7] first suggested that the prism should be sawn from a large crystal of spar, and that to it a rectangular section should be given. Later developments are due to Soleil,[8] Thompson,[9] Glan,[10], Lippich,[11] Glazebrook[12] and Feurstner,[13] the two last mentioned having given very complete mathematical analyses of the passage of light through the prism. Of the various suggestions, that independently made by Thompson and by Glan and a form due to Lippich are now used. The Thompson-Glan combination consists of a right prism with vertical end faces, so cut that the optic axis is parallel to the plane of section. The Lippich prism is cut so that the optic axis is perpendicular to the axis of length, but has no relation to the plane of section, though usually perpendicular thereto. Prisms of the above construction are shown in perspective view in *Fig.* 287. With these prisms a wider pencil of light can be admitted, combined with total extinction of the ordinary ray than can be obtained in the original form; at the same time loss of light by surface reflection also disappears.

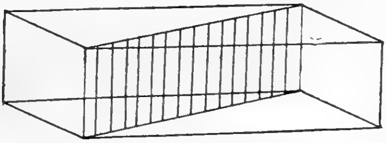

FIG. 287

FIG. 288

Passage of Light through two Nicols.—Let there be two nicols, *P* and *A*, *Fig.* 288, with monochromatic light passing in the direction indicated. The prism next the source of light is called the polarizer, and the one that receives the polarized ray is the analyser. Let the prisms be so arranged that their principal planes are parallel. Then the emergent ray of light from *P* will fall on *A* in a direction parallel to the optic axis, and the extraordinary ray will emerge with its direction substantially unchanged and the quantity of light passing will be a maximum. Let *A* now be rotated through a right angle so that its principal plane is perpendicular to that of *P*. The vibrations of the extraordinary ray now are perpendicular to the optic axis of *A*, and no light passes, and the eye of an observer looking through *A* towards *P* receives the impression of total darkness. These two positions are referred to as parallel and crossed nicols respectively.

Now between the nicols *P* and *A* set as crossed nicols let an optically active material be introduced whereby the plane of rotation of the light emergent from *P* is rotated. Light will now reach the eye of an observer, and to again obtain the position of total darkness the analyser *A* must be rotated through an angle equal in magnitude and opposite in sign to that through which the plane was rotated by the optically active material. By

---

* It is evident that that part of the prism remote from the face at which light enters could be substituted by a glass prism of suitable refractive index. For prisms constructed of a combination of glass and Iceland spar see Jamin[5] and Sang.[6]

attaching a pointer and circular scale to A this angle can be measured, giving means to determine an unknown concentration of active material when the rotation for one known concentration has been obtained. This combination of two nicols serves to fix the position of the plane of the polarized light emergent from P and also to determine the rotation produced by an active material. It thus forms an elementary type of polarimeter, in which the critical position is that of total darkness.

White and Monochromatic Light.—In the discussion immediately above light *qua* light was mentioned. The statement therein made refers only to a beam of monochromatic or homogeneous light. White light is not homogeneous, but is composed of the spectral colours red, orange, yellow, green, blue, indigo, violet. These components are rotated differently, and hence when an active material is interposed between two nicols, no position of total darkness obtains, since a position crossed with reference to one spectral colour will permit light from all the others to pass. Consequently, on the rotation of one of two nicols, between which is interposed an active material, through which passes a ray of white polarized light, the eye receives in succession the sensation of all the colours of the spectrum. In such a case, however, the position of total darkness can be restored by the interposition of an active material of opposite sign and of the same rotation dispersion as that of the material undergoing examination.

Many textbooks make very confused statements on this matter, and frequently imply that it is the means adopted for obtaining the critical position which determines the kind of light to be used. Actually the determining factor is the means adopted for compensation (*v. infra.*), monochromatic light being capable of compensation by a number of means, whereas white light cannot be compensated by analyser or polarizer rotation, but requires special devices. This error is of special occurrence in descriptions of the Laurent apparatus, which has been regularly built for use with white light since 1882.[14] Similarly, Wild in 1883[15] adapted his instrument for the use of white light.

Critical Positions.—The various critical positions that are or have been in use are described below. Mathematical analysis of the devices is not introduced, for which reference to specialized works or to original papers must be made.

Extinction of Extraordinary Ray.—In one particular position of a natural prism of Iceland spar with reference to an incident beam of light the double image does not appear. This position was used by Biot[2] in the first polarimeter on record as a critical position.

Elimination of other than Red Rays.—If between two nicols an active material such as cane sugar be interposed, the position of total darkness cannot be obtained when white light is employed as the illuminant. On rotation of one nicol the spectral colours in turn appear. Ventzke,[16] in a fundamental paper on sugar analysis, took as a critical position the appearance of the red field as matched against a standard cell of iron anilate.

Total Darkness.—This position has already been described. It is applicable (with rotation compensation) only to homogeneous light, and was first used by Mitscherlich.[17]

Transition Tint.—When a beam of white light is passed through an active material, each of the several spectral components is rotated through a different angle, and in a system made up of parallel nicols and interposed active material those rays rotated 90° do not reach the eye of an observer. A plate of quartz cut perpendicular to the optic axis and 3·75 m.m. thick rotates the yellow rays of white light through 90°, and the remainder combine to form a peculiar pale rose or lilac tint known as the transition tint. The appearance of this tint forms a critical position. The device used to obtain the tint is the Soleil bi-quartz,[18] which is made up of halves of dextro- and levo-rotatory quartz. Such a plate interposed between parallel nicols gives a uniform field of a pale rose tint. Now let a rotation of x° be introduced. In one half of the field the rotation will be $x + a$ degrees, and in the other half $x - a$ degrees where a represents the rotation due to the quartz. Owing to the different rotations assumed by the components of white light, the colour effect transmitted on either side of the field is different, on one side green rays and on the other red rays predominating. The critical position again appears on the interposition of a rotation of $-x^\circ$. If the quartz plate were wholly of the same optical activity the transition tint would again appear at the same position, but then there would be no sharp contrast at positions a little removed from the critical position.

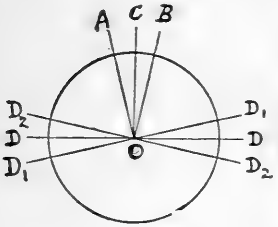

FIG. 289

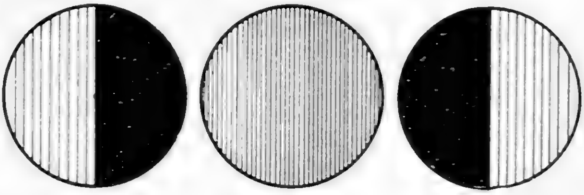

FIG. 290

Half Shadow or Penumbra Devices.*—In *Fig.* 289, let OA and OB represent the vibration planes of two beams of polarized light travelling towards a nicol prism as analyser. Let OD, OD_1, OD_2, represent various positions of the optic axis of the analyser. Thus in the position OD_1 perpendicular to OA the analysing nicol is crossed with reference to OA. Similarly in the position OD_2 all light vibrating in the plane OB is eliminated. When, however, the position OD perpendicular to OC bisecting the angle between the vibration planes is assumed, equal amounts of light are transmitted from either source. By making the angle AOB small, a nicol prism used as analyser will on rotation through the small angle show three well-defined positions, as indicated in *Fig.* 290. In position OD_1 left half dark, right half illuminated; in position OD_2, right half dark, left half illuminated; in position OD, equal illumination throughout. This last is the critical position, and is one of great accuracy; it was devised by Jellett[19] in 1860, for whom the first half shadow prism was made by Bryson, of Edinburgh, and the first half shadow polarimeter by Spencer, of Dublin.

Jellett Half Shadow Device.†—" A rhombic prism of Iceland spar, whose

---

* "Half shadow" has come into use as the term defining these devices as a slavish translation of the German "Halbshatten." Though clumsy, "isophotostatic" would be a better word.

† Most textbooks, evidently quoting from the same source of misinformation, describe as Jellett's a construction quite different from that given by the Irish physicist. They also fail to state that he located the half shadow device in the analyser and not in the polarizer. Jellett's exact wording is quoted above.

long edges should be of length about two inches, or a little more, is cut by two planes perpendicular to those edges, so as to form a right prism as in *Fig.* 291. This prism is divided by a plane parallel to those edges, and making a small angle with the longer diagonal of the base. One of the two parts into which the prism is divided is then reversed, so as to place the base upwards, and the two parts are cemented together as in *Fig.* 292, with the surfaces of section in contact and the ends of the prism thus formed are then ground and polished."

Cornu Half-Shadow Device.[20]—Cornu applied Jellett's principle thus. An ordinary nicol prism is divided into two parts following the plane of the lesser diagonals. Each face of cleavage is then ground down 2½ degrees, after which the two parts are cemented together. A prism with a half-shadow angle of 5 degrees is thus obtained.

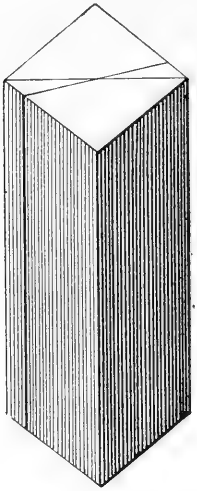

FIG. 291

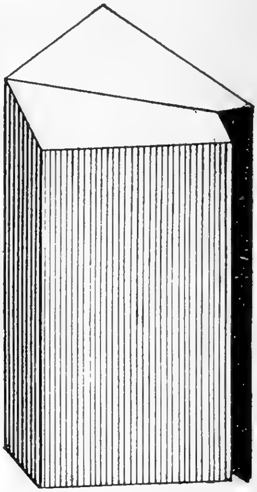

FIG. 292

Schmidt and Haensch Prism.[21]—The German firm of Schmidt and Haensch have employed a prism made thus. The prism of calc spar is divided into two parts by a plane perpendicular to the principal section. One half only is then treated as in Cornu's method, after which the three pieces are united and arranged so that the incident light falls on the undivided half.

The Laurent Half Shadow Device.[22]—The Laurent half shadow polariscope obtains its end point in a manner quite different from the instrument described above. Between the polarizing and analysing nicol of ordinary construction, and close to the former, is interposed a thin plate of active quartz, which is cut parallel to the optical axis of the crystal. A beam of light entering such a plate perpendicular to its surface is doubly refracted into two beams, with vibration planes parallel, and perpendicular to the optical axis. In such a system that ray which vibrates perpendicular to the optical axis has its speed of vibration increased, and the thickness of the plate of quartz is so taken that that ray vibrating perpendicular to the optical axis has gained half a wave length on the wave vibrating parallel to the optical axis at the moment they emerge from the quartz plate. In *Fig.* 293 let the circle represent the diaphragm opening, covered as to one half by the quartz plate, and let the optical axis of the plate be represented by the line *o b*; let *o a* represent the amplitude of vibration and the plane of polarization of the light coming from the polarizing nicol. On meeting the quartz plate this ray is resolved into two rays, *o b* and *o e*, parallel and perpendicular to the optical axis of the quartz plate; on emerging from the quartz plate the ray *o e* has gained half a wave length on the ray *o b*, and is now represented by the line *o d*. These two rays can be compounded into the ray *o c*, precisely as if the field of vision was illuminated by the rays *o a* and *o c*, symmetrically arranged with respect to the optical axis of the quartz plate. The effect of this is to obtain a field of vision exactly similar to that described in dealing with the Jellett apparatus. The Laurent half-wave plate may take the form of a central disc or of a ring. In the former method one position of unbalance appears as in *Fig.* 294, a tripartite field shown in *Fig.* 295 as unbalanced obtaining in the latter case.

Poynting Half Shadow Device.[23]—This consists of a plate of quartz cut perpendicular to the optic axis, and of which one half is very slightly reduced in thickness. As a means of obtaining variable sensibility it is suggested that a scheme involving the principle of the Soleil-Duboscq compensator (*q.v.*) could be used. A simpler means yet consists of a cell filled with some active material, the horizontal depth of which is reduced as to one half by inserting in the cell a thin glass plate. The effect produced by this device is similar to other half shadow contrivances.

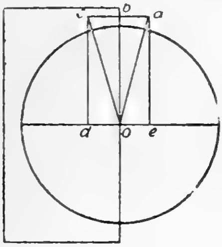

FIG. 293

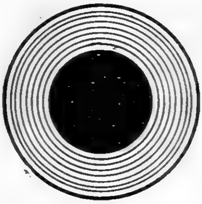

FIG. 294

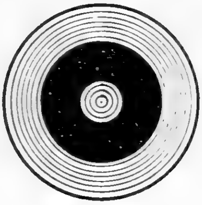

FIG. 295

Horsin-Déon Device.[24]—This instrument is of different construction from any of those previously described. The light passes through a Jellett prism, and then through a plate of dextro-rotatory quartz rather more than 4 mm. thick; the effect of this is to produce a blue field on the left and a pale yellow field on the right. The compensator is a wedge of levo-rotatory quartz, behind which is placed a disc of levo-rotatory quartz, the effect of which is to produce a final tint rather darker than the sensitive tint of the colour polariscope. The field of view of this instrument in positions remote from the zero position is that one half is colourless, and the other coloured in all colours of the spectrum. Near the zero position the colourless half becomes tinted before the other half loses its colour; at the zero position, the field of view is a uniform field, similar to that of the half shadow instruments.

The Lippich Half Shadow Device.[25]—This device obtains its half shadows by the interposition of a small Nicol prism between the polarizer and the analyser, as shown in *Fig.* 296.[12] The half nicol is so fixed that its edge, *c*, lies in the axial plane of the apparatus, and divides the field of vision into halves. Let the principal sections of the two prisms make an angle with each other. Light passing through the large nicol, *a*, and through the open part of the field, vibrates vertically to the principal section of that prism. Of the rays that pass through that half of the field covered by the half nicol, only those pass that vibrate vertically to the principal section. A field of vision is thus obtained made up into two halves, in which the planes of polarization are inclined at a small angle to each other, and the effect is precisely as described when dealing with the other forms of half shadow instruments. In this instrument the analysing nicol is not set parallel to the polarizing nicol, but makes with the polarization direction of the half nicol a larger angle than it does with that of the large nicol, so as to correct for the absorption of light which occurs in the passage through the small nicol. As in the Laurent instrument, a tripartite field can be obtained by the use of a second half nicol, the appearance of one position of an unbalanced field being shown in *Fig.* 297.

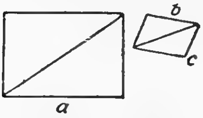

FIG. 296

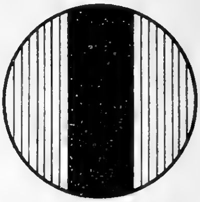

FIG. 297

Interference Devices.—In the passage of plane polarized light through certain optical combinations, well-defined visual phenomena due to the interference of light result. These phenomena in combination with polarizer and analyser may be made to fix the position of the plane of polarization. The Savart polariscope[26] consists of two sections of calc spar, each 3 mm. thick, and cut at an angle of 45 degrees to the optic axis of the crystal. The sections are finally cemented together, so that the principal sections cross at right angles. If this device be arranged between parallel nicols a number of horizontal bands or interference fringes occupy the field, as shown in *Fig.* 298. When the principal section of the analyser forms an angle of 45 degrees with the crossed sections of the Savart plate, and when the principal plane of the polarizer is parallel with one of the crossed planes, the field of vision is as in *Fig.* 299, and this is taken as the critical position.

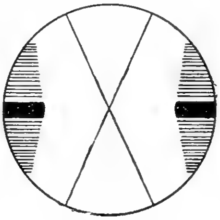

FIG. 298

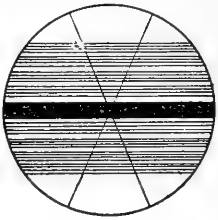

FIG. 299

Crossed spider lines arranged in the instrument aid in giving definition to the critical position. This device is used in Wild's polarimeter.

The Sénarmont polariscope[27] is a composite plate of quartz made up of four similar right-angled wedges of this material. The wedges are united two and two along their hypotenuses, and are cut in such a manner that light enters and leaves by surfaces perpendicular to the optic axes. Each of the four wedges which make up the plate is opposed vertically and horizontally by a fellow-wedge of opposite optical activity. When mounted between two nicols interference bands are seen. With parallel nicols the bands take the form shown in *Fig.* 300, but in all other positions the lines in the upper and lower parts of the field are not continuous, as in *Fig.* 301. This device is used in an instrument of Trannin,[28] and in another by Duboscq and Duboscq.[29]

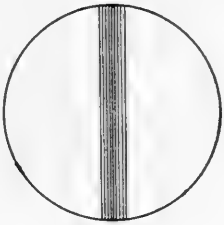

FIG. 300

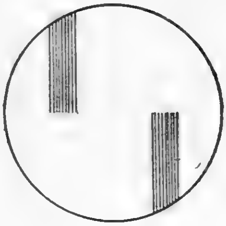

FIG. 301

Compensation.—By compensation in polarimetry is meant the means adopted to restore the plane of polarization to that originally occupied at zero of the scale connected with the compensation device.

Rotation compensation.—The most direct, accurate, and simple means of compensation lies in rotation of the analyser (or polarizer) through an angle equal in magnitude but opposite in sign to that through which the plane has been rotated by the active material whose rotation is being observed. This means is used in those instruments which employ monochromatic light, but is inapplicable to those using white light unless the rotation to be measured is very small. The analyser is the element usually rotated, and to it is attached an alidade moving over a graduated circle, whence is read off the rotation required to effect compensation.

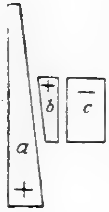

FIG. 302

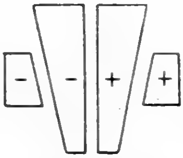

FIG. 303

Introduction into Field of Opposed Rotation.—This means is used in the quartz wedge compensator of Soleil and Duboscq[30]. It consists of a device whereby a variable thickness of active quartz may be interposed and a rotation, equal in magnitude and opposite in sign to that due to the active material, introduced, so that the critical position again appears. It consists, *Fig.* 302, of a plate of levo-rotatory quartz, *c*, and of two wedges of dextro-rotatory quartz, *a* and *b*. By means of a rack and pinion gear, one of the wedges is capable of being slid past the other, so that the combined thickness of the system is capable of being varied. On the moving wedge is fixed a scale graduated in single degrees from 30 to 105°, and on the fixed plate of quartz is mounted a vernier. When the scale is at zero, the combined thickness of the dextro-rotatory wedges *a* and *b* is equal to that of the levo-rotatory plate *c*, so that the effect of the system is zero. By sliding the scale towards the 100-point, a diminished thickness of dextro-rotatory quartz is introduced, so that the effect of the system is levo-rotatory, and, in instruments designed for sugar analysis, at the 100-point exactly neutralizes the rotation produced by the normal weight of sugar dissolved in 100 c.c., and observed in a 20 cm. tube*.

The double compensator is a development of this device. In this arrangement two sliding wedge compensators are fitted to the instrument. The milled head controlling one is coloured black, and the other red. The observation is made in the usual way with the black compensator. The active solution under analysis is then removed, and neutrality obtained by adjusting the red compensator. The readings on the red and black scales should be identical, practically demonstrating the accuracy of the reading, for it is very unlikely that an identical error should be made twice running, or that both compensators should possess the same error in construction. The arrangement of the wedges is shown in *Fig.* 303.

Saccharimeters are usually only provided with a scale reading to —30°; with this device, by setting the zero of the red scale to the right, negative readings of any value can be obtained.

In instruments with single wedge compensation, negative readings of magnitude greater than the scale permits may be obtained by inserting in the path of the light a known positive rotation conveniently afforded by a quartz plate.

It is evident that the validity of this appliance depends on the nearly equal rotation dispersion of quartz and of cane sugar.

Equalization of a Fixed Rotation.—Between the polarizer and the analyser permanently set in the critical position is introduced a fixed and known rotation of sign opposite to that of the material being determined. The material being examined is contained in a graduated and telescopic tube the length of which is varied until balance is obtained. The observed length of tube gives data to calculate the rotation of the unknown material reduced to unit concentration and to standard length of tube. This device was used by Jellett[31] and by Trannin[28].

Optical Arrangements of Saccharimeters.—The arrangements of these instruments from the time of Biot onwards are illustrated in *Figs.* 304-315. The systems of lenses are not shown so as to avoid confusion.

---

* It is somewhat confusing to appreciate the function of the analyser in instruments using the quartz wedge system of compensation. In these instruments its function is to obtain a critical position acting in combination with the polarizer. When monochromatic light is used it not only does this but serves as a means of measuring the rotation. Conversely, quartz wedge compensation could be used, if so desired, with monochromatic light.

FIG. 304

FIG. 305

FIG. 306

FIG. 307

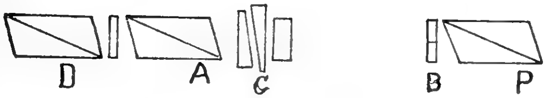

FIG. 308

FIG. 309

FIG. 310

FIG. 311

FIG. 312

FIG 313

FIG. 314

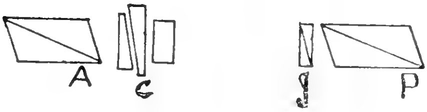

FIG. 315

Biot.[2]—*P.* Mirror affording polarized ray by reflection. *A.* Bi-refractive achromatized prism compensating by rotation, extinction of the extraordinary ray forming the critical position. *Fig.* 304.

Mitscherlich[15]—*P.* Polarizing nicol. *A.* Rotating nicol serving as analyser and compensator, used with total darkness as critical position with monochromatic light and with appearance of red field as critical position with white light. *Fig.* 305.

Robiquet[32].—*P.* Polarizing nicol. *B.* Soleil biquartz. *A.* Rotating nicol serving as analyser and compensator. Used with transition tint as critical position, and with white light. *Fig.* 306.

Soleil-Duboscq.—*P.* Polarizing nicol. *B.* Soleil biquartz. *A.* Analysing nicol. *C.* Quartz wedge compensator. *D.* Colour compensator consisting of a nicol prism and a plate of quartz. This instrument was designed for white light and used 16·35 grams as normal weight. It was the first instrument of a high degree of accuracy. *Fig.* 307.

Soleil-Ventzke-Scheibler.—In the hands of German opticians this last instrument took on the arrangements seen in *Fig.* 308, the only changes being the position of the colour compensator and of the normal weight to 26·048 grams.

Jellett.[31]—*P.* Polarizing nicol. *E.* Levo-rotatory material of known rotation. *F.* Graduated telescopic tube to contain sugar solution, the adjustment of the length of which serves to compensate the rotation due to *E.* *A.* Analysing half shadow prism. White light was used with this instrument. *Fig.* 309.

Wild[32].—*P.* Polarizing prism also serving as compensator by rotation. *G.* Savart polariscope. *H.* Crossed spider lines. *A.* Analysing nicol. This instrument was designed originally for monochromatic light and by the addition of the Soleil-Duboscq compensating system becomes adaptable for white light.[15] The normal weight is 10 grams. *Fig.* 310.

Cornu[20].—*P.* Half shadow prism. *A.* Analysing prism also serving as compensator by means of rotation. Designed for use with monochromatic light and 16·35 grams normal weight. *Fig.* 311.

Precisely as the Soleil-Duboscq instrument with a changed normal weight became in the hands of German firms, the Soleil-Ventze-Scheibler, so this, with the additional change of the quartz wedge compensating prism, became the standard design of German houses.

Laurent[22].—*P.* Polarizing prism, in the older designs Foucault's modification of the nicol being used. *I.* Half wave plate of quartz. *A.* Analysing nicol serving as compensator. In this instrument the half shadow angle is capable of adjustment by rotation about its longitudinal axis with variation in the sensibility and amount of light admitted. Many instruments are sent out with quartz wedge compensation system in addition to the compensating analyser. *Fig.* 312.

Trannin[28].—*P.* Polarizing prism. *J.* Sénarmont polariscope arranged at zero of scale so as to be out of adjustment equal to the rotation produced by 10 cm. layer of a 10 per cent. sugar solution. *F.* Telescopic graduated tube serving as compensator through adjustment of length. *Fig.* 313.

Duboscq and Duboscq[29].—*P.* Polarizing nicol. *J.* Sénarmont polariscope. *C.* Quartz wedge compensator. *A.* Analysing nicol. *Fig.* 314.

Lippich.—*P.* Lippich modification of nicol prism. *K.* Half prism serving to give half shadow. *C.* Quartz wedge compensating system shown as a double system. *A.* Analysing nicol. *Fig.* 315.

Adjustable and Fixed Half-Shadow Angles.—In the original types of polarizer the half-shadow angle is fixed, and generally lies between 5° and 8°. Jellett himself in the first half-shadow analyser used a 7° angle. The instrument of Laurent is sent out with an arrangement such that the angle can be varied, and the same is true of instruments designed for general use; but apart from the Laurent type, sugar instruments have usually a fixed angle. The advantage of the variable angle is that with light-coloured solutions a small angle and low intensity of light can be used giving superior sensibility. With dark solutions and a greater angle more light can be transmitted, facilitating their observation.

Landolt[34] asserts that with technical instruments a fixed half-shadow angle should be employed, since with every change of angle there is a change in the zero which requires adjustment. While this reasoning may be correct with regard to chemists of a certain mental type, it is quite inapplicable to others of a superior intelligence.

The instrument of Bates[35] as built by Fric, is provided with means to vary the half shadow dependent on the colour of the solution under analysis and this with automatic adjustment of the change in the zero.

Source of Light used in Polarimetry.—Measurements of academic interest are always made with monochromatic light. That first used was obtained from a bead of a sodium salt incandescing in a bunsen flame; such light is not spectrally pure and a closer approximation to homogeneity is obtained by filtration through a cell of potassium bichromate, to which Landolt[36] later added a cell of uranous sulphate; such measurements are referred to as $[\alpha]_D$. More recently measurements are made with spectrally pure light obtained by passing the light from a mercury vapour lamp through a prism. Such measurements are referred to as $[\alpha]_{Hg}$. Although homogeneous light may be, and is, used in saccharimetry, it is more convenient to employ white light and such light before use should be filtered through a cell of potassium bichromate such that percentage of salt × length of cell in cms. equals 9. Such light has a mean wave length of 600 $\mu\mu$ and to it the 100-point of the sugar scale is referred. Error may be introduced by neglect of filtration, and, for example, Schönrock[37] found a rotation of 100·12 with unfiltered as compared with 100 for filtered light. The difference varies with the eye of the observer and is probably connected with the pigmentation of the eye.

The actual light used may be a flat-wick kerosene lamp, a fish-tail coal gas or acetylene burner, the Welsbach mantle or any form of electric light. The writer prefers a concentrated filament nitrogen-filled tungsten light of 50 c.p. The Welsbach and electric light require the interposition of a dispersing surface to eliminate the image of the mantle or filament. Ground glass is usually employed, and in its absence colourless transparent paper, which may even be represented by a grease spot, serves well.

In instruments of German design the light filter is inconveniently placed within the instrument and difficult of access. It should be located without the instrument, and between it and the source of light. It may be carried on an extension rod or on a separate stand. No objection lies to its replacement by a glass light filter giving a light of the same wave length as that specified.

Polarimeter Tubes.—The older form of polarimeter tube is shown in *Fig.* 316. It consists of a glass or metal tube with the ends ground exactly flush and parallel. On either end a screw thread is cut. To fill the tube, a glass disc is placed on one end and secured by the cap. The tube is filled in a vertical position and the second glass disc slid over the end and the emergent meniscus, avoiding the formation of an air bubble. The disc is then secured in position by a second cap.

FIG. 316

A second form of tube, *Fig.* 317, uses sprung metal caps for securing the glass discs in place.

The latest form of tube, *Fig.* 318, has an enlarged end into which an air bubble may be directed, outside of the field of vision. This form is very convenient since, when making a series of observations, the tubes may all be placed in a row with the enlarged ends together; if the tubes be systematically reversed when read, the observer knows the one last read in case of interruption.

FIG. 317

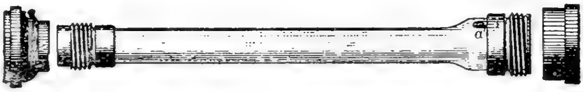

FIG. 318

Another form, *Fig.* 319, eliminates the annoyance of the air bubble by means of a cavity blown in the glass. It also affords means for the identification of a particular tube in a series. This tube rests on shoulders and not on the caps, a method due to the U.S. Bureau of Standards[37].

The Laurent instruments are supplied with bayonet-fastening spring caps.

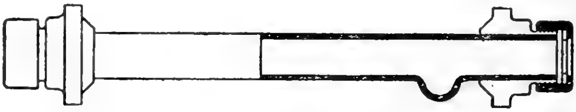

FIG. 319

The continuous tube of Pellet[38] is a great time-saving device. One method of using the tube is shown in *Fig.* 320. The material under examination is poured into the reservoir *a*, whence it flows through the tube displacing material already contained therein. By mounting a T-syphon, *b*, as indicated at the delivery end, the flow automatically stops when the level *c* is reached. This appliance is most useful when many consecutive readings on materials of about the same density have to be made. In fitting up the appliance, it is convenient to arrange a cradle alongside the trough of the polarimeter to hold the Pellet tube whenever an ordinary tube is brought into use.

The tubes used for materials when temperature control is important, as in the reading after inversion, are water-jacketed and are supplied with a tubulure for the insertion of thermometer and stopper, as indicated in *Fig.* 321.

Tubes are found made of both glass and metal. The former must be used for acid materials and is preferable on the grounds of smaller expansion. In addition, metal tubes may become bent, due to rough use, without the damage being observed. The life of a glass tube is shorter than that of a metal tube, but fracture is only due to avoidable carelessness.

FIG. 320

Polarimeter tubes are supplied in lengths of 2.5 cms., 5 cms., 10 cms., 20 cms., 22 cms. (for elimination of calculation in certain routine dilutions) 40 cms. and 60 cms. The Laurent instruments are usually built to accommodate, and are supplied with, a 50-cm. tube.

The diameter of a tube should be larger than that of the diaphragm through which the pencil of light passes, so as to avoid depolarization due to internal reflection, and the glare which accompanies a tube of smaller diameter. Bates adopts 9 mm. as a convenient diameter.

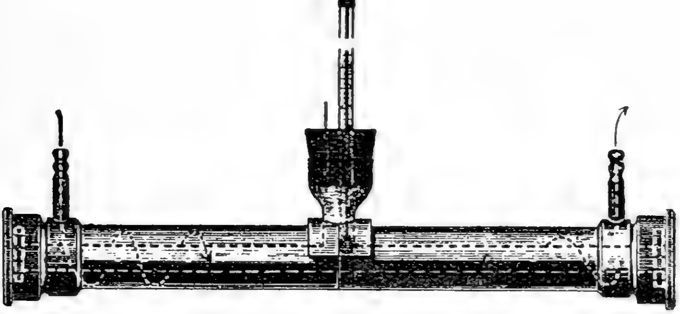

FIG. 321 J H W

Convenience in Observation.—A dark room, or cabinet enclosing the instrument, with source of light located externally is usually advised. In place thereof the writer finds the use of a shield of the form shown in *Fig.* 322 very effective to cut off extraneous light.

Polarimeter Scale.—The scale of the polarimeter is usually mounted on the moving wedge of the compensator. The vernier is stationary. The scale is either made of some alloy as nickelin, the expansion of which is low, or of invar, the expansion of which is zero. In some patterns the scale is made of glass, and in others it is engraved on the quartz wedge. The appearance of the scale is as in *Fig.* 323, where the reading is 26.7.

Control of the Scale.—Quartz plates, the exact value of which has been determined in sugar degrees, may be obtained from makers. These plates are standardized at 20° C. in Europe, and as they are equally affected by variation of temperature with the quartz wedge, they will serve at any temperature to control the scale of a polarimeter of this type; but, if used to control the scale of a polarimeter compensating by rotation of the analyser, the correction for temperature must be applied.

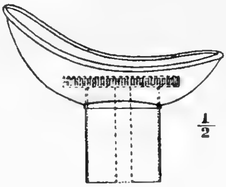

FIG. 322

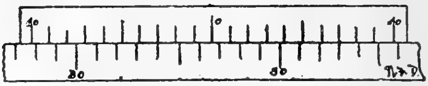

FIG. 323

A control observation tube by Schmidt and Haensch is shown in *Fig.* 324; it consists of an outer tube, *T*, in which is moved by means of a rack-and-pinion gear the tube *f*, fitting closely into *T*, exit of liquid between *T* and *f* being prevented by the washer *e*: the tube *f* is closed by a glass disc at *c*. The solution to be used for testing is poured into the funnel *a*, whence it fills the tube *T*. The distance between *d* and *e* is regulated by the rack-and-pinion gear, the exact distance and also the length of the column of liquid being read off a scale carrying a vernier; the tube is conveniently filled with a solution of the normal weight of sugar in 100 cc.; with a column of liquid 20 cm. long a reading of 100 should be obtained, and other readings should be proportional to the length of the column of liquid. A very rapid control over the scale can thus be obtained. Of course, the scale can also be tested by polarizing different weights of pure sugar in a tube of constant length, but this, compared with the adjustable control tube, is a laborious operation.

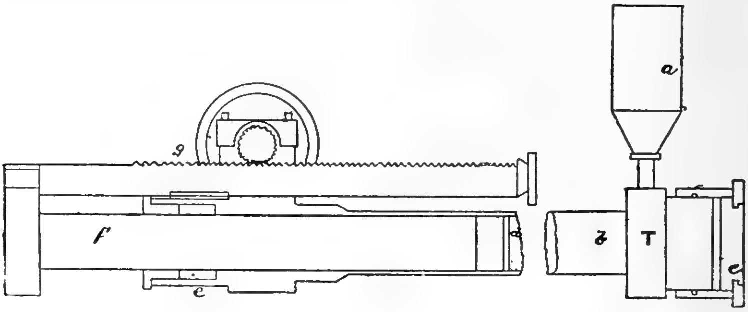

FIG. 324

REFERENCES IN CHAPTER XXIV.

1. Phil. Trans. Roy. Soc., 1818, 125.
2. *An. Chim. Phys.*, 1840, 74, 428.
3. *Edinburgh New Philosophical Journal*, 1829, 6, 83.
4. *Edinburgh New Philosophical Journal*, 1831, 14, 372; 1839, 27, 332.
5. *C.R.*, 1869, 68, 221.
6. Proc. Roy. Soc., Edin., 1891, 83, 323.
7. Repertorium für physikalische Tecknik, Carlsberg, 1, 325; 2, 217.
8. *C.R.*, 20, 1805.
9. *Phil. Mag.*, 1881, 12, 349.
10. Repertorium für physikalische Tecknik, Carlsberg, 16, 570; 17, 195.
11. *Zeit. für Instr.*, 1892, 2, 167; 1906, 14, 326.
12. *Phil. Mag.*, 1883, 15, 252.
13. *Zeit. für Instr.*, 1894, 4, 41.
14. *C.R.*, 94, 442.
15. St. Petersburg Academy, Scientific Bulletin, 1883, 28, 407.
16. Erdmann's Journal für practische Chemie, 1842, 25, 65.
17. Lehrbuch der Chemie, 1844, 3, 36.
18. *C.R.*, 1845, 50, 105.
19. Proc. Roy. Irish Academy, 1863, 7, 348.
20. *Bull. Assoc. Chim. Suc.*, 1870, 14, 140.
21. "Optical Rotation of Organic Substances."
22. *C.R.*, 86, 662; 89, 665.
23. *Phil. Mag.*, 1880, 10, 18.
24. *Bull. Assoc. Chim. Suc.*, 1902, 19, 601.
25. *Zeit. für Natuurwissenschaft*, 30, 45.
26. Poggendorf's Annalen, 1840, 49, 292.
27. *An. Chim. Phys.*, 1857, 50, 480.
28. Assoc. Française pour l'Avancement de Science, 1885, 105.
29. *Jour. de Phys.*, 1886, 5, 274.
30. *C.R.*, 49, 248.
31. Proc. Roy. Irish Academy, 1864, 8, 279.
32. "Optical Rotation of Organic Substances."
33. Poggendorf's Annalen, 1864, 122, 626.
34. "Optical Rotation of Organic Substances."
35. U.S. Bureau of Standards, Bull. 44.
36. *Zeit. für Instr.*, 1892, 2, 340.
37. *Zeit. Ver. deut. Zuck.*, 54, 521.
38. *Bull. Assoc. Chim. Suc.*, 1892, 551.

CHAPTER XXV

THE DETERMINATION OF CANE SUGAR AND THE ASSAY OF SUGAR HOUSE PRODUCTS

THE routine analyses necessary for the control of a cane sugar-house comprise the determinations of :—Specific Gravity, Soluble Solids, Water, Polarization, Sucrose, Reducing Sugars, Fibre, Ash, Acidity and Alkalinity. Other specialized determinations are mentioned separately. The bearing of these determinations on the control and other inter-relations is discussed in this chapter, together with the means adopted for their execution.

Specific Gravity, Degree Brix, Soluble Solids, etc.—The specific gravity, or density, of a material is used for determining the solids in solution referred to a sucrose-gravity basis. Thus a 16 per cent. solution of sucrose in water, as determined at 20° C. and compared with water at 4° C. as unity is of specific gravity 1·06346. A sugar-house material of this specific gravity is said to contain 16·0 per cent. soluble solids, or to be of 16·0 degrees Brix.*

Other synonymous terms are *total solids* and *apparent dry substance*. The writer has used the term *gravity solids*, as thereby confusion as to the basis of reference is avoided.

In place of deducing the apparent dry substance from the specific gravity, the refractive index has also been used. Thus the refractive index at 28° C. compared with water at 28° C. of a 16 per cent. solution of sugar is 1·3562, and a sugar-house material with this refractive index is said to have 16 per cent. apparent dry substance, or total solids. The term used by the writer is *refractive solids*, and the expression *optical solids* is also in use. The introduction of this method is due to Main.[1] The real dry substance in solution is determined by drying to constant weight. The results of determinations made in this way are referred to as *total solids*, *true total solids*, or *dry substance*. The term used by the writer is *absolute solids*.

The relation between the three bases of comparison is as under :—

Gravity solids > Refractive solids > Absolute solids, and the difference is found to increase with the quantity of non-sugar, particularly salts in solution. Reducing sugars have almost the same solution factor as cane sugar, and the difference is not great for other organic bodies which occur in sugar-house materials.

---

* Brix is the name of the German chemist whose determinations of the relation between sugar per cent. and specific gravity of solutions are generally accepted. Previously the degree Balling, named after an Austrian chemist, was used. The principle involved is the same and the differences are very small. In France the degree Vivien is used. This gives, referred to a sucrose basis, the grams soluble solids per 100 c.c. of material. Hence Degrees Brix × Specific gravity = Degrees Vivien.

The definition of the gravity solids, or degree Brix, or of the refractive solids, presents no difficulty when the material is examined in its original condition. If the bodies present, other than sugar, gave the same relation between dilution and specific gravity as does sucrose, the dilution at which a determination is made would be a matter of indifference. On experiment, however, the following relation[2] is found to hold for impure solutions :—

If from an impure sugar solution containing q per cent. gravity solids, or refractive solids, dilutions be made containing Q_1 per cent., Q_2 per cent., etc., of the original material, and if these solutions contain q_1 per cent., q_2 per cent., etc., gravity or refractive solids, and if $Q_1 > Q_2 > Q_3$, then :—

$$\frac{q_3}{Q_3} > \frac{q_2}{Q_2} > \frac{q_1}{Q_1} > \frac{q}{100}$$

On the other hand, the absolute solids are independent of dilution, as are also the gravity and refractive solids of solutions of cane sugar. This follows from the definition.

The gravity solids and refractive solids in a solid or in a semi-solid solution can only be obtained after a controlled dilution, and, following on the above statement, different results will be obtained dependent on the dilution. Experiments made by the writer gave the results tabulated below. The method of calculation used was as follows :—A syrup was of density 1·35643 at 27·5° *C.*/27·5° *C.*; it thus contained 71·290 per cent. gravity solids; a 63·701 per cent. solution of this syrup was of density 1·206798 at 27·5° *C.*/27·5°*C.* and hence contained 45·609 per cent. gravity solids. Calculated back, the original material contained (45·609/63·701) × 100 = 71·598 per cent. gravity solids.

The variation in the degree Brix, or gravity solids, and of the refractive solids in a raw sugar, a syrup and a molasses, as affected by dilution, is shown in the following tables.

VARIATION IN "SOLIDS" IN A RAW CANE SUGAR WITH DILUTION AS CALCULATED FROM THE OBSERVED SOLIDS AT THE STATED DILUTION.

THE RAW SUGAR CONTAINED 99·005 PER CENT. ABSOLUTE SOLIDS, 96·30 PER CENT. SUGAR, AND 0·55 PER CENT. ASH.

Raw Sugar per cent. in solution.	Gravity solids per cent. of solution.	Refractive solids per cent. of solution.	Calculated gravity solids per cent. of raw sugar.	Calculated refractive solids per cent. of raw sugar.	Absolute solids per cent. of solution.	Absolute solids per cent. of raw sugar.
100·000	—	—	—	—	99·005	99 005
67·418	67·292	66·91	99·814	99·24	66·747	,,
59·513	59·413	59·09	99·832	99·27	58·921	,,
48·500	48·529	48·26	99·854	99·30	48·118	,,
37·875	37·834	37·63	99·892	99·35	37·499	,,
30·222	30·198	30·05	99·922	99·43	29·921	,
22·994	22·894	22·89	99·957	99·55	22·766	,,
18·131	18·168	18·07	100·208	99·68	17·950	,,
13·490	13·562	13·46	100·534	99·80	13·356	,,
9·944	10·043	9·94	100·936	99·93	9·846	,,
5·835	5·940	5·85	101·799	100·26	5·777	,,
3·850	3·930	3·87	102·401	100·53	3·812	.

VARIATION OF "SOLIDS" OF A CANE SYRUP WITH DILUTION AS CALCULATED FROM THE OBSERVED SOLIDS AT THE STATED DILUTION.

THE SYRUP CONTAINED 69·233 PER CENT. ABSOLUTE SOLIDS, 60·44 PER CENT. SUGAR, AND 1·73 PER CENT. ASH.

Syrup per cent. in solution.	Gravity solids per cent. of solution.	Refractive solids per cent. of solution.	Calculated gravity solids per cent. of syrup.	Calculated refractive solids per cent. of syrup.	Absolute solids per cent. of solution.	Absolute solids per cent. of syrup.
100·000	71·290	70·35	71·290	70·35	69·233	69·233
90·834	64·824	64·05	71·365	70·51	62·887	,,
77·141	55·442	54·52	71·473	70·68	53·407	,,
63·701	45·609	45·13	71·598	70·84	44·102	,,
48·120	34·513	34·12	71·723	70·91	33·314	,,
38·547	27·679	27·37	71·806	71·00	26·687	,,
25·909	18·665	18·41	72·040	71·09	17·938	,,
13·334	9·641	9·52	72·303	71·37	9·232	,,
8·108	5·997	6·86	73·960	71·53	5·613	,,
4·685	3·482	3·38	74·322	72·15	3·243	,,
3·258	2·472	2·40	75·899	73·69	2·256	,,

VARIATION OF "SOLIDS" OF A MOLASSES WITH DILUTION, AS CALCULATED FROM OBSERVED SOLIDS AT THE STATED DILUTION.

THE MOLASSES CONTAINED 76·630 PER CENT. ABSOLUTE SOLIDS, 31·91 PER CENT. SUGAR, 16·43 PER CENT. REDUCING SUGARS, AND 11·13 PER CENT. ASH.

Molasses per cent. in solution.	Gravity solids per cent. of solution.	Refractive solids per cent. of solution.	Calculated gravity solids per cent. of molasses.	Calculated refractive solids per cent. of molasses.	Absolute solids per cent. of solution.	Absolute solids per cent. of molasses.
100·000	84·040	80·0	84·040	80·0	76·630	76·630
92·354	77·902	—	84·460	—	70·770	,,
88·079	73·778	—	84·736	—	67·494	,,
84·180	71·558	—	85·025	—	64·507	,,
77·042	65·700	—	85·278	—	59·037	,,
70·188	60·118	—	85·653	—	53·785	,,
63·019	54·112	51·0	85·866	81·0	48·291	,,
54·317	47·100	—	86·709	—	40·624	,,
46·473	40·170	—	86·438	—	35·612	,,
39·022	33·923	—	86·900	—	28·309	,,
30·894	27·291	—	87·338	—	23·674	,,
23·696	20·826	19·43	87·973	82·0	18·158	,,
16·568	14·663	13·63	88·501	82·3	12·696	,,
13·167	11·674	10·30	88·739	82·8	10·080	,,
7·034	6·261	5·85	89·014	83·1	5·390	,,
3·467	2·998	2·83	89·390	83·9	2·656	,,

Purity.—By the expression "Purity" is meant the value of the expression (Sugar per cent./Solids per cent.) × 100. Depending on whether the Polarization or the sucrose per cent. is used as the numerator in this expression, and whether the solids are absolute, gravity or refractive, six values may be found. Generally the term "purity" without any qualification is taken to mean the ratio (Polarization/Gravity solids) × 100. This expression is often further identified by the use of the adjective *apparent*. The ratio (Sucrose per cent. /Dry Substance) × 100 is usually termed the *true purity* or *real purity*. The writer uses the terms *gravity purity*, *refractive purity* and *absolute purity* when referring to determinations of sucrose, qualifying these expressions with the term *polarization* when the sucrose per cent. is not determined. The *apparent purity* is thus equivalent to the *polarization gravity purity* and the *true purity* to the *absolute purity*. Following on the results quoted in the preceding section, the gravity and refractive purities will vary with the dilution at which the observations are made. This point is of importance in the calculation of the *available sugar*.

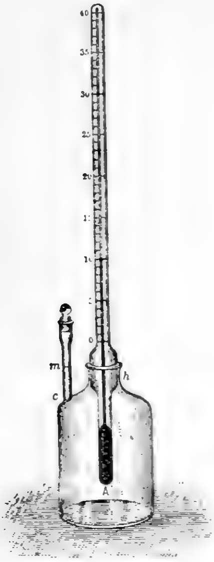

FIG. 325

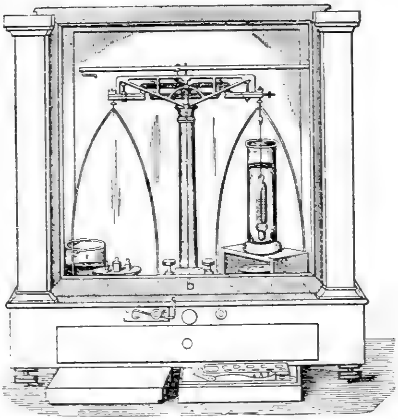

FIG. 326

Determination of the Specific Gravity or Degree Brix.—Three methods are in use :—1. Direct comparison of the weight of the material with the weight of an equal quantity of water. 2. Comparison of the weights of a substance when weighed in water and when weighed in the material. 3. By observation of the position of equilibrium of an empirically graduated instrument called an hydrometer, when immersed in the material.

1. This method is carried out with the pycnometer, or specific gravity bottle, shown in *Fig.* 325. The weight of the bottle when clean and dry is obtained. It is then filled with distilled water, the ground glass stopper is inserted, and the excess water forced out through the side tube. It is well to reduce the temperature of the water, or other material, below the temperature at which the observation is to be made. On gradually reaching this temperature, a little liquid will exude from the side tube, which may be removed with a piece of absorbent paper. The cap is then placed on and, after wiping dry, the weight of the bottle and water is obtained, whence follows the weight of water contained at a definite temperature. A similar

process gives the weight of an equal volume of the material being examined, when the specific purity follows by a simple division, the degree Brix being obtained from reference to tables.

In very exact work all determinations should be made at one fixed temperature, now selected as 20° C. As this is inconvenient in rapid technical work in the tropics, the writer worked as follows:—The mean temperature of a laboratory was 27·5° C. The weight of water in the pycnometer was determined for each tenth degree between 25° C and 30° C. The weight of the juice or other material was determined at whatever temperature obtained at the time of the determination, and was compared with the weight of water at that temperature. The corresponding degree Brix was then taken from a table calculated for 27·5° C/27·5° C. The error introduced by accepting an equal expansion for water and sugar solutions between these limits does not appear till the third decimal place in the degree Brix.

2. A weight is suspended by a thread of silk from the end of an arm of the balance. Its weight is observed in air, in water and in the material under examination. If x, y, z be the weights respectively in air, water and material, the specific gravity of the last is given by the ratio $\frac{x-z}{x-y}$. This method may be employed on any balance as in *Fig.* 326, or the specially designed Mohr-Westphal balance, *Fig.* 327, whereby the specific gravity is read directly from the rider weights used, may be employed.

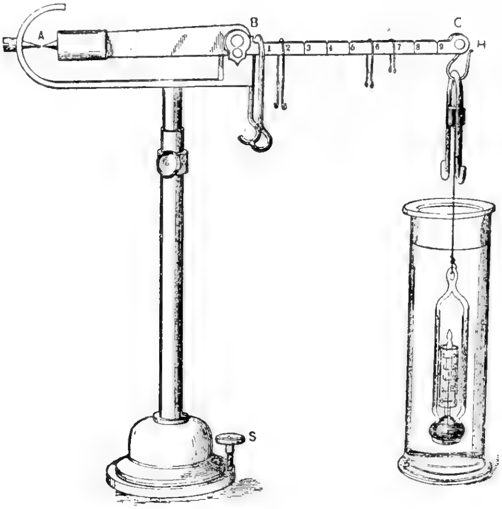

FIG. 327

FIG. 328

3. The hydrometer, *Fig.* 328, consists of a glass tube on which is blown an elongated bulb. Beneath this bulb is a second loaded with lead shot or quicksilver. The upper portion consists of a slender stem, in which is located the scale. When immersed in a liquid, the instrument will sink, or float with

some portion of the stem above the level of the liquid. The Brix hydrometer, which is generally used, is so constructed that the degree indicated at the point where the level of the liquid cuts the stem indicates the solids in solution referred to a sucrose basis.

The principle of graduation of the hydrometer is as follows:—The weight of liquid displaced by the floating instrument is equal to the weight of the instrument. Let w be the weight of the hydrometer and let v be the volume of the portion immersed. Then $d=w/v$ where d is the specific gravity of the solution, and $v=w/d$. For a series of specific gravities, $v_1 = w_1/d_1$, $v_2 = w_2/d_2$, $v_3 = w_3/d_3$ and if $d_1 = d_2 + c = d_3 + 2\,c$ etc., where c is small $v_1 = v_2 + x = v_3 + 2x$ nearly.

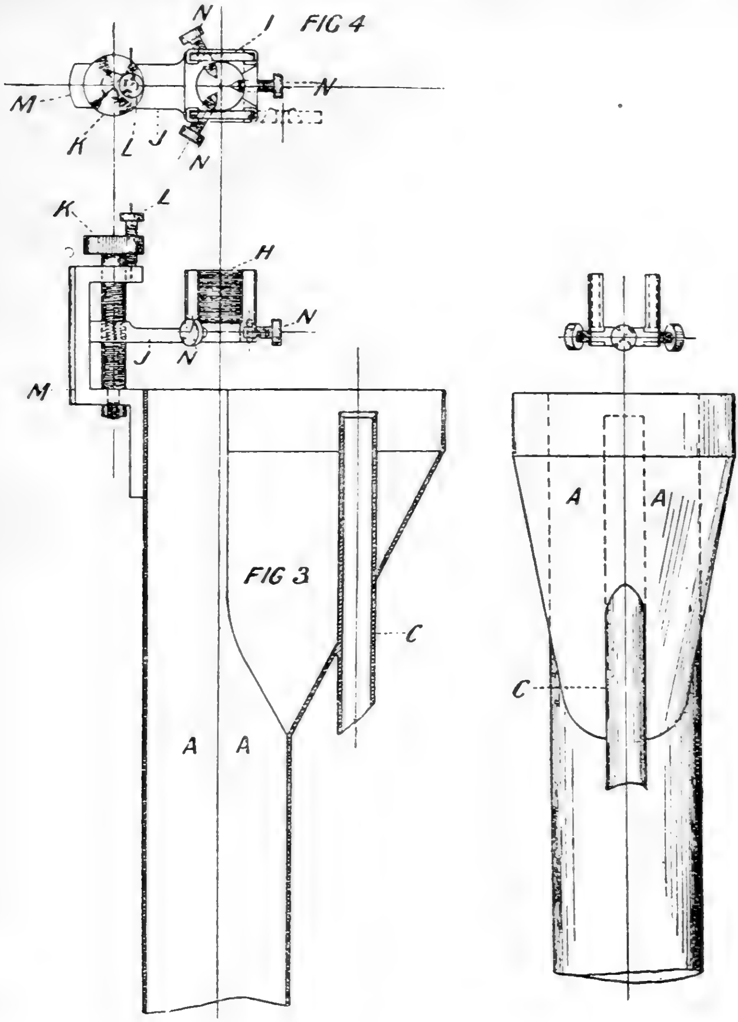

Fig. 329

Hence, for a restricted range the scale on the spindle will be divided into equal portions for each increment in specific gravity or for each degree Brix.

It further follows that the delicacy of the instrument depends on the cross section of the stem, or rather on the relation between cross section of stem and volume displaced by the bulb. The smaller the cross section, the longer will be the division corresponding to each difference in specific gravity, or degree Brix.

In making the determination, the approximate degree Brix is found. The instrument is then removed and the stem wiped dry. It is then immersed in the liquid a very short distance below the approximate degree already observed, allowed to come to rest and the reading again observed. The position observed is the actual level of the liquid and not the level of the meniscus which forms on the stem. A simultaneous observation of the temperature is made and the appropriate correction added or subtracted.

For certain purposes a greater degree of refinement than is obtainable as described above is necessary. With this object in view, the writer has devised the following arrangement, *Fig.* 329.

The cylinder in which the hydrometer floats is provided with a flared-out upper portion. In this is located an interior overflow controlled by a cock. By filling with liquid above this overflow, and allowing the excess of liquid to escape slowly, a constant level can be obtained. The scale of the instrument is read, not at the level of the liquid, but at a known distance, conveniently 1° above this level. One device for obtaining this end consists of a vertical piece of glass with a horizontal scratch opposite to a mirror. This arrangement is carried on a horizontal holder capable of vertical adjustment, and is adjusted until the scratch is exactly 1° above the level of the liquid.* The eye of the observer is levelled so that the scratch and its image are coincident, the point where the former appears to cut the scale being taken as the reading. This can be estimated to 1/100 of a degree and repeated readings to this accuracy can be obtained. The holder also carries three horizontal pointed screws which, when adjusted to a certain point, restrain the instrument in a central position without interfering with its freedom of vertical motion. A portion of the holder is hinged and swings out in a horizontal plane so as to permit of removal of the instrument. The appliance is provided with a charging container filling the cylinder from below, with a discharge cock and with level screws.†

Since hydrometers are seldom accurate to less than 0·05 Brix, that one selected for use with this device must be accurately standardized with the pycnometer. This is best done by ascertaining the degree Brix of the solution used with the pycnometer and adjusting the level of the scratch until it indicates exactly 1° too little.

The hydrometers found in use are standardized as correct at 17·5° C. or 27·5° C‡: that is to say, they indicate the degree Brix correctly at these temperatures. The necessary corrections to be applied when the liquid is at another temperature are given in the Appendix. When the hydrometers are standardized at either 17·5° C. or 27·5° C. the writer understands that the specific gravity of water at these temperatures is taken as unity.

The general feeling of chemists is to abandon all these standards and to adopt a temperature of observation of 20° C. compared with water at 4° C., but the writer has seen no spindles based on this system yet in use.

---

* Alternatively, specially graduated hydrometers incorrect when referred to the liquid level may be used.

† The complete apparatus, termed a "Brixometer," is sold by the Sugar Manufacturers' Supply Co., Ltd., 2 St. Dunstan's Hill, London, E.C.3.

‡ French practice still retains 15.6° C. as a basis of reference. In the British West Indies 84° F. is used.

Brix spindles, as purchased from reliable dealers, are generally of considerable accuracy. Nevertheless, each instrument should be standardized. This is most readily done by reserving one special set as a carefully checked standard against which newly purchased instruments can be compared.

Special Points in connection with Sugar House Products.—Raw juices from the mills carry in suspension much solid matter and are also emulsioned with air. As a preliminary, they should be strained through gauze, allowed to stand for some time to allow the heavy particles to subside and the air and lighter solid particles to rise. The intermediate portion may then be drawn off into the cylinder in which the observation is made. A vessel with a cock located about two inches from the bottom is convenient and this vessel should contain two to three times the volume of the cylinder. Molasses and massecuites cannot be observed directly. The usual convention for process control is to dilute with an equal weight of water, observe the Brix of the diluted material and multiply by two. This determination is of sufficient exactitude for controlling the manufacturing processes, but it does not give exact data to determine the "weight per cubic foot."

When the density of the undiluted material is required, the following procedure may be adopted:—

A large wide-mouthed vessel of the shape shown in *Fig.* 330 is constructed of copper or brass, or even a wide-mouthed bottle may be employed. The mouth of the vessel is best formed sloping inwards, so that a stopper may be ground accurately to fit this mouth. Through the centre of the stopper is bored a hole about $\frac{1}{8}$-in. in diameter. Massecuite from the pan is allowed to flow into the vessel until about seven-eighths full; the vessel is then allowed to cool until it has reached the temperature at which the factory measurements of massecuite are taken, and the weight of massecuite determined. Water is then carefully poured over the surface of the massecuite till the vessel is full, the stopper inserted, when the excess of water escapes through the aperture and is wiped off. The method of calculation is shown below:—

FIG. 330

	Grms.
Weight of vessel and stopper empty	416·35
,, ,, ,, ,, and water	2163·40
,, water	1747·05
,, vessel, stopper, and massecuite	2645·95
,, massecuite	2229·60
,, vessel, stopper, massecuite, and water	2875·95
,, water above massecuite	230·00
,, water in space occupied by massecuite	1517·05

Apparent specific gravity of massecuite .. $\frac{2229\cdot60}{1517\cdot05} = 1\cdot469$

In using this method no attempt is made to remove imprisoned air-bubbles, the object of the determination being to facsimilize the actual working of the factory.

An accurate determination of actual specific gravity of a massecuite can be made by this method, using instead of water an indifferent material such as oil. This is introduced into a wide-mouthed vessel similar to the one already described; an oil of already determined density is poured over it, and the two mixed until air-bubbles are no longer seen to rise. The stirrer may conveniently be a piece of iron rod, of such a length that it may remain in the vessel without interfering with the insertion of the stopper. After removal of the air-bubbles, the vessel is filled up with oil and the determination completed, as above. An example follows:—

	Grms.
Weight of vessel, stopper and stirrer	453·75
,, ,, ,, ,, ,, and oil	1838·35
Specific gravity of oil (water = 1·0)	0·8550
Weight of oil	1384·95
,, vessel, stopper, stirrer and massecuite	2548·35
,, massecuite	2095·65
,, vessel, etc., massecuite and oil	2743·20
,, oil in space occupied by massecuite	1190·10

Real specific gravity of massecuite .. $\frac{2095 \cdot 65}{1190 \cdot 10} \times 0 \cdot 855 = 1 \cdot 5056$

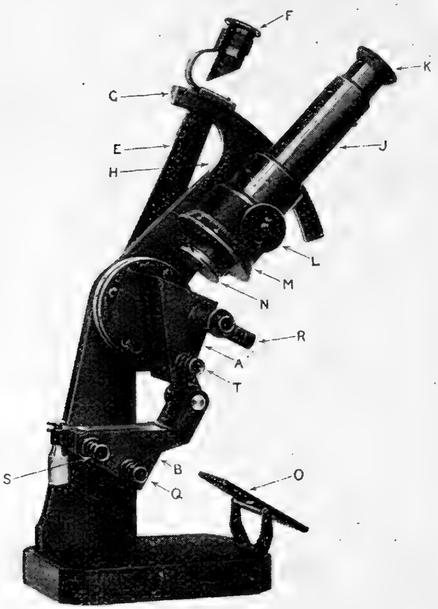

FIG. 331

Determination of the Refractive Index.—The instrument most convenient for this purpose is the Abbe refractometer, *Fig.* 331, with heatable prisms as made by Adam Hilger, Ltd. The determination of the refractive index is made as follows:—The instrument is brought into a horizontal position, and the two prisms *A* and *B* separated by opening the milled head clamp attached to the lower prism; a drop of the material under analysis is placed on one of the prisms, which are then closed and secured by the clamp so as to obtain a film of material; the mirror *O* is then adjusted so as to throw a beam of light through the prisms; looking through the observation telescope at *K* and moving the alidade *E* on the left of the instrument, a dark shadow is seen to move over the field. The reference point is the coincidence of the edge of the shadow with the intersection of the cross lines in the field of vision; the reading on the quadrant scale *C* gives directly the refractive index of the material under examination, whence can be obtained the percentage of dry matter by reference to the tables, given in the Appendix. Instruments are now obtainable provided with a sugar scale.

To maintain a constant temperature, a stream of water should be allowed to pass through the coil arranged in the instrument.

The milled head *L* on the left of the base of the observation telescope serves to correct for colour; when not adjusted, instead of a uniform dark shadow a coloured shadow appears, the dark shadow being obtained by rotation of the milled head.

Determination of Water.—The direct determination of water is made by the expulsion of the water as vapour at a temperature equal to, or above, the boiling point at the pressure at which the determination is made. Insurance that all the water has been expelled is obtained by the identity of consecutive weighings, the last weighing being made after a further heating. The accuracy of the determination depends on water being the only material expelled, and is vitiated by the presence of other volatile bodies such as acetic acid and even carbon dioxide, which is often found dissolved to a considerable extent in molasses.

A second source of error obtains in the decomposition of reducing sugars, particularly fructose, at high temperatures.* To prevent, or at least reduce, this source of error, the drying may be done under less than atmospheric pressure in vacuum ovens, at a temperature of 70° C. The use of a vacuum oven is also permissible to accelerate the drying with materials which do not suffer decomposition at 100° C. Sugar materials towards the end of a drying process become extremely viscous and part with the last traces of water with difficulty. To decrease the time required, a large surface of exposure is obtained by the use of absorbent agents, over which the sugar material is distributed in the shape of a solution. The absorbents used are pumice stone, and quartz sand, as suggested by Wiley and Broadbent,[4] and filter paper crimped into a wad, as used by Josse.[5] These materials are dried before the addition of the sugar material and are treated as a part of the container.

Acceleration of the period of drying may also be obtained by drawing a current of hot dry air over, or through, the material. In general, the containers used in water determinations are shallow aluminium dishes, listed by dealers as specially applicable to milk analysis.

A formal routine for the determination of water in cane sugar-house products is described below. This routine may be modified by the individual chemist in accordance with the principles discussed above.

Sugars of Higher Grade.—Weigh out about 5 grams into a dry container. Keep at 100° C. for 10 hours. Weigh. Replace for one hour. Re-weigh

---

* The extent of this loss was examined by the writer. A waste molasses was exposed for 10 hours to a temperature of 100° C. A current of dry air, free from carbon dioxide, was drawn over the molasses. The volatile matter given off was passed through calcium chloride to collect the water and through potash to collect the carbon dioxide and volatile acids. Per 100 total loss of weight 98.7 was found as water, 1.0 as volatile acids and carbon dioxide and 0.3 was apparently lost. With a juice 99.7 was found as water and 0.3 as carbon dioxide and volatile acid.

and repeat until consecutive weights do not vary. Vacuum drying is admissible, but unnecessary. Where results of less exactitude are required for immediate use, the drying may be carried out at 110° C.

Sugars of Lower Grade.—As for higher grade sugars, with the obligatory use of vacuum drying at low temperatures.

Massecuite, Molasses, Juices.—In a flat shallow container, place about 10 grams of some absorbent material, such as pumice stone, quartz sand, or filter-paper, then obtain the weight of the container, absorbent material, and stirrer. Weigh into the container the massecuite, molasses or juice. With the first two materials, add sufficient distilled water to dissolve and to distribute over the absorbent material. Dry at a low temperature to constant weight.

The necessity for the use of a low temperature is most pronounced with molasses where the proportion of reducing sugars is greatest. Results of reasonable exactitude may be obtained with juices at atmospheric pressure.

Alternatively, the following scheme may be adopted:—Fold and crimp a strip of filter paper. Insert this in a stoppered tube, through the stopper of which are led two tubes. Dry and weigh the tube and its contents. Weigh and dissolve, if necessary, the material to be dried. Distribute it over the crimped paper. Insert the tube in a bath of boiling water and draw through the tube a current of dry air, until constant weight is obtained.

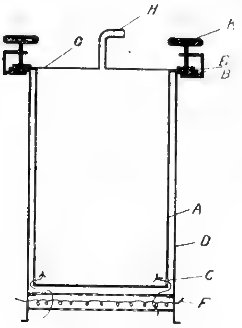

FIG. 332

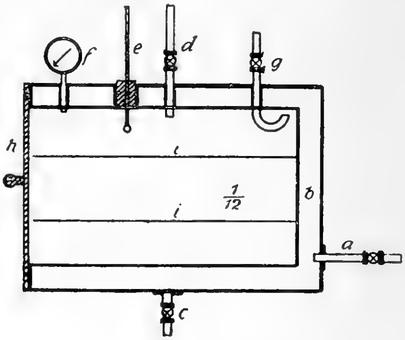

FIG. 333

Bagasse.—As shown by Norris[6], bagasse may be dried at a temperature of 130° C. with so small a decomposition as not to affect the value of the results. At this temperature desiccation is complete within two hours, as compared with at least six hours at 100° C. Two very different routines obtain. The method followed in Java and Hawaii entails the use of flat containers in which the bagasse is placed in a shallow layer. These containers, which are from one half to one inch high, and about 20 square inches in area, hold from 20 grams to 50 grams of material. In order to obtain a representative sample in so small a quantity, the original sample must be brought to a fine state of division in a chopping machine. A change in composition during the process of subdividing is inevitable.

The other routine is that recommended by Spencer[7], and with him the writer is in complete agreement. In this method much larger quantities of material are used, and the analysis is made on the bagasse without any subdivision. The apparatus designed by the writer for the purpose, and which differs only in details from that employed by Spencer, to whom the routine is due, is shown in *Fig.* 332. A is a cylindrical container 6 ins. diameter by 10 ins. high, provided with a wide flange B at the top and perforated at the side near the bottom as indicated at C. D is a cylindrical vessel with a flange E corresponding to the flange B. At the bottom of this container is located a hot element, F, which may be either a steam coil, or an electrically heated resistance. The bottom of the vessel D is perforated. Across the top of the bagasse container is laid a cover G, in which is inserted a tube H, allowing of connection to a source of vacuum. The three parts B, E, and G may be drawn together by means of clamps K, and a tight joint secured. On making connection to the source of vacuum, a current of hot air following the direction shown by the arrows is aspirated through the bagasse. The size of container given will hold 1,000 grams of bagasse and drying will be complete in two hours.

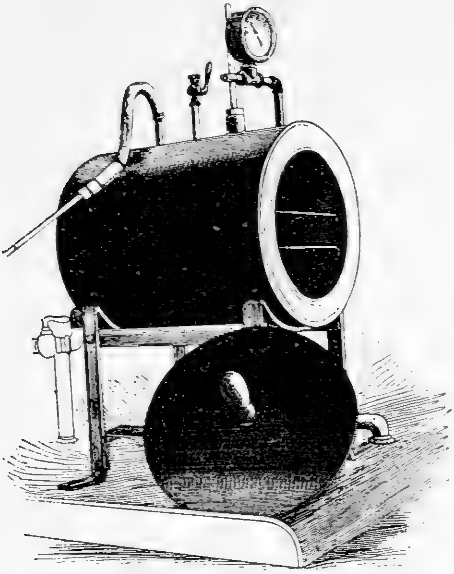

FIG. 334

Vacuum Oven.—The vacuum ovens usually found in sugar laboratories are essentially of the pattern devised by Carr[8]. They are obtainable from dealers, but more conveniently and at less cost can be constructed in the field. One made by the writer is shown in section in *Fig.* 333, while a perspective view is given in *Fig.* 334. It consists of a piece of 6-inch copper pipe 9 inches long. A chamber *b* is arranged round the pipe, into which is conducted exhaust steam, the condensed water being carried away by the pipe *c*. The vacuum chamber of the oven is connected to the last cell of the evaporator by a half-inch pipe *d*. The door of the oven is a stiff iron or steel plate *h*, on which is arranged a washer of some soft material such as asbestos packing. The external pressure keeps the door in place and thumb-screws are unnecessary. A pipe *g* serves to break the vacuum. A vacuum gauge and thermometer are shown at *f* and *e*.

The arrangements specifically mentioned here may be modified by filling the space between the oven and jacket with water and heating by a flame, instead of using exhaust steam; and a water vacuum pump may be used in place of a connection to the evaporator.

Determination of Cane Sugar.—The method adopted generally for determining the quantity of sugar present in a material is based on the measurement of the rotation of a ray of polarized light. Within the limits specified in detail below, this rotation is proportional to the concentration of the solution through which the ray passes, and to the length of the column of the solution. Hence, if the rotation for any one concentration and for any one length of column be known, an unknown concentration can be estimated when the rotation for that concentration and for a known length of column is determined.

Specific Rotation.—The specific rotation is that rotation expressed in angular degrees when the light passes through a column of length 10 cms. of solution containing one gram in one cubic centimetre. This rotation is referred to some source of monochromatic light, the yellow line of the sodium spectrum or the green line of that of mercury being selected for use. Observations made on these bases are referred to as $[\alpha]^t_D$ and $[\alpha]^t_{Hg}$. Rotations measured with ordinary white light are referred to as $[\alpha]_j$ (French *jaune* yellow, referring to the elimination of the yellow rays. *V.* page 477).

For convenience of reference, the specific rotations of some important sugars are collected here, where p is the percentage, and c the concentration in grams per 100 c.c. The rotations are referred to $[\alpha]^{20}_D$

Sucrose[9] = $66{\cdot}386 + 0{\cdot}015035\, p - 0{\cdot}0003986\, p^2$.
Sucrose[10] = $66{\cdot}438 + 0{\cdot}010312\, p - 0{\cdot}003545\, p^2$.
Sucrose[11] = $66{\cdot}529$ (for $c = 26$).
Glucose[12] = $52{\cdot}50 + 0{\cdot}018796\, p + 0{\cdot}00051683\, p^2$.
Fructose[13] = $-[101{\cdot}38 - 0{\cdot}56\, t + 0{\cdot}108\, (c - 10)]$.
Raffinose $5H_2O$ [14] = $104{\cdot}5$ [for $c = 16{\cdot}6$].
Maltose[15] = $140{\cdot}375 - 0{\cdot}01837\, p - 0{\cdot}095\, t$.
Lactose[16] = $52{\cdot}5$ for $t = 20°$ C.
Mannose[17] = $12{\cdot}96$ for $t = 20°$ C.
Galactose[18] = $83{\cdot}883 + 0{\cdot}0785\, p - 0{\cdot}209\, t$.
for values p 5 to 35 and t 10° C. to 30° C.
Arabinose[19] = $105{\cdot}4$ for $t = 18°$ C.
Xylose[20] = $18{\cdot}095 + 0{\cdot}06986\, p$ for p 3 to 34.
Dextran[21] = 230.
Levulan[22] = -221 for $t = 20°$ C.
Xylan[23] = 70 to 85.

Normal Weight.—In the process of saccharimetry a certain weight of cane sugar observed in the polarimeter under fixed conditions gives on the arbitrary scale a reading of 100 degrees. This weight is called the normal weight. The original normal weight was devised by Biot,[24] who took as a standard of rotation that afforded by a plate of quartz 1 mm. thick and cut perpendicular to the optic axis. Transformed into sugar terms he found that this rotation was that produced by 16·47 grams of sugar dissolved in 100 c.c. and observed in a tube 20 cms. long. In combination with Clerget he reduced this figure to 16·35 grams, a figure for which the older Soleil-Duboscq instruments are graduated. Girard and Lunes[25] found 16·19 grams, a figure altered to 16·29 grams in the determinations of Mascart and Benard,[26] which now is the accepted standard. This weight has always been referred to 100 metric centimetres.

The German normal weight is due to Ventzke.[27] In his original publication he compared the polarization of various sugars in 25 per cent. solution, the specific gravity of cane sugar at this point being 1·1056, and defined this as a normal solution. He also used a tube 23·4 cms. long. Later this standard was changed to a sugar solution of density 1·1, with a tube length of 20 cms. This again was referred to weight, the equivalent being 26·048 grams of sugar dissolved in 100 c.c. Originally metric c.c. were specified, but in 1855 with the general adoption of Mohr's c.c. a change to this standard was made with no change in the weight. The International Sugar Commission sitting at Paris in 1900 recommended a change to metric c.c. and the adoption of 20° C. as the temperature of observation. The normal weight now became 26·0082 grams, for which 26 grams is substituted. A third normal weight, namely 10 grams, is that used by Wild in the few instruments of this type that have come into use.

In 1896, Sidersky, at the International Congress of Applied Chemistry, proposed the adoption of 20 grams as a normal weight, and at the International Congress of 1906, this quantity was specifically adopted as the International normal weight referred to metric c.c. and a temperature of 20° C.*

Unfortunately, however, the exact rotation of cane sugar is uncertain. By definition 26 grams of sugar in 100 metric c.c. observed at 20° C. in a 20 c.m. tube should read 100° on the Ventzke scale. Bates and Jackson[28] were the first to challenge this basic standard, and in a research of very great care, conducted at the U.S. Bureau of Standards, they found a value of 99·895. A very little later Walker[29] in Hawaii confirmed their work, finding a value of 99·86. The result first quoted makes the normal weight 26·027 grams. This value is very appreciably lower than that due to Schönrock on whose measurements of the equivalence of quartz and cane sugar the graduation of all except the French instruments is based. On the other hand, Herzfeld[30] has challenged the correctness of the work of Bates and Jackson, so a state of confusion prevails.

To remove an element of uncertainty the careful analyst should confirm the graduations of his instrument, and determine at the average temperature of his laboratory what is his proper normal weight. This is the procedure followed by Harrison[31] in British Guiana:—" Each 100 c.c. flask in use for sugar polarization is verified by weighing into it 99·533 grams of recently boiled distilled water at 20° C. The exact weight of chemically pure sugar, which, when made up to a bulk of 100 c.c. in one of the corrected flasks at 28° C., gives a polarization reading of 100°, is ascertained by experiment for each instrument, and this weight of sugar is invariably used instead of the maker's weight for 17·5° C."

It is at once evident that cane sugar can be determined by direct polarization only in the absence of other bodies which also rotate the plane of polarization. In very many routine analyses in the sugar-house the disturbing effect of other optically active bodies is small, and the polarization very closely measures the quantity of cane sugar present. For the purposes of trade and for the imposition of customs duties the polarization of raw sugars is accepted as the percentage of sucrose, from which, however, the polarization is to be carefully distinguished. In the presence of other optically active bodies the sucrose may be determined by the Clerget or double polarization methods, described in detail elsewhere.

---

* The 26-gram weight has also come to be referred to as the International normal weight.

The polarization, and also determination, of sucrose is affected by the conditions discussed below :—

Concentration.—The rotation of cane sugar varies slightly with concentration; Nasini and Villavecchia[10] found for p 3 to 65.

$[\alpha]_D^{20} = 66\cdot438 + 0\cdot010312\,p - 0\cdot00035449\,p^2$, where p is the percentage of sugar.

In very dilute solutions the results of different investigators are very discordant. Tollens[32] found very irregular values. Pribram[33] found a decrease from p 3·659 to 0·222 and Nasini and Villavecchia[10] found an increase from p 1·253 to 0·824.

Schmidt's[34] tables, which still remain in use, are based on the formula :— $[\alpha]_D^2 = 66\cdot514 - 0\cdot008415\,c$, where c is the grams of sugar per 100 c.c., and should be abandoned. The most probable formula is that of Landholt[35] which combines the results of Tollens, Nasini and Villavecchia into the formula :

$$[\alpha]_D^{20} = 66\cdot438 + 0\cdot00870\,\text{c.} - 0\cdot000235\,\text{c.}^2, \text{ for } c, \ 0 \text{ to } 65.$$

Temperature.—The effect of temperature on polarimetric observation is twofold :—firstly, there is the effect of temperature on the quartz wedge compensating system, and secondly the effect on the specific rotation of the sucrose. As regards the first, three factors enter :—the linear expansion of quartz parallel to and perpendicular to the optic axis, the *increase* in the specific rotation of quartz with rise of temperature and the expansion of the scale, which becomes zero when the latter is engraved on the wedges. These effects have been studied by Schönrock[36] and, as the result of his studies, it is found :—

Rotation of quartz near 20° C.

$$[\alpha]_D^t = [\alpha]_D^{20} + [\alpha]_D^{20}\,0\cdot000143\ (t - 20).$$

Linear coefficient of expansion of quartz parallel to the optic axis, 0·000007

Whence specific rotation coefficient, $0\cdot000143 - 0\cdot000007 = 0\cdot00000136$

Linear coefficient of expansion of quartz perpendicular to the optic axis, 0·000013.

Linear coefficient of expansion of nickelin scale, 0·000018.

Linear ,, ,, ,, ,, glass ,, 0·000008.

Whence the total temperature coefficients for the instrument alone become :—

Nickelin scale $0\cdot000136 + 0\cdot000007 - 0\cdot000013 + 0\cdot000018 = 0\cdot000148$
Glass scale $0\cdot000136 + 0\cdot000007 - 0\cdot000013 + 0\cdot000008 = 0\cdot000138$
Scale on wedge $0\cdot000136 + 0\cdot000007 - 0\cdot000013 = 0\cdot000130$

and the following formulæ result :—

Nickelin scale $S_{20} = S_t + S_t\ 0\cdot000148\ (t-20)$
Glass scale $S_{20} = S_t + S_t\ 0\cdot000138\ (t-20)$

Scale engraved on wedge $S_{20} = S_t + S_t\ 0\cdot000130\ (t-20)$, where S_t is the reading at t° C. and S_{20} is that at 20° C.

The effect of temperature on the specific rotation of cane sugar was first observed by Dubrunfaut[38] and, though disputed by various physicists, a decrease with rise of temperature is now established. Schrönrock[36] has found that the coefficient varies with temperature and is as follows :—

10° C., 0·000242 ; 20° C., 0·000184 ; 30° C., 0·000121.

These sources of error are usually summed up in one formula which may be used as a general one independent of the type of instrument or scale :—

$$S_{20} = S_t + S_t \; 0 \cdot 0003 \; (t - 20).$$

This expression is based on the average results of Andrews[37], the U.S. Coast and Geodetic Survey[38], Wiley[39], Geerligs[40], and Watts and Tempany[11].

The correction quoted immediately above is a *blanket* correction, and includes the error introduced by expansion of the tube, assumed to be glass and of correct length at 20° C.

The above section assumes that the solutions are observed at the temperature at which they were made up. If observed at one and made up at a second temperature the expansion of the sugar solution influences the result, and a correction based on the expansion of the sugar solution, applicable to solutions made up at 20° C. and observed at t° C., must be applied.

The blanket correction found by Andrews and others agrees exactly with the sum of the individual corrections found by Schönrock, referred to 25° C. and a nickelin scale. At this temperature the coefficient for sugar is 0·000152, which added to 0·000148 gives exactly 0·0003 as the blanket correction. Since, however, the temperature coefficient of sucrose is a function of the temperature, a blanket correction can only be correct at one particular temperature.

The validity of temperature corrections as applied to impure sugars has been ably discussed by Browne.[42] The correction given above is only strictly valid for pure sucrose. Commercial sugars contain fructose, and for this body a reverse correction is necessary. Browne has shown that the correction given in this section is applicable generally to raw sugars of 96 test. For sugars containing much reducing sugar it actually accentuates the error, and for sugars of about 80 test he has shown that generally the polarization is independent of temperature, while below this test the correction is negative. Nevertheless, by a decision of the U.S. Supreme Court a temperature correction is applied to all products at the U.S. Customs. This difficulty may be entirely eliminated by making all observations at 20° C. as is done in the New York Sugar Trade Laboratory.

The chemist in the tropics has to work at a temperature remote from 20° C. Since all his readings are equally affected, his control and balance sheet are not invalidated. The polarizations of the sugars at northern ports should however be systematically higher than those determined on the plantation, and exact coincidence should be considered as evidence of a deterioration of the sugar in storage and transit.

Presence of Inactive Bodies.—The most detailed study is due to Farnsteiner[43] who found a small decrease in the specific rotation of cane sugar in the presence of :—

Hydrates of the alkalies and alkaline earths.

Chlorides, nitrates, sulphates, carbonates, phosphates, acetates and citrates of the alkalies.

Chlorides of the alkaline earths.

Borax, magnesium sulphate.

An increase occurs with formaldehyde.

The effect is in all cases small, and in the quantities in which these bodies occur in routine analysis may be neglected.

The action of lead acetate is discussed separately.

The Errors Inherent to the Use of Lead Salts as Clarificants.—The use of lead salts in sugar analysis introduces two small, but distinct, sources of error. These are recognized by analysts, but in general, in technical work, are neglected. These inherent errors are discussed below:—

In the majority of the schemes for clarification detailed below, an insoluble precipitate is formed, which occupies an appreciable volume, so that if, after clarification, the solution be made up to 100 c.c. the actual volume is 100 c.c. less the volume occupied by the precipitate; *prima facie*, an error is thus introduced, though that this is the case is denied by certain chemists. H. Pellet[44] in particular claims that the precipitate formed by the addition of basic acetate of lead entrains sugar, and that this entrainment compensates for the volume occupied by the lead precipitate. In his experiments he shows that a weight of sugar material dissolved in water and made up to 100 c.c. in the presence of its precipitate gives a reading of, say, 50; the same weight of sugar material made up to 200 c.c. in the presence of its precipitate will give a reading exactly half the first, in this case, 25; if the lead precipitate exercised an influence proportional to its volume, the first solution would be more than twice as concentrated as the second, and hence the first reading should be more than twice as large as the second. This phenomenon he attributes to the entrainment of sugar by the lead precipitate, and claims that it is unnecessary to apply a correction for its volume.

The writer in investigating the same subject found also that a fixed weight of sugar material made up of different volumes in the presence of the precipitate tends to give identical polarizations independent of the dilution, and explains the apparent non-influence of the lead precipitate by an *increase* in the specific rotation of cane products with dilution.

Horne's very detailed experiments also point to the conclusion that the lead precipitate introduces a positive error and that sugar is not entrained.

Correction for the volume of the lead precipitate is made by the following methods:—

1. *Scheibler's Method.*[45]—The material under analysis is first made up to a volume of 100 c.c. in the presence of its precipitate, and the reading taken; a second reading is taken under identical conditions, except that the volume is now made up to 200 c.c.

Let x be the volume of the precipitate; let a be the reading in 100 apparent c.c., and b the reading in 200 apparent c.c.

Then $(100 - x)\ a = (200 - x)\ b$.

Solving this equation x is found.

2. *Deerr's Method.*[46]—The material under analysis is first made up to 100 c.c. in the presence of its precipitate, filtered, and 50 c.c. of the filtrate diluted to 100 c.c., and the reading observed; let it be a. The same weight of material is made up to 200 c.c. in the presence of its precipitate, and the reading taken; let it be b; let the volume of the precipitate be x; then $2a\ (100 - x) = (200 - x)\ b$.

Solving this equation x is found.

The object of this procedure is to obtain both readings in the same concentration and at the same part of the scale, thus eliminating errors due to any change in opticity with dilution, errors in the zero point and errors in scale graduation.

3. *Method of Sachs.*[47]—The precipitate obtained is collected on a filter and washed until free from sugar; it is then transferred to a graduated flask,

into which is weighed a sugar of known polarization. This weight of sugar is then made up to an apparent definite volume in the presence of the precipitate and a polarimetric reading taken. The apparent increase in the polarization of the sugar affords data to calculate the volume of the precipitate.

4. *Wiechmann's Method.*[48]—The precipitate is collected, washed free of sugar, dried and weighed. Its specific gravity is then obtained with the pycnometer, benzene being the liquid used; from its weight and density the volume of the precipitate is calculated.

5. *Horne's Method.*[49]—Horne eliminates the error due to the volume of the lead precipitate by making the solution of sugar product up to definite volume, and clarifying by the addition of dry basic acetate of lead in powdered form, and assuming that the volume of the acetyl radical which goes into solution is compensated by the volume of the material precipitated. This method has met with considerable approval, and may be considered as a standard process.

All the above methods are applicable to the analysis of juices measured by volume and not by weight.

Action of Basic Lead Acetate on Sucrose.—The effect of lead acetate on cane sugar is small, and is given by Bates and Blake[50] as under, pure sugar being tested in normal concentration:—

Basic lead acetate added. cc.	Difference in Polarization. Ventzke.	Basic lead acetate added. cc.	Difference in Polarization. Ventzke.
0·5	— 0·09	4·0	— 0·06
1·0	— 0·13	5·0	— 0·93
1·5	— 0·10	6·0	— 0·00
2·0	— 0·13	7·0	0·05
2·5	— 0·06	8·0	0·09
3·0	— 0·08	10·00	0·19

Action of Basic Lead on Reducing Sugars.—The left-handed rotation of fructose is diminished by the presence of lead acetate in alkaline solution, so much so that in great excess the opticity may become positive. This observation was first made by Gill.[51] It has also been shown by Davis[52] that the position of equilibrium is not obtained instantaneously, and that a slow, progressive change in the polarization of products containing fructose takes place in the presence of basic lead acetate. Neither glucose nor fructose is precipitated by basic lead salts in pure solution, but, in the presence of bodies which form insoluble combinations with lead, both glucose and fructose are carried down, probably in the form of lead glucosate and fructosate. This observation was first made by Lagrange,[53] and has been further studied and proved by Geerligs,[54] Pellet,[55] Bryan[56] and Deerr,[57] since the absence of precipitate in the system, fructose-water-basic lead acetate, has led to much confusion and misunderstanding.

It is also to be remembered that this lead compound is not broken up by the addition of sodium sulphate or other precipitant of lead. Actually the precipitation of an excess of lead in this way leads to a further precipitation of reducing sugars and accentuates the error. The error is also introduced by the use of neutral lead acetate followed by sodium carbonate to remove an excess of lead.

It follows then that the polarization of a product containing reducing sugars depends on the quantity of basic lead acetate used in the clarification, and it is for this reason that formal instructions often specify: "Carefully avoiding an excess." Nevertheless, both the personal equation of individual operators and also the composition of the lead solution will affect the determination; one analyst will use just sufficient lead to obtain sufficient decolorization to enable a reading to be obtained, and a second will aim at obtaining the maximum decolorization. Lower readings will be obtained by the former, and results between different analysts are not strictly comparable. Elimination of this source of error is given under "Determination of Sucrose."

Preparation of Sugar Materials for Polarimetric Observation.—Except in special cases, all sugary materials require clarification and filtration before observation in the polariscope. The agents used are:—

Alumina Cream.—Used in *sufficient* quantity, alumina cream will entangle the colloids even in a material such as waste molasses. Its use is limited to the removal of turbidity from high grade materials. It is prepared by precipitating a cold saturated solution of an alum with ammonia and washing the aluminium hydroxide by decantation till it is free from sulphates.

Alternatively, the washing may be dispensed with and soluble sulphates left in solution. This preparation is used in combination with lead clarification, the sulphates precipitating any excess of lead and producing perhaps a more brilliant filtrate.

Kieselguhr.—The diatomaceous earth mined and used as kieselguhr has the property of entangling colloids and affording a clear filtrate when used in sufficient quantity with sugar products. It is used chiefly as an adjuvant with other materials.

Precipitation of Alumina within the Solution.—This method is due to the writer, and, as finally formulated, is as below:—

A saturated solution of baryta* is prepared. At 27·5 C. such a solution is nearly 0·5 normal. 165 grams of aluminium sulphate ($Al_2(SO_4)_3 18H_2O$), and 135 c.c. of normal sulphuric acid are dissolved in 1,000 c.c. This solution is adjusted until 15 c.c. are exactly equivalent to 25 c.c. of the baryta solution, using phenolphthalein as indicator. The sulphuric acid is employed so as to accelerate inversion when sucrose is determined, as opposed to polarization. As a clarificant it has no objective, but its presence avoids the use of two sulphate solutions.

The sugar material to be prepared for examination is dissolved in 50 c.c. of water; 25 c.c. of the baryta solution added and mixed with the sugar solution; 15 c.c. of the alum solution is then allowed to flow into the mixture with constant stirring. The whole is then completed to 100 c.c. and is then ready for filtration and examination. The volume occupied by the precipitate produced is approximately 0·70 c.c. These quantities are sufficient to clarify 3·25 grams, or one-eighth normal weight of a waste molasses and to give a filtrate readily capable of observation in a 40 cm. tube, provided a nitrogen-filled tungsten filament lamp is used. Juices and normal weights of sugars can be clarified with less of the re-agents, but it is convenient to use one fixed quantity and apply one fixed correction for the precipitate volume.

---

*The use of aluminium sulphate and baryta as a defecant in manufacture was suggested by Pimienta in "Manuel de Cultivo de Caña de Azucar." 1881.

A fuller decolorization in this process is obtained by the use of sodium hydrosulphite, added just before filtration. The advantage of the process is that nothing is introduced into solution, the products of the reaction, barium sulphate and aluminium hydroxide, being insoluble. It is not so convenient for use as basic lead acetate, which will continue as the standard defecant, but it may be used for special analyses.

Basic Lead Acetate.—This re-agent, the use of which is due to Clerget,[56] is prepared under a variety of directions :—(*a*) 130 grams litharge and 430 grams neutral acetate of lead are boiled with 1,000 c.c. water, and finally diluted to a density of 1·250. (*b*) 200 grams litharge, 600 grams neutral acetate of lead and 2,000 c.c. water, allowed to stand for 12 hours with occasional agitation.

Neutral Lead Acetate.—Neutral lead acetate may be used with materials of light colour, but is nearly useless with substances such as molasses. It may be kept as a solution of 54° Brix.

Dry Basic Acetate of Lead.—The use of this material is due to Horne.[49] It is used as the anhydrous dry salt and placed directly in the solution.

Calcium Hypochlorite.—The use of this material is due to Heron[59] and to Zamaron.[60] A solution of calcium hypochlorite made by agitating 625 grams with 1,000 c.c. of water is filtered and preserved for use in stoppered bottles. It should be of density 1·14 to 1·16. Pellet uses 20 c.c. of this solution in combination with neutral lead acetate to decolorize 4 grams of molasses.

Basic Lead Nitrate.—This process is due to Herles.[61] Two solutions are used :—(*a*) 90 grams caustic soda dissolved in 2,000 c.c. of water ; (*b*) 1,000 grams lead nitrate dissolved in 2,000 c.c. water. The lead solution is added to the alkali solution immediately before use, in the proportion of 1 of lead to 1·0 or 1·1 of alkali.

Mercuric Compounds.—Mercuric compounds exercise an effect similar to lead salts, but not in so marked a degree. They, however, precipitate amides from solution and are used for the separation of these bodies. The following formula is due to Andersen[62] :—220 grams mercuric oxide are dissolved in 100 c.c. of nitric acid of specific gravity 1·39. This is made up to 1,000 c.c. with the addition of 60 c.c. of a 5 per cent. solution of caustic soda. After addition to a sugar solution neutralization is necessary. It is stated that an excess has no effect on the opticity of sugars.

Animal Charcoal.—By the use of this body, all cane sugar products can be obtained as a brilliant and largely decolorized filtrate. Since sugar is absorbed, as was first shown by Clerget,[58] this material has only a limited and specialized use in analysis. Certain highly purified charcoals have been prepared in which the absorption is a minimum, but results obtained are not reliable, and the products offered by different dealers vary very considerably. To nullify the absorption, it has been proposed to saturate the charcoal with sugar before use, but with dilute solutions sugar might then be dissolved out from the charcoal.

In a second procedure, the sugar solution is filtered through a column of the charcoal and the runnings rejected until absorption no longer takes place.

A third process aims at obtaining a correction by observing the absorption from solutions of known polarization, and conducting the test under conditions exactly equal to those of the check.

Formal Instructions for obtaining the Polarization.—*Juices.*—(*a*) Fill a flask graduated at 100–110 c.c. to the 100 c.c. mark with juice. Add sufficient basic lead acetate to clarify and no more than necessary. Complete the volume to 110 c.c. Shake. Filter. Reject the first runnings. Obtain the polarimeter reading. Then the polarization is $\frac{N \times W \times 1{\cdot}1}{100 \times D}$ where N is the reading, D is the density of the juice referred to water at 17·5° C., and W is the normal weight adopted.

(*b*) Transfer 52·096 grams of juice to a 100 c.c. flask referred to Mohr's c.c. (or 52 grams if the flask is graduated in true c.c.). Add lead acetate as in (*a*), complete the volume with water to 100 c.c. Filter, etc., as in (*a*). The polarization is one-half the observed reading. Spencer's pipette,[63] graduated with reference to degrees Brix, so as to deliver the proper quantity corresponding to the density of the material, is used in this routine.

(*c*) Place an unmeasured quantity of juice in a container. Add sufficient dry lead acetate to clarify. Agitate violently. Filter, etc., as in (*a*). Then the polarization is $\frac{NW}{100\,D}$ where N is the reading, D is the density of the juice referred to water at 17·5° C., and W is the normal weight adopted. This method is due to Horne.[49]

Raw Sugar.—Weigh out the normal weight. Transfer to a 100 c.c. flask. Dissolve in water, making the total volume about 80 c.c. Add sufficient basic lead acetate to clarify, but not an excess. Complete the volume to 100 c.c. Shake. Filter. Reject the first runnings. Obtain the polarimeter reading of the filtrate, giving the polarization of the sugar.

The formal directions given above are substantially those adopted by the U.S. Bureau of Standards,[64] and for commercial and revenue purposes should be strictly followed. It is not permissible, for example, to take 24·32 grams and calculate the polarization. Such a variation is permissible, however, to the analyst working as an individual, but legally the exact instructions should be followed.

In addition to the above formal instructions, the use of filtered light is obligatory. For legal purposes, the observation must be made at 20° C., or corrected for temperature error, as indicated in the previous chapter.

The U.S. Bureau of Standards does not take into account the effect of the volume of the precipitate, or the effect of basic lead salts on the rotation of the fructose, which may be present. In a strict determination of sucrose in a sugar, as opposed to a polarization, these points should be considered.

The routine control operations also neglect these points and also any temperature correction.

Massecuites, Molasses, etc.—The routine is essentially as for Raw Sugar. In actual work the following procedure is adopted by most analysts. In obtaining the Brix the material is diluted 1 : 1. Normal weight of this diluted material is transferred to a 100 c.c. flask by means of a Spencer pipette and clarified as for a juice. Twice the reading gives the polarization. With very dark molasses it is better to use a half-normal weight of the 1 : 1 dilution.

Alternatively, the material may be weighed out, an integral fraction of the normal weight being used, or not, at the option of the operator.

Thirdly, a solution of any ascertained degree Brix may be made up without weighing. This solution may be treated as a juice and the purity determined, whence the polarization is calculated from the Brix determination. The results obtained by these different routines will vary following the principles discussed at the beginning of this chapter. For strict control work, the determinations should be made in the appropriate concentrations of non-sugar.

Filter Press Cake.—As under Raw Sugar, but using only 25 grams to compensate for the volume occupied by the insoluble matter.

Determination of Sugar in Bagasse.—The process always used is one of aqueous digestion and extraction of the sugar in a determined volume of water. A number of routines have been suggested and some of these are described below.*

Java Experiment Station Method.—Twenty grams of finely divided material are heated with 250 c.c. water and allowed to boil for fifteen minutes, the water evaporated being continually replaced by a drip from some convenient vessel. After heating, cooling, and the addition of basic lead acetate, the quantity of water remaining is determined by weight, to which is added that introduced with the material. The polarization of the filtered extract gives the polarization of the bagasse by calculation, or from a table.

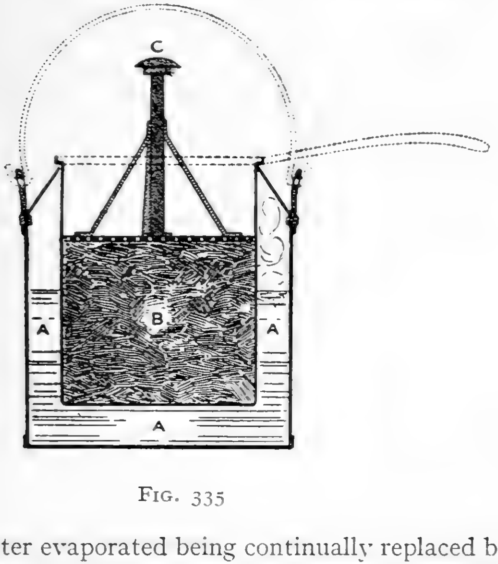

FIG. 335

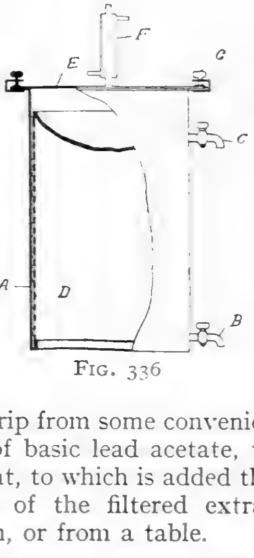

FIG. 336

Norris's Method.[66]—This method employs the "double cooker," shown in *Fig.* 335, which is of dimensions :—

A. 6 ins. high by 5¼ ins. diameter.
B. 4½ ins. high by 4¼ ins. diameter.

One hundred grams finely divided material are placed in vessel *B*, with 500 c.c. hot water and 5 c.c. of 5 per cent. solution of sodium carbonate. Water is placed in the vessel *A* and boiled for one hour. Every fifteen minutes the material in *B* is pressed down by the tamp *C*. After cooling, the weight of the extract is determined, the extract is pressed out, filtered

---

* The exactness of the usual bagasse analysis schemes has been subject to controversy. Pellet[65] found that ordinary boiling failed to extract all the sugar. Geerligs[66] found that prolonged boiling gave higher results, which he attributed to the gradual solution of hemi-celluloses. Norris[66] did not confirm this, but found that the fineness of division very materially affects the rate of extraction.

through cheese-cloth, 99 c.c. placed in a 100 c.c. flask, adjusted to the mark with lead acetate, filtered and polarized, and the polarization of the bagasse obtained by calculation, or from a table.

Zamaron's Method.[67]—100 grams of finely divided bagasse are put along with 200 c.c. of water in a wire basket placed in a copper container provided with a draw-off cock. The bagasse and water are boiled for 10 minutes and the extract drawn off into a litre flask. This process is repeated seven times, when rather less than 1,000 c.c. will have been obtained. Extraction is now assumed complete. Lead acetate is added, the volume completed to 1,000 c.c. and the polariscope reading obtained.

Deerr's Method.[68]—This method employs a larger quantity of material, so as to eliminate the necessity for chopping and sub-sampling with its accompanying errors and consumption of time. The apparatus, *Fig.* 336, consists of a vessel *A* of height twelve inches and of diameter six inches. A draw-off cock, *B*, is fitted at the bottom and a second, *C*, at a height of 8½ inches. The vessel is filled with boiling water above the height of the cock *C*, and the surplus removed by opening this cock. A fixed quantity of water is thus obtained. The bagasse is contained in the basket *D*, of dimensions 5¾ inches by 10¾ inches. This size of basket will hold 500 grams of loosely packed bagasse. This quantity is weighed out into the basket and the latter is then placed in the container. This container is provided with a wide machined, or ground, flange, on which sits the flat cover *E*, carrying the metal reflux condenser *F*. Clamps or spring clips, *G*, make a tight joint. The whole apparatus is then placed on a six-inch electric hot plate or over a naked flame, and the contents allowed to boil for 45 minutes, at the end of which time extraction is complete. A portion of the extract is drawn off, cooled, defecated with dry lead acetate and polarized. The quantity of water contained in the vessel, plus that introduced with the bagasse, can be correlated with the weight of bagasse constantly used, so that a half-normal extract is obtained.* The reading in the 40 cm. tube then gives the polarization of the bagasse. In this scheme only one weighing is required, namely, that of the basket and its contents against one fixed weight, and no calculation or reference to tables is required. Bagasse from the last mill of a train is sufficiently comminuted to allow of complete extraction. This routine is accurate and requires less time and attention than any other yet proposed.

Determination of Sugar in Cane.—As explained in the chapter on "Control," this quantity is almost always obtained from combining certain of the routine control observations. When a direct observation is required on individual stalks, the following methods may be adopted :—

1. Crush the stalks, halved or quartered longitudinally, in a hand mill. Weigh the resulting bagasse and take the weight of juice as the difference between weight of cane and bagasse. Determine the sugar in juice and in bagasse and calculate back to cane. Very rough results may be obtained from the analysis of the juice alone, as indicated in Chapter XXVII.

2. Thoroughly comminute the cane and extract the sugar by aqueous digestion, following one or other method indicated under "Determination

---

* This is best done by fixing the weight of bagasse after ascertaining how much water is contained in the apparatus. There is, of course, no reason why exactly 520.96 grams bagasse should be used, as long as a half normal solution is obtained. There will be a different weight of bagasse for each apparatus, dependent on how much water is held in the container.

of Sugar in Bagasse." The means usually found to comminute the cane are :—

(*a*) The "Chipped beef" slicer, *Fig.* 337, obtainable from dealers and giving, with considerable labour, very thin transverse slices. A pattern-maker's trimmer may also be used with advantage.

(*b*) The "Sausage meat chopper," *Fig.* 338, consisting of a heavy, vertically reciprocating knife with chopping table simultaneously rotating about a vertical axis in a horizontal plane. This machine produces finely divided material at the expense of excessive manual labour and much noise.

(*c*) The "Hyatt cane reducer," *Fig.* 339. This consists of a horizontal, rapidly rotating drum, on the periphery of which are arranged a series of staggered teeth, or "drunken saws." This machine rapidly reduces cane, in quantity, without loss of juice, to a finely shredded condition, from which the juice is readily extracted. It is by far the most valuable appliance for this specific purpose.

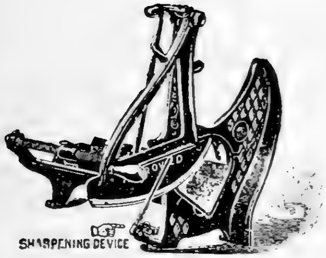

FIG. 337

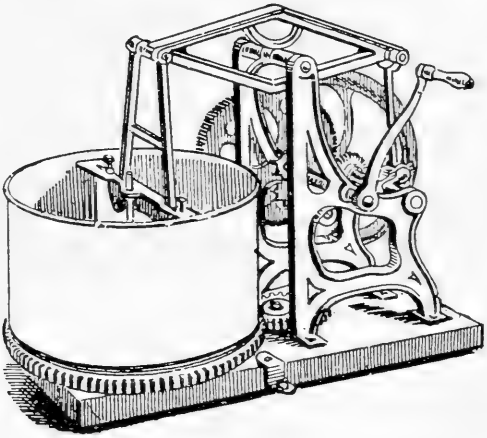

FIG. 338

Determination of Crystallized and Dissolved Sugar.—The total sugar in a massecuite or molasses exists in two forms : either separated out as crystals, or still remaining in solution in the necessarily accompanying water. In general, two similar juices, similarly treated and boiled to the same water content, will separate out the same amount of crystals, but the actual recovery at the centrifugals may be widely different. For, in one case, by skilful pan-boiling, the crystallized sugar is obtained in a form permitting of easy separation from the molasses, and, in a second, the presence of fine crystals may cause considerable losses. The determination of the crystallized sugar affords a valuable check on the pan-boiler.

Vivien's Method.[69]—Weigh out about 200 grms. of massecuite and place in the funnel of the pressure filtering apparatus, as in *Fig.* 340, connect the apparatus to a filter pump, and wash with a cold saturated solution of pure sugar and water until all molasses are removed ; transfer the crystals to a tared dish and obtain their weight. Remove about 10 grms. and dry to constant weight to determine the water adhering to the crystals. At a temperature of 84° F., for each one part of water 2·125 parts of sugar are dissolved in a saturated solution. This last determination gives data to calculate the weight of washing syrup which has replaced the molasses. An example is appended.

Weight of massecuite, 200 grms.; weight of washed crystals, 175 grms.; percentage of water in washed crystals, 7·54. Then total moisture in washed crystals, $\frac{175 \times 6{\cdot}54}{100} = 12{\cdot}62$, and wash liquor in washed crystals $=$ $12{\cdot}62 \times 3{\cdot}125$ *t*— 35·77 grms., and weight of crystals 175 — 35·77 = 139·23 grms., or 69·66 per cent. on weight of massecuite.

Dupont's Method.[70]—Heat the massecuite to a temperature of 80° C. and centrifuge in a small hand machine, the wire basket of which is covered with thin flannel, or some similar material; polarize the molasses and the cured sugar and calculate the percentage of crystallized sugar from the following formula: $x = \frac{a - p'}{p' - p'}$, where x = weight of crystallized sugar in one part of massecuite, a the percentage of sugar in the massecuite, p the percentage of sugar in the cured crystals, and p' that in the molasses.

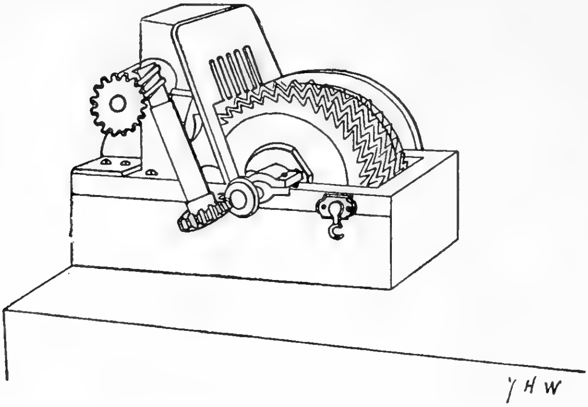

FIG. 339

FIG. 340

This formula is applicable for use on the factory scale, provided no water is used in curing, and that the molasses are filtered through flannel before analysis, so as to remove fine crystals; if water be used in small quantities, and if the amount can be calculated, the sugar percentage of the molasses can be corrected for dilution, but, in this case, the formula will not give results so correct.

Geerligs' Method.[71]—This method depends on the observation that sugar crystals themselves only contain a trace of ash, the ash of commercial sugars being due to the accompanying molasses; hence, in a massecuite, the ash is due solely to the molasses. Determine the percentage of ash in the massecuite and in its molasses freed from fine grain by filtration through glass wool; as an example, let the massecuite contain 2·25 per cent. and the molasses 6·07 per cent. ash; then the percentage of molasses in the massecuite is $\frac{2{\cdot}25}{6{\cdot}07} \times 100 = 37{\cdot}07$ per cent.; the remainder 63·93 per cent. being crystallized sugar.

Deerr's Method.—On the plate of a Buchner funnel is placed a layer of glass wool, after which the funnel is filled with the massecuite under analysis. On connecting to the vacuum, the molasses, entirely freed from crystals, passes through.

Let x and y be the proportions of sugar in the massecuite and filtered molasses, respectively, and let s be the proportion of sugar as crystals per unit of massecuite.

Then $x = (1 - s)\, y + s$, whence $s = \dfrac{x - y}{1 - y}$.

This equation gives the amount of crystals of *pure* sugar; actually, in practice, the crystals are obtained with an adhering layer of molasses, which increases the weight, as indicated by this analysis.

These methods have been described as applicable to massecuites; they are, of course, applicable to molasses to determine the quantity of fine grain which has been separated on cooling, or is present after having passed through the mesh of the centrifugal basket.

Detection and Estimation of Small Quantities of Sugar.—The reaction of Molisch[72] is the one most often used. It is thus carried out:—Five c.c. of concentrated sulphuric acid are placed in a test tube, into which is then run 2 c.c. of the water supposed to contain sugar, followed by the addition of two or three drops of a 5 per cent. alcoholic solution of α-naphthol; the contents of the test tube are shaken, and the colour produced compared with that obtained with known quantities of sugar; as little as one part of sugar in 1,000,000 can be detected. If the sulphuric acid alone produces the reaction it should be boiled to destroy organic matter before use.

Ammonium molybdate is also a useful re-agent to employ, and, as shown by Pinoff,[73] is specific for fructose in the absence of mineral acids. As applied by Pinoff to fructose 0·1 gram of material, 10 c.c. of a 4 per cent. solution ammonium molybdate, 10 c.c. water and 0·2 c.c. glacial acetic acid are heated at 95° C.; fructose in three minutes gives a fine blue coloration; all sugars give the same reaction in the presence of mineral acids. The writer modifies this test as follows:—To a suspected water 2 per cent. of hydrochloric acid of 1·18 sp. gr. is added, placed in a test tube, and heated on the water bath for five minutes; an equal quantity of a 5 per cent. solution of ammonium molybdate is then added, and the heating continued for five minutes; in the presence of sugars a blue coloration is produced, which may be compared with previously prepared samples. The colour thus produced may be simulated by solutions of copper sulphate prepared to represent the coloration produced by 1 part of sugar in 20,000, etc.

The sugar in waste waters and condenser water may be also conveniently estimated by evaporating a large quantity, say, two litres, to a volume of 100 c.c. and determining the sugar by the polariscope or by ascertaining the reducing sugars after inversion.

In making the calculations, the quantity of water used in the condenser is estimated from the difference in temperatures of the incoming and outgoing water combined with a knowledge of the quantity and pressure of the steam given off in the last body. The experiments of the writer (cf. Chapter XVIII) have shown that the steam given off in the last body is nearly $1/n$th of the total evaporation, where n is the number of units.

The Determination of Sucrose as opposed to Polarization.—It only occasionally happens that sucrose is the sole optically-active body present in a material presented for analysis. Should other active bodies be present they will be returned as sucrose with an influence either positive or negative. The influence of such adventitious bodies may be eliminated by the following procedure developed by Clerget[74] at the instigation of Biot. Let x be the rotation due to sucrose and let y be that due to other active bodies. Then, if d be the direct polarization, $d = x + y$. Let an operation be made on x changing the value of x to $a\,x$, the value of y remaining unchanged. If i be the reading now observed in the polarimeter, $i = a\,x + y$. Subtracting this second equation from the first, $d - i = x + y - ax - y = x\ (1 - a)$, whence $x = \frac{d - i}{1 - a}$, so that if a be known, x, or the rotation due to the sucrose alone, can be calculated. The quantity $1 - a$, or generally $(1 - a) \times 100$ is known as the Clerget constant. The operation by means of which this determination is made is the inversion or hydrolysis of sucrose under the influence of a catalyst into equal parts of glucose and fructose. The catalyst usually employed in analysis is hydrochloric acid, and in the immediately succeeding pages reference is made solely to this means. Sucrose after inversion into glucose and fructose (invert sugar) possesses a left-handed rotation, so that the value of a in the equation above is negative and $1 - a$ is greater than unity. The reading after the operation, or the inverted reading, i, will also be negative unless the value of y is sufficiently great to counterbalance the negative rotation of the invert sugar formed.

In order that this analysis may be justified, the following postulates are necessary.

1.—The operation of inversion must be conducted in such a way that the same value can always be found for a.

2.—The influence of temperature and concentration must be accurately known.

3.—The value of y must remain unchanged.

Of these influences that due to temperature has always been recognised and allowed for; it is only recently that the other factors have been taken into consideration and the great majority of textbooks ignore them.

Temperature. The rotation of invert sugar decreases with rise of temperature and is such that

$$\frac{d - i}{1 - a - \frac{t}{200}} = \text{constant}$$

where a is the observed value at 0° C and t is the temperature of observation. This correction for temperature was given by Clerget and has been uniformly confirmed by all subsequent observers. For example, Clerget found that under his routine a sugar solution polarizing 100°, after inversion polarized $-44°$ at 0° C., $-39°$ at 10° C., $-34°$ at 20° C., etc. The Clerget constant, then, becomes $1 - (-0{\cdot}44) = 1{\cdot}44$, or, as generally expressed, 144, in which case $0{\cdot}5\,t$ is used as the temperature correction in place of $\frac{t}{200}$.

Method of performing the Inversion.—The methods of performing the inversion accepted as standard are many. They have been critically examined by Jackson and Gillis, and the following section is based largely on their work.

The original Clerget method of inversion was to place 50 c.c. of the material to be examined in a 50-55 c.c. flask, fill to the 55 c.c. mark with strong hydrochloric acid, heat to 68° C., taking 15 minutes to reach this temperature, allow to cool and polarize, adding 10 per cent. to the result or using a tube 10 per cent. longer than that used in the direct polarization. This method has always been used in France and is the one preferred by Browne. In 1883 the original procedure of Clerget was modified thus by Herzfeld[75]. Into a 100 c.c. flask, 50 c.c. of the material from the direct polarization is placed together with 20 c.c. water and 5 c.c. of 38 per cent. hydrochloric acid, sp. gr. 1·188. The flask and its contents are then heated to 67° C., taking 2·5 to 3 minutes to reach this temperature, which is afterwards kept as near as possible at 69° C. for 5 minutes and always between the limits 67—70° C. After cooling rapidly and completing to 100 c.c., the reading is observed.

These directions are frequently misquoted, acid of 38·8 per cent. strength sp. gr. 1·1198 being specified, and the total time of heating being extended to 10 minutes.

Jackson and Gillis[76] have shown that this routine is unsound since duplicates cannot be obtained, and since after a maximum value of a has been obtained its value falls so rapidly with continued heating that unavoidable deviations from one determination to another invalidate results. They show a maximum, constant with large deviation from the stipulated time, can be obtained by their method (*a*), or that of Walker (*b*) :—

(*a*) Seventy-five c.c. of material and five c.c. of 38·8 per cent. acid are placed in a water bath kept at 60° C., agitated for three minutes and allowed to remain in all for six minutes. If 10 c.c. of acid diluted 1 : 1 and 70 c.c. material are used, the total time of exposure is increased to 9·5 minutes.

(*b*) Seventy-five c.c. of material are placed in a flask and heated to 65° C., followed by the addition of 5 c.c. of 38·8 per cent. acid. The inversion is complete after 15 minutes' standing without further heating.

Methods employing inversion in the cold are in use and Tolman[77] probably first proposed them, using 5 c.c. of strong acid to 50 c.c. of material and allowing 10 hours at 26° C. and 20 hours at 20° C. for inversion. Steuerwald[78] used 30 c.c. of acid 1·1029 sp. gr. (38·8 per cent. acid diluted 1 : 1) and prescribed 2 hours' exposure if the temperature was 25° C. or over, and 3 hours if below 25° and above 20° C. Jackson and Gillis, for a total volume of 80 c.c. with 5 c.c. of 38·8 per cent acid, demand 30·8 hours at 20° C., 14·6 hours at 25° C., 7·1 hours at 30° C., 106 minutes at 40° C., and 29 minutes at 50° C. With 55 c.c. total volume and 5 c.c. 38·8 per cent. acid, the times are 21·2 hours at 20° C. and 10 hours at 25° C.

Concentration of the Acid.—The rotation of invert sugar varies with the concentration of the acid, and accordingly there will be found different constants depending on the concentration of the acid in material as presented for observation. The value found by Clerget, 16 grams sucrose and 5 c.c. strong acid, in a total volume of 55 c.c., was 1·44. The value under Herzfeld's procedure, 13 grms. sucrose and 5 c.c. of 38 per cent. acid in 100 c.c. was found by him as 1·4266. Other determinations with this acid concentration or with 38·8 per cent. acid and the same sucrose concentration are 1·4278 (Walker), 1·4288 (Tolman), 1·4305 (Steuerwald). With the greater proportion of acid (*v. sup.*) Steuerwald found 1·4554. These values are in some doubt since the use or otherwise of bichromate-filtered light is not stated. The very careful and exact determinations of Jackson and Gillis[76] give a value of 1·4325, referred to bichromate-filtered light, 13 grams of sucrose per 100 c.c. and 5 c.c. of 38·8 per cent. acid; and this value should be accepted as the most probable. The influence of concentration is noteworthy and the values of the constant given above refer only to that one particular concentration. The rotation of invert sugar falls with dilution and hence also the value of the Clerget constant.

Concentration of the Sugar.—A different constant obtains with each different concentration of sugar. In the Herzfeld routine the value of the constant is given by the expression $141.84 - \frac{i}{20}$ where i is the direct reading in the 20 cm. tube after the inversion, which at a concentration of 13 grams sugar per 100 c.c. gives the value 142.66. In the scheme given below due to Jackson and Gillis, and representative of the latest work, the appropriate value of the constant for each concentration and temperature is given in tabular form.

Constancy of the Value of y.—The presence of basic lead salts diminishes the rotation of the fructose originally present, which is afterwards restored in the process of inversion, thus giving a variable value of y (*v. sup.*). Pellet[79] was the first to correct for this, and he acidified the material used for the direct reading with sulphurous acid. This process reads as follows:—Two hundred c.c. of normal weight solution of material are placed in a 220 c.c. flask, clarified with basic lead acetate, completed to 220 c.c. and filtered. One hundred c.c. of the filtrate are treated with 30 c.c. sulphurous acid in saturated solution, made up to 200 c.c., filtered if necessary, and observed. A second portion of the original filtrate from the lead clarification is used to obtain the invert reading. The rotation due to the sucrose is then obtained after making the necessary allowance for dilution and selecting the appropriate constant. The method generally used in Java, due to Tervooren,[80] makes a similar correction in principle, acidifying the filtrate from the lead clarification with acetic acid.

These last two methods eliminate a very substantial source of error, but still do not fulfil the postulate that there be no change in the value of y (*v. sup.*), since the media in which the direct and inverted readings are made are not the same. An attempt to eliminate this error is due to Andrlik, who proposed to take the direct reading in the presence of urea and hydrochloric acid, the former body inhibiting inversion long enough to allow an observation to be made; this method has not found general acceptance. That method which most nearly meets all the conditions necessary for accuracy is the *double neutral polarization* method first proposed by Saillard.[81] In his method a quantity of sodium chloride, equivalent to the hydrochloric acid used in inversion, is added to the material used for direct polarization, and, after inversion, the hydrochloric acid present is exactly neutralized with caustic soda. There thus result two systems similar except for the essential change of sucrose to invert sugar which it is the object of the analysis to obtain. The method of Saillard has been developed by Jackson and Gillis, who use ammonia as the neutralizing agent, and take the direct reading in the presence of the appropriate quantity of ammonium chloride. They call particular attention to the necessity of exactitude in the analysis, failing which, errors, other than those intended to be eliminated, may be introduced. A scheme, one of several proposed by them, but quite general, is quoted below, and it may be mentioned that this scheme takes into account the effect upon the rotation of cane sugar of the ammonium chloride used in the direct reading.

Jackson and Gillis' General Double Neutral Polarization Method.—Reagents: Hydrochloric acid $d\ \frac{20^\circ}{4^\circ}$ 1·1029 (24·846 Brix); ammonium hydroxide solution, 5 to 6 N; solution of ammonium chloride containing 226 grams per litre; pulverized potassium or sodium oxalate.

Ascertain by at least three concordant titrations in the presence of methyl orange the volume of the ammonia solution required to neutralize 10 c.c. of the hydrochloric acid.

Prepare the normal solution of the substance to be analysed or a solution of such fractional normality as the nature of the material and the sensibility of the saccharimeter will permit. Clarify with the minimum quantity of dry basic lead acetate. Shake thoroughly and filter.

(If desired, the solution may at this point be freed from lead; but, if this is done, the de-leading reagent must be added to the whole filtrate. Finely pulverized potassium oxalate in minimum quantity is added until precipitation is complete. Filter. If this procedure is omitted, the lead is precipitated satisfactorily by the chlorides added later).

Pipette into two 100 c.c. flasks two equal volumes of the filtrate (50 c.c. 70 c.c., or 75 c.c.).

For the direct polarization, add to one portion 15 c.c. of the ammonium chloride solution or 3·392 grams of dry ammonium chloride. Complete to volume at the temperature at which the observations are to be made; filter, if necessary, and polarize.

For the invert polarization as follows: Pipette 50 c.c. into a 100 c.c. flask, add 20 c.c. of water and 10 c.c. of hydrochloric acid, $d\ \frac{20}{4}$ 1·1029; immerse in water bath at 60° C. for 9 min., agitating continually and cool quickly. After the solution has become quite cold, add from a burette while continually shaking the precisely determined volume of ammonia required to neutralize the acid. Adjust the temperature, make to volume, filter, if necessary, and polarize at carefully controlled temperature.

Multiply both polarizations by the factor—

$$\frac{\text{Volume of original solution containing 26 grams of sample.}}{\text{Volume of solution taken for polarization.}}$$

The algebraic difference between the corrected polarizations gives $P-P'$. If the original filtrate contained 26 grams in 100 c.c., refer to the following table, and under the column which designates the volume taken for the invert polarization find the value of the divisor. Apply the temperature correction and divide into $P-P'$. If the original solution contained a fraction of 26 grams of the sample, multiply $P-P'$ by this fraction before referring to the following table. Divide into $P-P'$

P—P′	Volume of solution taken for invert polarization.				Temperature corrections (to be subtracted).									
	50c.c. × 2	70c.c. × $\frac{10}{7}$	75c.c. × $\frac{4}{3}$	90.91c.c × $\frac{11}{10}$										
134.06	……..	……..	……..	134.06	20.0	0.00	23.0	1.59	26.0	3.18	29.0	4.77	32.0	6.36
133.78	……..	……..	133.78	………..	20.1	0.05	23.1	1.64	26.1	3.23	29 1	4.82	32.1	6.41
133.69	……..	133.69	……..	………..	20.2	0.11	23.2	1.70	26.2	3.29	29.2	4.88	32.2	6.4
133.34	133.34	……..	……..	………..	20.3	0.16	23.3	1.75	26.3	3.34	29.3	4.93	32.3	6.52
133	133.34	133.68	133.77	134.04	20.4	0.21	23.4	1.80	26.4	3.39	29.4	4.98	32.4	6.57
130	133.32	133.66	133.74	134.01	20.5	0.27	23.5	1.86	26.5	3.44	29.5	5.04	32.5	6.63
125	133.29	133.62	133.69	133.95	20.6	0.32	23.6	1.91	26.6	3.50	29.6	5.09	32.6	6.68
120	133.25	133.57	133.65	133.89	20.7	0.37	23.7	1.96	26.7	3.55	29.7	5.14	32.7	6.73
115	133.22	133.52	133.60	133.84	20.8	0.42	23.8	2.01	26.8	3.60	29.8	5.19	32.8	6.78
110	133.18	133.47	133.55	133.78	20.9	0.48	23.9	2.07	26.9	3.66	29.9	5.25	32.9	6.84
105	133.15	133.43	133.50	133.72	21.0	0.53	24.0	2.12	27.0	3.71	30.0	5.30	33.0	6.89
100	133.12	133.38	133.45	133 66	21.1	0.58	24.1	2.17	27.1	3.76	30.1	5.35	33.1	6.94
95	133.09	133.34	133.40	133.60	21.2	0.64	24.2	2.23	27.2	3.82	30.2	5.41	33.2	7.00
90	133.06	133.29	133.35	133.54	21.3	0.69	24.3	2.28	27.3	3.87	30.3	5.46	33.3	7.05
85	133.02	133.25	133.30	133.48	21.4	0.74	24.4	2.33	27.4	3.92	30.4	5.51	33.4	7.10
80	132.99	133.20	133.25	133.42	21.5	0.80	24.5	2.39	27.5	3.98	30.5	5 57	33.5	7.16
75	132.95	133.16	133.21	133.36	21.6	0.85	24.6	2.44	27.6	4.03	30.6	5.62	33.6	7.21
70	132.92	133.11	133.16	133.30	21.7	0.90	24.7	2.49	27.7	4.08	30.7	5.67	33.7	7.26
65	132.89	133.07	133.11	133.24	21.8	0.95	24.8	2.54	27.8	4 13	30.8	5.72	33.8	7.31
60	132.86	133.02	133.06	133.18	21.9	1.01	24.9	2.60	27.9	4.19	30.9	5.78	33.9	7.37
55	132.82	132.97	133.01	133.12	22.0	1.06	25.0	2.65	28.0	4.24	31.0	5.83	34.0	7.42
50	132.79	132.92	132.96	133.06	22.1	1.11	25.1	2.70	28.1	4.29	31.1	5.88	34.1	7.47
45	132.75	132.88	132.91	133.00	22.2	1.17	25.2	2.76	28.2	4.35	31.2	5.94	34.2	7.53
40	132.72	132.83	132.86	132.94	22.3	1.22	25.3	2.81	28.3	4.40	31.3	5.99	34.3	7.58
35	132.69	132.79	132.81	132.88	22.4	1.27	25.4	2.86	28.4	4.45	31.4	6.04	34.4	7.63
30	132.66	132.74	132.76	132.82	22.5	1.33	25.5	2.92	28.5	4 51	31.5	6.10	34.5	7.69
25	132.63	132.70	132.71	132.76	22.6	1.38	25.6	2.97	28.6	4.56	31.6	6.15	34.6	7.74
20	132.60	132.65	132.66	132.70	22.7	1.43	25.7	3.02	28.7	4.61	31.7	6.20	34.7	7.79
15	132.56	132.60	132.61	132.64	22.8	1.48	25.8	3.07	28.8	4.66	31.8	6.25	34.8	7.84
10	132.53	132.55	132.56	132.58	22.9	1.54	25.9	3.13	28.9	4.72	31.9	6.31	34.9	7.90
5	132.49	132.50	132.51	132.52	23.0	1.59	26.0	3.18	29.0	4.77	32.0	6.36	35.0	7.95

[Sucrose+3.392 grams of NH_4Cl = +99·43° S ; (13 grams of invert sugar+3.392 grams of NH_4Cl) × 2 = —33·91° S]

Example.—Twenty-six grams of a sample were dissolved in 300 c.c. of solution. Two 75 c.c. portions were taken, prepared for direct and invert polarization, respectively, and finally made up to 100 c.c. The direct polarization multiplied by 300/75 = 4 proved to be 38·75. The invert polarization multiplied by 4 was — 16·22 at 22·4° C. *P—P′* was thus 54·97. Since the original sample was in 1/3 normal solution the actual concentration of sucrose was proportional to 1/3 × (*P—P′*) or 18·32. Opposite 18·32 and under the column "75 c.c. taken" we find the divisor to be 132·63. This is diminished by 1·27 for the temperature correction to give 131·36, which divided into 54·97 gives 41·85 per cent. sucrose.

Other Inversion Methods.—There are two other inversion methods which fulfil all the postulates demanded for accuracy. These are the method of inversion by invertase first suggested by Kjeldahl[82] and the alumina-baryta defecation method of the writer. The former method has been developed by O'Sullivan[83], Hudson[84] and Ogilvie[85], and the routines of the two last named are given here.

As carried out by Ogilvie, the sugar material is dissolved in 200 c.c. of water : 100 c.c. of this solution is treated with sulphurous acid to precipitate the lead followed by calcium carbonate to neutrality and made up to 200 c.c. After filtering, aided if necessary by alumina cream or kieselguhr, the direct reading is observed; 50 c.c. of this filtrate is heated with 0·5 gram pressed yeast at 55° C. for 4½ hours, made up to 55 c.c. and filtered. This material serves to give the inverted reading.

Hudson[84] has worked out the following routine for preparing an invertase of great activity :—

" To prepare a stock solution of invertase, break up 5 lbs. of pressed yeast, which may be either bakers' or brewers' yeast, add 30 c.c. of chloroform to it in a closed flask, and allow it to stand at room temperature over night. By morning the solid mass will have become fluid and it should then be filtered through filter paper, allowing several hours for draining. To the filtrate add neutral lead acetate until no further precipitate forms, and again filter. Precipitate the excess of lead from the filtrate with potassium oxalate and filter. To this filtrate add 25 c.c. of toluene and dialyse the mixture in a pig's bladder or collodion membrane for two or three days against running tap water. The dialysed solution is colourless, perfectly clear after filtration, neutral to litmus, has a solid content of about half of 1 per cent., an ash content of a few hundredths of 1 per cent., will keep indefinitely in an ice box, if a little toluene is kept on its surface to prevent the growth of micro-organisms, and is exceedingly active in inverting cane sugar. This invertase solution does not reduce Fehling's solution."

Of this preparation 5 c.c. is used. Hudson performs the inversion at room temperature and effects the de-leading with potassium carbonate or oxalate.

In both these schemes, the rate of inversion is very much increased, as was shown by O'Sullivan, by the simultaneous presence of very small quantities of free acid. Hudson states that the maximum activity with hydrochloric acid occurs at a concentration of one-thousandth normal.

In the method proposed by the writer[86] the solutions required are those of the alumina-baryta method of defecation given earlier in this chapter. To 50 c.c. of material the stated quantity of aluminium sulphate and sulphuric acid is added, after which the flask and its contents are immersed in a bath of boiling water for 30 minutes to obtain inversion. After cooling, the defecation is then made by the addition of the exact equivalent of baryta, and then, after completing to volume and filtering, the reading in the polarimeter is made. This method has not yet been subjected to independent critical examination.

Both of these methods require the determination of the Clerget divisor. Ogilvie found 1·416 as the value for 13 grams in 100 c.c. Both Browne and Jackson and Gillis incline to 1·420 as the value, and introducing the factor for concentration the probable value should be $142{\cdot}0+0{\cdot}0676\,(m-13)-\frac{t}{2}$ where m is the number of grams sucrose per 100 c.c. and t is the temperature.

Methods depending on the Destruction of Reducing Sugars.—Dubrunfaut[85] first observed that reducing sugars heated with alkalies tended to give a product almost inactive optically, and proposed the application of this observation to analyses. Two later applications are described below.

Pellet and Lemeland's Method.[87]—Fifty c.c. of a solution of molasses, containing not more than 5 per cent. of reducing sugars, are transferred to a 300 c.c. flask. To this is added 7·5 c.c. of caustic soda of 36° Baumé and 75 c.c. of hydrogen peroxide 10 per cent. by volume. The flask and its contents are maintained at 100° C. for 20 minutes. After cooling and neutralizing, clarification is effected with basic lead acetate and the reading obtained, which is intended to afford that due to cane sugar alone. Actually, however, it has been found that the optical inactivity of the reducing sugars is not absolute, although it is reduced to a very small quantity.

Muller's Routine.[88]—Muller obtains the optical inactivity of the reducing sugars as under :—A solution of 25 grams Rochelle salts, 32 grams caustic soda, and 11 grams bismuth subnitrate, is made up to 500 c.c. Fifteen c.c. of this solution is heated with 20 grams of molasses at 100° C. for 15 minutes. After making up to 300 c.c. with the addition of basic lead acetate, the solution is filtered and transferred to a flask graduated at 100–110 c.c. It is acidified with acetic acid and treated, if necessary, with a little especially prepared decolorizing carbon. The volume is completed to 110 c.c., and the filtrate used for the observation.

Errors due to Dark Colour after Inversion.—Very often the inverted solution is so dark-coloured that it has to be observed in extreme dilution. A decolorizing effect is obtained by the addition of a crystal of sodium sulphite, by the use of sulphurous acid (Pellet's process *supra*), by the action of nascent hydrogen following on the addition of zinc dust to the inverted solution (Lindet[89]), and, best of all, by the limited use of bone char. In the strong acid solution the absorption, if any, of sugars by the small quantity necessary is undetectable by ordinary means. Pellet's sulphurous acid process also affords very light-coloured solutions.

The Determination of Sucrose as Invert Sugar.—Since cane sugar is quantitatively converted into equal quantities of glucose and fructose, this reaction affords a process when properly conducted of accurately estimating cane sugar. It may be carried out, for example, as under :—Prepare a solution of the material, such that it contains not more than 2 grams total sugars per 100 c.c. Take 100 c.c. of this material, clarify with basic lead acetate, and de-lead with potassium oxalate, and make up to 200 c.c. and filter. Determine the reducing sugars in this filtrate. Place 50 c.c. of the filtrate in a 100 c.c. flask, invert by any of the processes given above, neutralize, make up to 100 c.c., and determine the reducing sugars in the inverted solution. An example of this method of calculation to be used follows :—20 grams of molasses were dissolved in 1,000 c.c. Fifty c.c. of the de-leaded filtrate in Munson and Walker's routine afforded 0·1510 gram copper, equivalent to 0·0760 gram invert sugar (using column 4 of Munson and Walker's table*). Fifty c.c. of the inverted solution gave 223·8 grams copper, equivalent to 0·1174 gram invert sugar (using column 3 of Munson and Walker's table). The invert sugar present in 50 c.c. of the inverted solution is then $0{\cdot}1174 - \frac{0{\cdot}1760}{2} = 0{\cdot}0794$ gram, which is equivalent to $0{\cdot}0794 \times 0{\cdot}95 = 0{\cdot}0754$ gram cane sugar, and the percentage of cane sugar in the molasses is $0{\cdot}0754 \times \frac{4000}{50} \times \frac{100}{20} = 30{\cdot}16$ per cent.

In this example clarification is effected with basic acetate of lead, and, if the reducing sugars originally present in the molasses are required, this scheme must not be followed. Clarification in this case must be obtained

---

* See Appendix.

with kieselguhr or alumina cream ; where, however, the sucrose is especially sought, more disturbing elements will be eliminated by the use of basic lead acetate. The principles discussed in the chapter on the Determination of Reducing Sugars are equally applicable here.

Although quite logical and academically correct, this method does not seem to have been subjected to a critical survey. Some careful analyses of cane juices once made by the writer gave such discordant results as to lead to the supposition that some disturbing factors enter into the determination.

The Separation of Sugars in Mixtures.—The method of solution of this problem was first given by Apjohn[90] in 1869. It has been developed especially by Browne,[91] whose treatment is followed here.

1. The reducing power of the sugars is expressed in terms of glucose, the reducing power of which is put equal to unity. The reducing power of the commoner sugars investigated by Browne is given in Chapter XXVI.

2. The optical rotation of the sugars is expressed in terms of cane sugar, the rotation of which is put equal to unity. According to Browne these are :—

Cane Sugar	1·000
Glucose	0·793
Galactose	1·21
Arabinose	1·571
Xylose	0·283

Fructose.—The rotation varies so much with temperature that special numbers have to be calculated for each temperature. The factors calculated from the formula of Jungfleisch and Grimbert[92] are :—

	Concentration.						
Temperature.	1 per cent.	2 per cent.	3 per cent.	4 per cent.	5 per cent.	10 per cent.	25 per cent.
15	1·384	1·385	1·387	1·389	1·390	1·398	1·422
20	1·341	1·343	1·345	1·346	1·348	1·356	1·380
25	1·299	1·301	1·303	1·304	1·306	1·314	1·338
30	1·257	1·259	1·261	1·262	1·264	1·272	1·296

Let x = per cent. of a given sugar A.
Let y = per cent. of a given sugar B.
Let a = glucose ratio of sugar A.
Let b = glucose ratio of sugar B.
Let R = per cent. of reducing sugars as dextrose.
Then $ax + by = R$ .. .. (1)
Let A = polarization factor of sugar A.
Let B = polarization factor of sugar B.
Let P = polarization of mixture, i.e., reading in Ventzke scale in 20 cm. tube for 26 grms. of sugar in 100 c.c.
Then $\mathrm{A}x + \mathrm{B}y = P$ .. .. (2)

Suppose, as is the most general case, that the mixture is one of cane sugar, glucose and fructose. The cane sugar is determined by the process of double polarization. The difference between the value of the double polarization and the single polarization is the sum of the polarization of dextrose and levulose and P is the equation (2).

The values of x and y can then be found by solving the two simple simultaneous equations.

It must be remembered, however, that in cane products unfermentable reducing sugars occur, so that only approximate results can be obtained.

The Simultaneous Determination of Cane Sugar and Raffinose.—The official German method due to Creydt[93] is as follows :—

The direct reading is taken at 20° C.

The material is inverted according to the official Clerget process.

Let A = direct reading, B = reading after inversion, C = algebraic difference between A and B.

Then—

$$\text{Sugar per cent.}\quad \frac{C - 0{\cdot}493A}{0{\cdot}81}$$

$$\text{Raffinose per cent.}\quad \frac{A - S}{1{\cdot}54}$$

Pieraert's[94] process is as follows :—

Ten grms. of material are dissolved in 100 c.c. ; this solution serves to give the direct reading. Fifty c.c. of this solution are transferred to a 100 c.c. flask, to which are added 10 c.c. of a 20 per cent. solution of citric acid, and the mixture boiled for 15 minutes in a flask to which is attached a reflux condenser ; after making up to 100 c.c. and cooling, the inverted reading is taken. Then if x and y are quantities of cane sugar and of hydrated raffinose in 100 c.c. of solution, and a and b are the readings before and after inversion,

$$x = 9{\cdot}287a - 18{\cdot}31b$$
$$y = 3{\cdot}659A + 11{\cdot}652b$$

The Simultaneous Determination of Cane Sugar, Invert Sugar, and Raffinose.—The following scheme is due to Wortmann[95] :—

The reducing sugars are determined and calculated according to the formula $R = \frac{47C}{q}$, R being the per cent. reducing sugars, C the weight of copper, and q the quantity of material used.

The direct and invert readings are then obtained according to the official German method.

Then :—

$$\text{Per cent. cane sugar} = \frac{0{\cdot}9598A - 1{\cdot}85B - 0{\cdot}277R}{1{\cdot}5648}$$

$$\text{Per cent. raffinose} = \frac{A - S \times 0{\cdot}3103N}{1{\cdot}85}$$

where A and B are the direct and invert readings.

Determination of Fibre in Cane and Bagasse.—Fibre in cane sugar-house work refers to everything insoluble in water. It is therefore to be carefully distinguished from the "*Crude fibre*" of plant analysis or from its chief constituent, cellulose. Methods for its determination are given below, the remarks under "Determination of Sugar in Cane" referring to comminution being equally applicable here.

1. *Differential Method.*—Dry the material and estimate the fibre by difference :—

Fibre per cent. = 100 — water per cent. — soluble solids per cent.

This method may be used with cane after extracting most of the juice in a hand-mill and determining the soluble solids in the expressed juice. Error is introduced since the composition of the juice remaining is not the same as that expressed. If the cane is comminuted with a Hyatt shredder the juice expressed and retained is of uniform composition due to the rupture of all the cells. In the case of bagasse taken from mills, it is often customary to accept the last mill juice or last roll juice as being the same as that of the juice retained in the bagasse.

In the routine of control of bagasse analyses, one portion of the sample is usually used for water determination and one for sugar. The soluble solids may be estimated directly in the sugary extract obtained, and if the analysis, as is convenient, is made with constant quantities of bagasse and water an exact mechanical average of a day's run can be obtained in one analysis by combining equal quantities from each sugar determination. In a series of tests made by the writer[59] it was found that, due to a compensation of errors, the use of the polarization gravity purity of the last mill juice to calculate the soluble solids in the bagasse (*cf.* Chapter XXVII) gave results almost exactly the same as the use of the dry substance in the extract.

2. *Direct Methods.*—Extract the finely divided sample in a Soxhlet apparatus using water as the solvent, dry and weigh. This method demands the use of very small quantities of material. It is objectionable, since prolonged exposure to hot water does not obtain in the process of milling, and the object of the analysis is to control this process and not to determine matter insoluble in hot water. A similar objection lies against the use of alcohol as a solvent. The most rational method is the use of cold water. One way of application is to immerse the material for a long period in a linen bag in a stream of water, followed by subsequent pressure and drying. The time required may be much shortened by the use of a hydraulic or powerful screw press. The type shown in *Fig.* 341 is useful and can be readily constructed in the plantation workshop. After each pressing the wad of bagasse is loosened, additional water placed in the pot and pressure again applied until extraction is complete.

Determination of Ash.—Weigh out from five to ten grams of material in a dish, preferably of platinum. Heat gently till gases no longer escape, and finally at a low red heat. Moisten with a solution of ammonium carbonate, expel the excess at a moderate heat and weigh. The result is returned as carbonate ash.

In place of returning carbonate ash, the sulphate ash is often returned. In this process the preliminary carbonization is effected by sulphuric acid. It is attempted to reduce the results to carbonate ash by a deduction of 10 per cent. A whole series of investigations, dating from Violette[96] in 1873 to Ogilvie and Lindfield[97] in 1918, have demonstrated that this correction is generally much too small. The average of the last-named chemists' results indicate an average correction of the order rather over 15 per cent., with, however, very irregular results, the correction varying from 6 per cent. to 26 per cent., with only four results out of thirty-six giving a value of 10 per cent. or under.

The continued use of the 10 per cent. deduction is an instance of the persistence of a once accepted error in spite of numerous protests.

Determination of Gums.—By gums are meant those bodies insoluble in alcohol; 100 c.c. of juice are concentrated to a volume of about 20 c.c., and poured into 100 c.c. of 90 per cent. alcohol containing 1 c.c. hydrochloric acid. The precipitate is allowed to settle and washed by decantation with strong alcohol, collected on a tared filter paper, or, better, in a Gooch crucible, and dried to constant weight. The increase in weight gives gums and ash; the weight of ash is determined, and being deducted from the weight of gum and ash gives the weight of gum.

Acidity and Alkalinity.—100 c.c. of the juice are titrated from a burette with decinormal alkali; to the juice a few drops of phenolphthalein solution are added, the neutralization of the excess of acid being shown by the appearance of a pink coloration. The juice may be conveniently contained in a white porcelain basin. In this method the juice is alkaline to litmus before the appearance of the pink colour. A variation of this procedure is given in Chapter XIII.

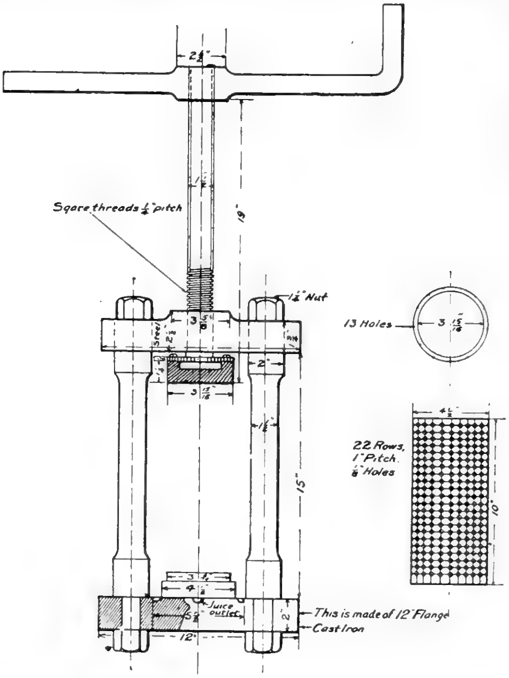

FIG. 341

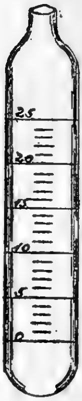

FIG. 342

Carbonated Juice.—The carbonation process, which is but sparingly used in cane sugar factories, requires special methods for its control; an abstract of the methods employed in beet sugar factories may be given here.

It is customary to determine the alkalinity of the juice of the first and second saturation in terms of lime as CaO; as this determination has to be done rapidly, special methods of moderate accuracy are employed. One of the simplest and most convenient is Vivien's. A standard acid containing 0·875 grm. H_2SO_4 per 1,000 c.c. is prepared: the acid is standardized against decinormal alkali; 10 c.c. of the latter are equivalent to 56 c.c. of the acid, which, when exactly made up, neutralizes volume for volume a solution containing 0·05 grm. lime per 1,000 c.c.; the indicator employed is phenolphthalein, which is placed in the stock of standard acid. The tube, *Fig.* 342, is filled to the zero mark, and the standard acid added; as long as lime is in excess, the juice remains red, becoming finally colourless when the lime is neutralized. Each ten divisions in the tube correspond to 0·1 grm. lime per 1,000 c.c. For juice of the second saturation a weaker acid, only one-fifth the strength of the above, is used.

The determination of the total lime in the juice is performed by the usual methods; 100 c.c. juice are heated to boiling, treated with ammonia in excess, and filtered, if necessary; the lime is precipitated by ammonium oxalate from the hot solution, boiled for two hours, filtered, washed, dried, and weighed as carbonate or sulphate.

The alkalinity of a juice is in part due to caustic soda and potash set free by the action of lime on the salts of the former present in the juice. When it is wished to determine the alkalinity due to lime and to soda and potash, Pellet's method may be used: 1. Determine the total alkalinity by titration with sulphuric acid, using litmus as an indicator and making the titration at the boiling point. 2. To a volume of the juice add an equal bulk of alcohol, which will precipitate the lime as an insoluble saccharate; filter, and in an integral part of the filtrate determine the alkalinity; the latter is due to free caustic potash and soda, but is expressed as lime for purposes of convenience: by determining the total lime, the combined lime can be likewise obtained.

Sulphited Juices.—In the control of sulphitation processes, the sulphurous acid free and combined is often determined as such. The means adopted is the titration of the material with a standard solution of iodine in potassium iodide. Starch is used as indicator, an intense blue colour appearing with the presence of free iodine. This analysis does not give acidity, but shows free and combined sulphurous acid. One-hundredth normal iodine contains 1·27 gram iodine per 1,000 c.c., and one c.c. is equivalent to 0·32 mgrm. of sulphur dioxide.

The Analysis of Limestone and Lime.—It is not general for sugar factories to prepare their own lime, but in the carbonation process it is necessary, and where a supply of limestone is abundant, as in Mauritius and Barbados, it is cheaper to burn lime than to import. The choice of limestone is important, and it is advisable also to keep a check on the composition of the purchased lime.

Moisture.—Dry 1–2 grms. to constant weight.

Sand, Insoluble and Organic Matter.—Dissolve about 1 grm. in hydrochloric acid, filter through a tared filter paper, wash and dry at 100° C., weigh, giving the weight of sand, etc., ignite and weigh obtaining the sand, the difference of the two weights giving the organic matter.

Soluble Silica.—Evaporate to complete dryness the filtrate from the determination of the sand, etc.; moisten the residue and again evaporate to dryness, keeping the residue at a temperature of 120° C. for an hour after the residue is apparently dry; take up with hot water, filter and wash till free of chlorides; dry, ignite, and weigh the residue as SiO_2.

Insoluble Silica.—Mix the residue obtained in the determination of the sand with four or five times its weight of fusion mixture, composed of molecular proportions of sodium and potassium carbonates, and keep at a red heat for half an hour after effervescence has ceased: dissolve out with dilute hydrochloric acid, evaporate to dryness and determine the silica as before.

Iron, Alumina.—Mix the filtrates from the determinations of soluble and insoluble silica; evaporate to convenient bulk, add ammonia till alkaline, and heat till the solution smells only faintly of ammonia; filter while hot; wash, dry, ignite, and weigh the precipitate as $Fe_2O_3 + Al_2O_3$. If there be present any large quantity of iron and alumina after decanting off the supernatant liquid, the precipitate should be dissolved in hydrochloric acid and re-precipitated.

Lime.—Precipitate the lime in the filtrate from the iron and alumina while boiling hot with ammonium oxalate; allow to stand for six hours, and filter, wash, dry and ignite the precipitate to constant weight and weigh as CaO; convert the lime to sulphate or carbonate by evaporation to dryness with either sulphate or carbonate of ammonia and again ignite, and weigh as $CaSO_4$, or as $CaCO_3$: $CaCO_3 \times 0{\cdot}56 = CaO$; $CaSO_4 \times 0{\cdot}4118 = CaO$.

Magnesia.—Precipitate the magnesia in the filtrate from the lime determination as phosphate by the addition of sodium phosphate: agitate the solution violently, and allow to stand for twelve hours; filter, wash with dilute ammonia, dry, ignite strongly and weigh as $Mg_2P_2O_7$: $Mg_2P_2O_7 \times 0{\cdot}3604 = Mg\,O$.

As magnesia is detrimental to the value of good limestone, Geerligs[98] has given a scheme for its rapid estimation. Two grams are dissolved in hydrochloric acid, evaporated to complete dryness, the residue brought into solution with hydrochloric acid, boiled after the addition of a few drops of nitric acid, and evaporated to small bulk. An excess of calcium carbonate is added to precipitate iron and alumina, the precipitate filtered off, and the filtrate collected in a flask to which an excess of lime water is added; the flask is filled nearly to the neck and set aside to settle; the supernatant liquid is decanted through a filter, and the precipitate washed by decantation. The precipitate from the lime water contains the magnesia: it is dissolved in hydrochloric acid, the lime precipitated as before by ammonium oxalate, and the magnesia determined in the filtrate.

The method of Sundstrom[99] for the rapid estimation of magnesia in limestones is as follows:—

Weigh out one grm. of material into a small dish, add about 100 c.c. water and 25 c.c. of normal hydrochloric acid: heat to boiling, allow to cool and titrate the excess of acid with normal caustic soda, thus obtaining the quantity of acid required to neutralize the carbonates of lime and magnesia. The lime is determined as usual and calculated to carbonate; if the percentage of calcium carbonate be divided by five, the quotient will give the number of c.c. of normal hydrochloric acid required to neutralize the calcium carbonate. The difference between that found above, as necessary to neutralize the lime and magnesia carbonates, and the calculated number of c.c. necessary for the lime alone, gives the number of c.c. requisite to neutralize the magnesia carbonate; this number, multiplied by 0·42, gives the percentage of magnesia carbonate.

Sulphuric Acid.—Dissolve about five grms, in dilute hydrochloric acid; separate the silica as before, and in the hot filtrate precipitate the sulphuric acid by barium chloride; allow to settle for six hours, filter, wash, dry, ignite, and weigh as $BaSO_4$: $BaSO_4 \times 0{\cdot}3427 = SO_3$: $BaSO_4 \times 0{\cdot}5828 = CaSO_4$.

The analysis of the lime is performed exactly as for limestone; very often large quantities of alkalies are found in the lime, especially if the limestone has been burnt with wood fuel in a short-flame kiln. In addition to the chemical analysis of the lime, a mechanical bulk analysis for the determination of stones, unburnt limestone, etc., may be made; very considerable quantities of these materials are often found. The following are special methods of lime analysis:—

Free Lime.—Dissolve about one grm. of lime in a 25 to 30 per cent. solution of sugar; make up to definite volume, filter and titrate an aliquot part of the filtrate with normal acid.

Unburnt and Slaked Lime.—Dissolve about one grm. of lime in a definite quantity of normal acid and determine the excess of acid by titration with normal alkali; the difference between the total lime, as thus found, and the free lime, as found above, gives the unburnt lime.

Degener-Lunge Method.[100]—Slake about one grm. of lime with water and titrate with normal acid, using phenacetoline as indicator. The point at which the indicator changes from yellow to red marks the neutralization of the free lime; the addition of acid being continued, the point at which the unburnt and slaked lime is neutralized is marked by a change from red to golden yellow.

REFERENCES IN CHAPTER XXV.

1. *Int. Sug. Jour.*, 1907, 99, 481.
2. *Int. Sug. Jour.*, 1915, 17, 360.
3. *Int. Sug. Jour.*, 1914, 16, 112.
4. *Chem. News*, 52, 280.
5. Bull. Assoc. Chim. Suc., 1893, 10, 656.
6. H.S.P.A. Ex. Sta., Agric. Ser., Bull. 32.
7. "Handbook for Cane Sugar Manufacturers," New York, 1915.
8. "Agricultural Analysis," New York, 1906.
9. *Ber.*, 1877, 10, 1043.
10. Publicacion Laboratorio chimici dele Gabelle, Rome, 1891, 47.
11. *Z. für Instr.*, 1896, 47.
12. *Ber.*, 1876, 9. 487, 1531: 1884, 17, 2234.
13. *C.R.*, 107, 390.
14. *Ann. Chem.*, 232, 169.
15. *Jour. Prak. Chem.* [2], 25, 114.
16. *Ber.*, 1880, 13, 1922.
17. *Ber.*, 1889, 22, 265.
18. *Jour. prak. Chem.* [2], 22, 97.

19. *Ber.*, 1884, 17, 2239.
20. *Ann. Chem.*, 271, 40.
21. "Chemie der Zuckerarten."
22. *Ber.*, 1881, 14, 1511.
23. "Handbuch der Kohlenhydrate."
24. *Ann Chim. Phys.*, 1840, 74, 401.
25. *Jour. Fab. Suc.*, 28, 42.
26. *Ann. Chim. Phys.*, 1899, 17, 125.
27. Erdmann's "Journal für praktische Chemie," 1842.
28. U.S. Bureau of Standards, Bull. 44.
29. *Jour. Ind. Eng. Chem.*, 1915, 7, 216.
30. *Zeit. Ver. deut. Zuck.*, 1917, 68, 407.
31. *Jour. Royal Agric. and Commercial Soc., B. Guiana*, Dec., 1895.
32. *Ber.*, 1877, 10, 1043.
33. *Ber.*, 1887, 20, 1848.
34. *Ber.*, 1877, 10, 1414.
35. "The Optical Rotation of Organic Substances."
36. *Zeit. Ver. deut. Zuck.*, 54, 521.
37. *Ann. Chim. Phys.* [2], 18, 201.
38. *Technological Quarterly*, 1889, 267.
39. *Jour. Am. Chem. Soc.*, 21, 268.
40. Java *Arch.*, 1903, 25, 879.
41. *W. Ind. Bull.*, 1901, 3, 140.
42. *Jour. Ind. Eng. Chem.*, 1909, 1, 567.
43. *Ber.*, 1890, 23, 3570.
44. *Int. Sug. Jour.*, 1908, 8, 455.
45. *Zeit. Ruben.*, 1875, 504.
46. *Int. Sug. Jour.*, 1907, 9, 13.
47. Revue Universelle de la Fabrication du Sucre, 1, 451.
48. *Int. Sug. Jour.*, 1903, 5, 376.
49. *Jour. Am. Chem. Soc.*, 1903, 26, 186.
50. U.S. Bureau of Standards, Bull. 3, 135.
51. *Jour. Chem. Soc.*, 1871, 9, 91.
52. *Jour. Soc. Chem. Ind.*, 1916, 35, 201.
53. *C.R.*, 1883, 157, 857.
54. *D. Zucker.*, 23, 1753.
55. *Bull. Assoc. Chim. Suc.*, 1897, 14, 141.
56. U.S. Bureau of Chemistry, Bull. 116, 73.
57. *Int. Sug. Jour.*, 1916, 18, 402.
58. *C.R.*, 16, 1,000; 22, 438; 23, 256.
59. *Jour. Federated Institutes of Brewing*, 1, 113.
60. *Bull. Assoc. Chim. Suc.*, 1899, 16, 337.
61. *Z. Zuck. Böh.*, 13, 559; 14, 343; 21, 189.
62. Comptes rendus, Carlsberg Laboratory, 7, 243.
63. "Handbook for Cane Sugar Manufacturers," New York, 1915.
64. U.S. Bureau of Standards, Circular 44.
65. *Int. Sug. Jour.*, 1905, 7, 331.
66. Java *Arch.*, 1908, 16, 3.
67. *Bull. Assoc. Chim. Suc.*, 1897, 14, 74.
68. *Int. Sug. Jour.*, 1915, 17, 213.

69. "Handbook for Cane Sugar Manufacturers."
70. "Manuel Agenda du Fabricant du Sucre."
71. *S.C.*, 1895, 27, 182.
72. *Monatshefte für Chemie*, 6, 198.
73. *Ber.*, 1905, 38, 3808.
74. *C.R.*, 16, 1,000; 22, 438; 23, 256.
75. *Z. Ver. deut. Zuck.*, 38, 699.
76. U.S. Bur. of Standards, Scientific Paper, 375.
77. U.S. Bur. of Chemistry, Bull. 73.
78. Java *Arch.*, 1915, 21, 1383.
79. *Bull. Assoc. Suc. Chim.*, 1912, 29, 366.
80. Java *Arch.*, 1904, 12, 321.
81. Transactions of the Eighth International Congress of Applied Chemistry.
82. Comptes rendus, Carlsberg Laboratory, 1, 192.
83. *Jour. Chem. Soc.*, 1891, 46, 61.
84. U.S. Bur. of Standards, Circular 44.
85. *Int. Sug. Jour.*, 1912, 14, 89.
86. *Int. Sug. Jour.*, 1915, 17, 179.
87. *Int. Sug. Jour.*, 1911, 13, 616; 1912, 14, 161.
88. *Int. Sug. Jour.*, 1916, 18, 274.
89. *Bull. Assoc. Chim. Suc.*, 1890, 7, 432.
90. Trans. Roy., Irish Acad., 1869, 24, 587.
91. *Jour. Am. Chem. Soc.*, 1906, 28, 4.
92. *C.R.*, 107, 390.
93. *Zeit. Ruben.*, 38, 367.
94. *Bull. Assoc. Chim. Suc.*, 1906, 23, 143.
95. *Zeit. Ruben.*, 39, 766.
96. *Ann. Chim. Phys.*, 1873, 29, 514.
97. *Int. Sug. Jour.*, 1918, 20, 114.
98. "Manufacture of Cane Sugar."
99. *Jour. Soc. Chem. Ind.*, 1893, 16, 520.
100. "Handbook for Beet Sugar Manufacturers."

CHAPTER XXVI

THE DETERMINATION OF REDUCING SUGARS

THE method adopted for the determination of reducing sugars is based on the property possessed by these bodies of reducing cupric salts to cuprous. This property was first used by Trommer[1] to distinguish grape sugar from cane sugar, and established as an analytical method by Barreswil[2]. The method was extended by Fehling[3], whose name is connected with the process.

Fehling himself concluded that one molecule of glucose reduced five atoms of copper and, accordingly, he specified that the copper solution should contain 34·56 grams of $CuSO_45H_2O$ in 1,000 c.c., since he found that 10 c.c. of a solution of this strength was reduced completely by 0·05 gram. of anhydrous glucose. This strength of solution is retained in the majority of the formulæ since proposed.

Much work has been done in connection with the process, and very many routines and modifications have been proposed. The essential step forward is due to Soxhlet[4], who observed that the quantity of cupric salt reduced is not a constant, but is dependent on the excess of copper which is present during analysis ; other important points recognised are that the quantity of copper reduced depends on the composition of the copper solution, on the period over which the re-action extends, and on a number of minor points.

There are a great number of sugars which reduce cupric salts, and their reducing powers[5] differ one from another. These reducing powers have been established by experiment and are, following Browne, conveniently referred to glucose as unity (*v. infra*). The reducing sugars found in cane products are mainly glucose and fructose, with occasionally small quantities of mannose and glutose. The last two sugars are found as the result of the action of alkalies on either the glucose or fructose which occurs naturally. Since the glucose and fructose occur in quantities not far removed from equal, it is well to calculate reducing sugar determinations in cane products as invert sugar.

The methods of analysis in use do not separate the reducing sugars as such, but indicate the reducing power calculated as dextrose, invert sugar, etc. Hence all bodies adventitiously present and which possess the property of reducing cupric salts are returned as reducing sugars.

The methods in use for the determination of reducing sugars fall into two classes :—

(*a*) A fixed quantity of copper solution of invariable composition is reduced by a fixed volume of the solution containing reducing sugars under fixed conditions. The quantity of reducing sugar used is insufficient to effect complete reduction of the cupric salt. The quantity of cupric salt reduced is obtained by one of many methods, whence the quantity of reducing sugar corresponding to the cupric salt reduced is obtained by reference to tables based on the examination of known quantities of reducing sugars. That due to Munson and Walker is given in the Appendix.

(*b*) To a fixed quantity of cupric salt is gradually added the solution containing the unknown quantity of reducing sugar. The addition is continued until all the cupric salt is reduced. Of routines following the first method there are many. Those most in use have been arranged by Brown, Morris and Millar[6], by Allihn[7], by Defren[8] and by Munson and Walker[9], whose method is selected for description.

Munson and Walker's Method.—Two solutions are required :—

1. 34·639 grams $CuSO_4$ 5 H_2O in 500 c.c.
2. 173 grams potassium sodium tartrate and 51·6 grams sodium hydrate in 500 c.c.

The quantity of sodium hydrate present should be controlled by analysis.

Place 25 c.c. each of the above solutions in a 400 c.c. Jena or non-sol beaker, followed by 50 c.c. of the reducing sugar solution. Heat upon asbestos gauze so that boiling begins in four minutes and continue ebullition for two minutes. Filter at once and determine the copper in the precipitate by one or other of the methods given below :—

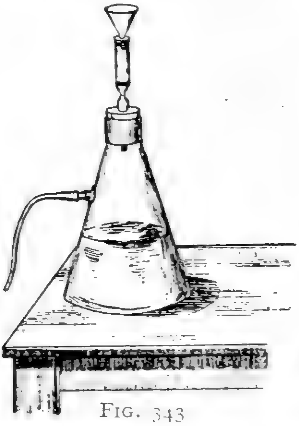

FIG. 343

The Filtration.—The filtration of the precipitated cuprous oxide may be made through asbestos, contained in a glass tube or Gooch porcelain crucible ; through an "alundum" crucible ; or again through spongy platinum. With these apparatus the filtration is effected under reduced pressure. Paper may be used in the absence of other appliances, but an error is introduced due to the absorption of copper sulphate by the paper.

The asbestos used for filtration should be the long fibre variety. It should be prepared for use by digesting with 33 per cent. hydrochloric acid for 48 hours, followed by digestion for an equal period with 10 per cent. caustic soda. After washing free from alkali it is preserved suspended in water.

The Soxhlet tube, *Fig.* 343, consists of a glass tube, about six inches long in all ; the upper portion is about three inches long and half an inch in diameter, and terminates in a concave bottom, to which is attached a short capillary of about 1/32 in. bore ; the lower half is about three inches long and in diameter tapers from 1/2 to 3/16 in. It is prepared for use thus :—A plug of glass wool is placed on the concave bottom of the tube and above this a pad of asbestos; the plug of glass wool should be about 3/8 in. deep and the asbestos about 1/16; the asbestos pad is most effectively formed by filling the tube with a suspension of the asbestos, and allowing it to settle gradually. It is then drained by the pump, dried, weighed and is ready for use. After the Soxhlet tube has been prepared, it is fitted into the stopper of the filter flask, and filled about three parts full with water; a small funnel is then fitted on to the tube, the stem of which does not quite reach to the level of the water in the tube. The funnel is then filled with water and the pump started; as the water passes through the filter, the liquid undergoing filtration is poured into the funnel, care being taken to keep the funnel full. When all the copper oxide has been brought into the funnel, the level of liquid is maintained by hot water until all the precipitate has passed into the Soxhlet tube and is continued until the washing is complete.

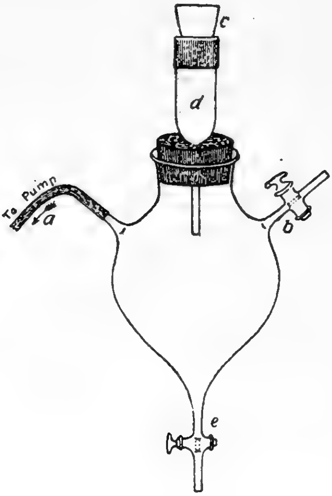

FIG. 344

FIG. 345

A Gooch crucible[10] consists of a tall crucible of conventional pattern, the bottom of which is a perforated disc. It is prepared for use as described for the Soxhlet tube, save that the pad of glass wool is unnecessary.

The filtration apparatus used in the laboratories of the Hawaiian Sugar Planters' Association is shown in *Fig.* 344. The filter flask is of the form due to Diamond[11]. The tube *a* communicates with the vacuum pump; connection with the atmosphere may be made by the cock on the tube *b*. The Gooch crucible *c* is held in the carbon tube *d*, a tight joint being made by a piece of inner tubing of a bicycle tyre. The filtrate may be discharged through *e*. The advantages of this apparatus for all vacuum filtrations are obvious.

The alundum crucible is made of a porous preparation of ignited alumina. It is prepared for use by boiling in nitric acid. It may be mounted as in *Fig.* 344; but in order to facilitate washing Spencer[12] has designed the holder indicated in *Fig.* 345.

The spongy platinum filtering surface due to Munro[13] is prepared by igniting ammonium platinum chloride placed on the bottom of a platinum or porcelain Gooch crucible. After ignition the mat of spongy platinum is pressed down carefully with a glass rod and manipulated until a satisfactory filtering surface is obtained.

Determination of the Reduced Copper. *As Cuprous Oxide.*—The cuprous oxide after collection by one or other of the above methods is dried to constant weight. The drying is materially accelerated by washing the precipitate first with alcohol and then with ether.

As Cupric Oxide.—If the cuprous oxide has been collected on paper the precipitate is, after drying, detached as completely as possible from the paper and ignited in a porcelain crucible. The paper and adhering cuprous oxide are burnt separately, the cuprous oxide being partly reduced to copper. The ash and reduced copper are placed in the crucible, a few drops of nitric acid added, evaporated to dryness and cautiously ignited. If collected in a Soxhlet tube, the narrow end of the tube is connected by rubber tubing to a vacuum pump, and a current of air is sucked through the layer of cuprous oxide. At the same time the tube is heated over a small flame, when the cuprous oxide is seen to glow and is rapidly converted into cupric oxide. If a Gooch crucible has been used, it and its contents are heated at a low red heat, care being taken to prevent the reducing gases of the flame entering the crucible, an end which is best obtained by placing the crucible containing the cuprous oxide inside a second one.

As Copper, by Reduction in Hydrogen.—The precipitate of cuprous oxide conveniently collected in a Soxhlet tube is attached to an apparatus generating hydrogen, and a current of hydrogen is passed through the tube. On gently heating the tube, the cuprous oxide is rapidly reduced to metallic copper.

According to Perrault[14] the hydrogen should be purified by being passed through towers containing:—

a. Crystals of iodine, mixed with pumice stone.
b. Caustic soda.
c. Potassium permanganate 5 per cent., in caustic soda of density 1·32
d. Potassium bichromate in concentrated sulphuric acid.

By Reduction in Alcohol.—This method was originally proposed by Votocek and Lexa[15]. As carried out by Wedderburn[16] the cuprous oxide is collected in an alundum crucible. Some alcohol is made to boil in a beaker and the heated crucible with its contents placed therein on a stand. The crucible should not be heated sufficiently to ignite the alcohol. After placing the crucible in the beaker, the latter is covered with a clock face. Reduction to copper is rapid and complete.

By Electrolytic Deposition.—In the United States Agricultural Department's laboratory the copper is obtained by electric deposition; the cuprous oxide is dissolved in nitric acid, and collected in a platinum basin of about 175 c.c. capacity; after the addition of 3–4 c.c. sulphuric acid, the copper is ready for deposition, which is thus effected by Spencer[17].

"Where a direct current is used in lighting the sugar-house, it is the most convenient source of electricity for depositing the copper. The current must be passed through a resistance or regulator in addition to the lamp. A convenient and durable regulator is shown in *Fig.* 346; *c* is a glass tube partly filled with water slightly acidulated with sulphuric acid; the wire *a* connects with a platinum sealed into the tube; *b* is a glass tube through which a copper wire extends and connects with a platinum wire *e* sealed into this tube. The tube *b* may be slipped up and down, thus regulating the distance between the wires *e* and *a*, and regulating the current. The twin wire *m* is separated, severed, and one end *d* connected with the platinum dish in which the copper is to be deposited, and the other with the regulator *b*, thence through the acidulated water, and *a* with the platinum cylinder suspended in the copper solution. Sufficient current for a large number of dishes arranged in sets of four will pass through a 16 C.P. or 32 C.P. lamp. The copper should be deposited very slowly. Usually, if the apparatus be connected when the lights are turned on in the evening, all the copper will be deposited before they are turned off in the morning."

By the Permanganate Process.—In this process the cuprous oxide is dissolved in a concentrated solution of ferric sulphate in 25 per cent. sulphuric acid; the ferric oxide is reduced by the cuprous oxide according to the equation:

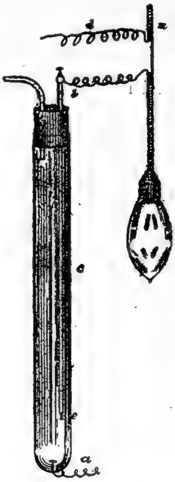

FIG. 346

$$5\ Cu_2O + 5\ Fe_2(SO_4)_3 + 5\ H_2SO_4 = 10\ CuSO_4 + 10\ FeSO_4 + 5H_2O,$$

and the ferrous sulphate formed is estimated by titration with potassium permanganate.

The exact copper value of the permanganate should be determined by direct assay against a pure preparation of a copper salt.

A solution of a ferric salt will always decolorize a few drops of decinormal permanganate, and hence a fixed quantity of the ferric solution should be adhered to; by standardizing the permanganate under the conditions of the subsequent assays, this source of error is automatically removed.

Iodometric Process.—The reactions involved are:—

$$2\ Cu(CH_3COO)_2 + 4\ KI = 2\ CuI + 4\ KCH_3COO + I_2$$
$$2\ Na_2S_2O_3 + I_2 = 2\ NaS_2O_3 + 2\ NaI.$$

From the above equations it follows that 126·8 parts of iodine are equivalent to 63·5 parts of copper.

The precipitated cuprous oxide is dissolved in nitric acid, the excess of acid partly removed by evaporation, neutralized with a slight excess of sodium carbonate, and the precipitate redissolved with acetic acid. A slight excess of potassium iodide over that indicated as necessary from the above equation is added, and the iodine determined in the usual way with sodium thiosulphate, using starch as an indicator.

The thiosulphate solution should be standardized against pure electric copper or a pure preparation of a copper salt.

Choice of Form in which the Copper is estimated.—If the material analysed is a pure reducing sugar, the reduced copper may be estimated as cuprous oxide, as cupric oxide, as metallic copper or volumetrically with identical results. With materials such as cane molasses, a precipitate other than that of cuprous oxide may be thrown down and hence the weight found will be in excess of that due to the reduced cupric salt. If the cuprous oxide be burnt to cupric oxide, the only contamination will be that due to ash. The most exact methods are probably the estimation as copper deposited electrolytically, and as copper estimated iodometrically. The estimation by permanganate is likely to be falsified by the presence of organic matter in the cuprous precipitate. Meade and Harris[18] have shown that the results with cane molasses are almost identical when the estimation is made as cupric oxide, as reduced copper or iodometrically.

Glucose Ratio of Sugars and Munson and Walker's Table.—Munson and Walker's table concerns invert sugar, glucose, lactose and maltose. By establishing the reducing ratio of the sugars, that for invert sugar may be used for any sugar. Accordingly, only the values for invert sugar and invert sugar and sucrose are recorded in their table in the Appendix. These are specially applicable to cane sugar work, where the mixture of reducing sugars is never far removed from invert sugar. The table has also been altered by substituting the weight of cupric oxide for cuprous oxide.

The reducing ratios of the commoner reducing sugars compared with anhydrous glucose as unity are thus given by Browne[19] :—

Glucose, 1·000 ; Fructose, 0·915 ; Xylose, 0·983 ; Arabinose, 1·002 ; Invert Sugar, 0·957 ; Galactose, 0·898 ; Lactose, H_2O, 0·678 ; Maltose, H_2O, 0·620.

The Effect of Cane Sugar on the Determination of Reducing Sugars.—Cane sugar, by itself, has only a very small reducing power, but in the presence of reducing sugars, especially when the cane sugar is in great excess, the effect is sufficient to invalidate the analysis. This behaviour is allowed for in Munson and Walker's tables, and the analysis should be so conducted that the quantities of material taken are substantially those for which these tables are drawn up.

Preparation of Materials for Reducing Sugar Assay.—Many cane sugar products, without previous treatment, afford a copper precipitate which is incapable of filtration. Certain formal directions specify a clarification with basic lead acetate, the use of which is, of course, irrational (*cf.* Chapter XXV). Further, the precipitated lead-reducing sugar compounds are not broken up by the addition of sodium sulphate, but the error is accentuated, since, with an excess of lead, a further precipitation of lead-reducing sugar compound occurs. Neutral lead acetate is frequently specified to be used as a clarificant followed by the removal of the excess of lead by sodium carbonate, oxalate or sulphate. The use of the first-named salt is irrational since a basic lead acetate will be formed resulting in the precipitation of reducing sugars. In addition, Meade and Harris[18] have shown that the results of the analysis are affected by the quantity of neutral lead acetate used, and also by the de-leading agent employed. They recommend, instead, that kieselguhr should be employed as the clarificant in quantity sufficient to give a clear filtrate. To this recommendation the writer would add that alumina cream or intra-precipitation of alumina is equally efficacious.

Standardization of Solution.—The quantity of copper reduced depends on the exact composition of the solution, particularly on the amount of alkali present. It also depends on the time of boiling and even on the surface area of the beakers in which the reaction takes place. Every fresh preparation of copper and alkaline tartrate should therefore be standardized under the precise routine of the analyst against a pure preparation of glucose or invert sugar. From the results of the standardization a correction may be applied to the quantity of reducing sugar, as found from the correspondence in the table employed. For example :—The analyst has found that with his preparations and routine (all intended to conform with those of Munson and Walker) 0·1140 gram invert sugar corresponds to 0·2203 gram copper, the value found by Munson and Walker being 0·2176 gram copper ; he should therefore in subsequent analyses with this stock material multiply the weight of copper found by 0·988 before using the correspondence in Munson and Walker's tables.

Direct Volumetric Methods.—The original process for the determination of reducing sugars was a volumetric one, and as such it is described in the older textbooks. It was also accepted that no correction was necessary for variation in the concentration of the reducing sugar solution, or for the presence of cane sugar. Neglect of these points tended to discredit volumetric processes. Ling,[20] however, has always supported the use of such, and in conjunction with Rendle and with Jones has arranged tables for the correction of the errors so introduced. His treatment of the question is followed below.

Solutions Required.—(*a*) 69·3 grams $CuSO_45H_2O$ in 1,000 c.c. (*b*) 142 grams caustic soda and 346 grams Rochelle salt in 1,000 c.c.

For the analysis 5 c.c. each of the above are mixed immediately before use. A solution of 1·0 gram of ferrous ammonium sulphate and 1·5 gram of ammonium sulphocyanide in 10 c.c. water and 2·5 c.c. hydrochloric acid is used as indicator. This solution is decolorized if necessary with zinc dust, and is preserved out of contact with air. The treatment with zinc dust may be repeated if necessary, but eventually it will be necessary to make up a fresh stock. In the presence of cupric salts an intense red coloration is produced. The analysis is performed by adding gradually the reducing sugar solution from a burette to the boiling Fehling solution. The reducing sugar solution should contain not less than 0·1 or more than 0·25 gram reducing sugar. The approach of the complete reduction of the cupric salt is indicated by the waning blue colour of the solution. When this is no longer distinctly blue, a drop of the unfiltered liquid is withdrawn by a glass rod, placed on a white tile, and brought in contact with the indicator. The exact end-point is thus obtained. Often it is well to make a preliminary test to obtain the approximate result as a guide and to follow this by the analysis of record.

A less convenient method of testing for the presence of unreduced copper consists in filtering off a few drops of the liquid, acidifying with acetic acid, and adding a drop of a solution of potassium ferrocyanide.

The filtration from the suspended cuprous oxide may be made by using very small filter papers folded into a cone and held in the liquid by a forceps. The clear liquid will pass into the cone whence a drop may be removed by means of a fountain pen filler. Alternatively, a Wiley[21] filter tube may be used. This consists of a glass tube, on the end of which a flange has been formed. Over the flange is stretched a piece of linen, on which is formed by suction an asbestos film. On applying suction to the tube a clear filtrate passes through which can be tested with the indicator. Knorr[21] modified the Wiley tube by sealing in a platinum disc.

Ling[20] has prepared the following table giving the relation between reducing power and concentration of the solution analysed:—

C. C. Fehling's solution used.	Invert Sugar in 100 c.c.	C. C. Fehling's solution used.	Invert Sugar in 100 c.c.
21	0·2411	32	0·1629
22	0·2311	33	0·1583
23	0·2218	34	0·1539
24	0·2132	35	0·1497
25	0·2052	36	0·1458
26	0·1980	37	0·1421
27	0·1910	38	0·1385
28	0·1846	39	0·1349
29	0·1787	40	0·1319
30	0·1731	41	0·1288
31	0·1678	42	0·1259

The error due to the presence of cane sugar may be eliminated by the use of the annexed tables, where column A gives the percentage of invert sugar on total sugars present; column B gives the percentage of invert sugar as found by experiment, using the table immediately above; column C is B — A, which gives the error (due to the presence of cane sugar) in the percentage of invert sugar so found. This table is referred to 0·2 gram of invert sugar per 100 c.c.

A.	B.	C.	A.	B.	C.
95·2	95·3	0·1	11·8	12·10	0·30
87·0	87·1	0·1	10·3	10·60	0·30
80·0	80·1	0·1	9·1	9·45	0·35
66·7	66·9	0·2	7·5	7·76	0·26
50·0	50·4	0·4	6·2	6·44	0·24
40·0	40·4	0·4	3·9	4·05	0·25
33·4	33·8	0·4	2·8	3·04	0·24
28·6	29·0	0·4	2·0	2·23	0·23
25·0	25·4	0·4	1·0	1·14	0·14
22·3	22·7	0·4	0·8	0·92	0·12
20·0	20·4	0·4	0·7	0·80	0·10
13·8	14·10	0·3			

It is evident that the greatest percentage errors occur when the cane sugar is in large excess, as in the analysis of raw sugars. The remarks already made concerning the necessity of standardization under the exact working conditions apply equally here.

Detection of Small Quantities of Reducing Sugars.—Since cane sugar itself slightly reduces Fehling's solution this material is not adapted to detect small quantities of reducing sugars in the presence of cane sugar. This may be done by means of Soldaini's solution, which, as used by the U.S. Bureau of Standards, contains 297 grams of potassium bicarbonate and 1 gram copper sulphate in 1,000 c.c. Ten grams of cane sugar give on two minutes' boiling with 50 c.c. of this solution only 1·1 mgrms. of cuprous oxide. A very delicate test for the purity of a sample of cane sugar is also afforded by this means.

Optical Assay of Fructose.—The rotation of fructose falls very rapidly with rise of temperature. Hence by observation of the optical activity at different temperatures the amount of fructose can be estimated. For each 1° Centigrade rise in temperature and for 1 gram fructose in 100 c.c. the rotation falls 0·0357° Ventzke. Assuming that the other sugars present are not affected, the amount of fructose follows directly.

Individual Estimation of Reducing Sugars in Mixtures.—Aldose sugars may be estimated in the presence of ketose sugars, and vice versa, based on their different behaviour towards the halogens, the former being readily oxidized, while the latter are but little affected. Romijn's[22] method is as below:—Ten grams of iodine and forty grams of borax are made up to 1,000 c.c. Twenty-five c.c. of this solution are mixed with the same quantity of a solution of the mixed sugars containing not more than 0·15 gram. The mixture is then kept for from 16 to 22 hours in a stoppered flask in a thermostat at 25° C. After oxidation is complete the excess of iodine remaining is determined by means of sodium thiosulphate, as in the iodometric determination of copper described already in this chapter. For two atoms of iodine, one molecule of an aldose sugar is accepted.

A more direct and convenient method of applying this reaction is that of Herzfeld and Lenart,[23] conducted as follows:—To 50 c.c. of a solution containing not more than 1 per cent. of ketose sugar, bromine is added in quantity 1 c.c. for each gram of aldose sugar present. After standing 24 hours at room temperature the excess of bromine is evaporated off, and the ketose sugar determined in the residue.

In either of these methods determination of the total sugars present gives data to calculate the undetermined sugar.

Separation of Glucose and Fructose from Sucrose.—Ammoniacal lead acetate, prepared by adding ammonia to lead acetate until the opalescence which forms just disappears, precipitates glucose and fructose from solution; the sucrose remains in solution as a soluble lead compound. The precipitated lead-sugar compounds are suspended in water through which is passed a current of carbon dioxide; the lead glucose compound is decomposed, and is removed by filtration; the lead fructose compound may then be decomposed by hydrogen sulphide. This method was used by Winter[21] in pioneer work on the nature of the sugars of the cane, but is unsuited for ordinary laboratory routine.

REFERENCES IN CHAPTER XXVI.

1. *Ann. Chem.*, 39, 360.
2. *Journal de Pharmacie* [3], 6, 601.
3. *Ann. Chem.*, 72, 106; 106, 75.
4. *Jour. Prak. Chem.* [2], 21, 227.
5. *Jour. Am. Chem. Soc.*, 1908, 28, 263.
6. *Jour. Chem. Soc.*, 1902, 71, 281.
7. *Jour. Prak. Chem.* [2], 22, 46.
8. *Jour. Am. Chem. Soc.*, 1898, 18, 751.
9. *Jour. Am. Chem. Soc.*, 1908, 28, 663.
10. *Chem. News*, 37, 181.
11. *Chem. News*, 74, 283.
12. "Handbook for Cane Sugar Manufacturers," New York, 1915.
13. *Jour. Anal. Chem.*, 2, 241.
14. "Le Rhum," Paris, 1899.
15. Chemiker Zeitung Repertorium, 21, 234.
16. *Jour. Ind. Eng. Chem.*, 1915, 7, 610.
17. "Handbook for Cane Sugar Manufacturers," New York, 1915.
18. *Jour. Ind. Eng. Chem.*, 1916, 8, 504.
19. "Handbook of Sugar Analysis," New York, 1911.
20. *Analyst*, 30, 182; 33, 160.
21. "Agricultural Analysis," New York, 1906.
22. *Zeit. Anal. Chem.*, 36, 349.
23. *Zeit. für Zucker.*, 1918, 68, 227.
24. "Agricultural Analysis," New York, 1906.

CHAPTER XXVII

The Control of the Factory

By the term " chemical control " it is not meant that the control of the factory should be given over to anyone but the manager ; but by it is implied a system of routine analysis and sampling combined with an organized scheme of technical book-keeping whereby the chemist can detect, locate, correct, and hence *control* any imperfections of the process of manufacture.

To obtain this end three postulates are demanded : correct weights, correct samples and correct analyses ; neglect of any one of these three will vitiate the control, but as shown in some sections below incorrect measurements may, in some cases, be indicated from analytical data alone and it is not the least of the duties of the chemist to check the weights against the analyses ; this is particularly the case where the cane is bought or where its weight forms a basis of payment for the labour.

In addition, the sugar factory should be regarded as a huge chemical experiment, and efforts should be made to account for every pound of sugar entering the factory. The points necessary to the control as defined above are discussed below.

Determination and Definition of Weights. *Cane.*—For the purpose of the technical control cane should be defined as everything which goes through the mill, including the dry leaves and other foreign matter. In some cases where cane is purchased it is customary to make an arbitrary deduction from the recorded weight; and executives, not without reason, may object to the appearance of two cane weights as likely to be a source of misunderstanding with an ignorant population.

No difficulty attaches to the weighing of cane, which is conducted precisely as for other material. In Cuba the transfer derricks (*Plate* XIX) are now often fitted with means for weighing the suspended load of cane before it is dumped into the cars.

Juice.—The weight of the juice is often determined on beam scales, two tanks, one filling and one emptying, being employed. These apparatus are provided with appliances which print the weight on tickets at each weighing.

In many houses automatic self-recording weighing machines, of which the Richardson[1] may be taken as an example, have been installed with very satisfactory results. The Baldwin and Hedemann machines described in the first edition have found no extended use. The Richardson weigher is shown in *Fig.* 347. It consists of a strong iron frame, supporting the equal-armed beam *A* ; to one end of the beam is hung the weighing tank or hopper, *B*, in which the liquid is carried, and to the others is suspended the counter-balance or weight box, *C*.

The quantity determined on is represented by the weights placed in the weight box, which furnish the power to actuate the scale. The supply of the liquid into the scale is from the upper hopper tank, *D*, which is fed by the feed, *E*, which forms its joint by descending on to the rubber seating, *F*. This valve is raised through the plunger, *G*, by the power of the weight in the box, *C*, and is controlled by means of the levers, *K* and *L*, which form a dead centre.

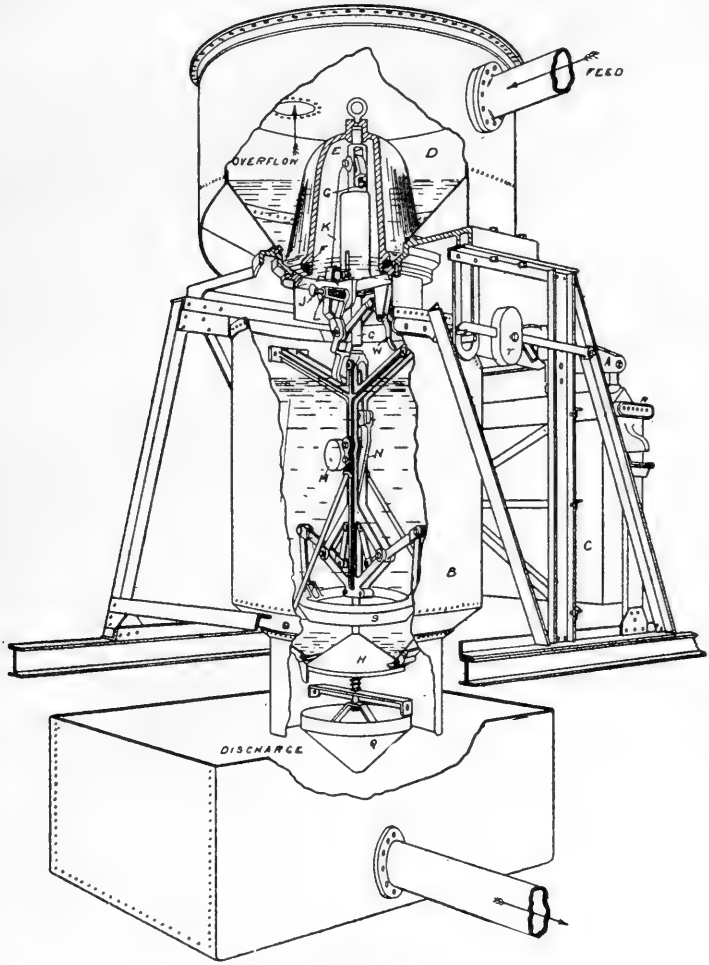

FIG. 347

A full stream of liquid enters the weighing tank, *B*, until its weight in the hopper begins to off-set the counterpoise, and in so doing releases the plunger, *G*. The valve now partially closes and only a reduced flow enters the hopper until the balance is reached. This final flow may be enlarged or reduced, by means of the screw *J*. At the balance, the beam trips the arm, *W*, and the valve completely closes. The lever, *L*, engages with the lever, *N*, breaking the lock formed by the dead centre of levers *N* and *M*, and the weight of the liquid opens the outlet valve and the contents of the tank are discharged. This discharge is controlled by the conical valve, *H*, which also has a rubber seating, and thus a joint is formed against the wall of the tank at *S*.

It will be seen that the liquid is delivered on to the tun-dish, *Q*, connected with the outlet valve, *H*, and the weight of the liquid on this tun-dish has the effect of holding the valve open until all the liquid is drained from the weighing tank. This valve returns by means of the weighted lever, *M*, when relieved of the weight of the liquid on the tun-dish, *Q*.

The sides of the tank are continued down to prevent splashing, and a mechanical counter, *R*, registers every weighing.

Another juice weigher, the Leinert Meter (*Fig.* 348) consists of two tanks of equal capacity A_1 and A_2; they are balanced on a knife-edge *B*; at *C* is a syphon pipe and at *D* is arranged an adjustable counter-weight. The juice discharges from the pipe *E* into the gutter *F*, which is tilted one way or the other by the movements of the tanks. The juice flows into one tank until the weight is just sufficient to counterpoise that at *D*, when the tank tilts into the position shown by the dotted lines and allows the juice to discharge through the syphon ; simultaneously the gutter is tilted and directs the flow of juice to the other tank. The number of fillings is registered by an automatic counter.

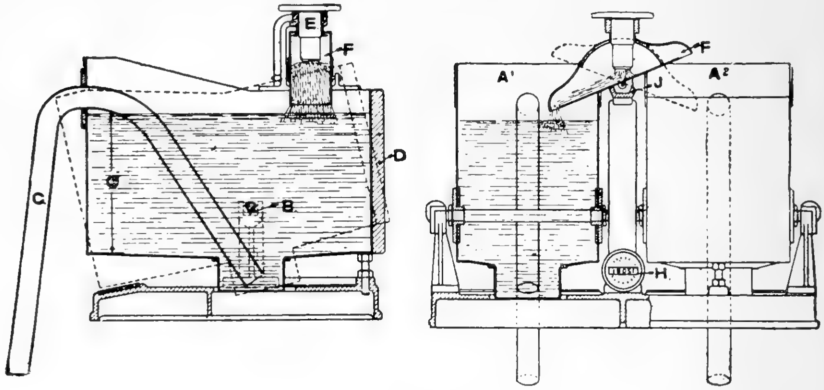

FIG. 348

In the absence of these devices resource must be had to measurement in tanks. These should be provided with an overflow, and the juice should be allowed to enter until it discharges over a wide weir, the excess being allowed to return to the pump suction. To reduce the error in measurement, tanks are sometimes built with a constricted upper portion.

It is not a hard matter to accurately gauge a tank or to fill it to a constant level, but the accurate volume measurement of juice requires attention as regards the following points :—1. Allowance must be made for the juice retained by capillary attraction at each emptying. 2. The volume of air entrained must be ascertained. This is best done by filling the tank to the overflow, and allowing to settle for some time and noting the decrease in volume. 3. The suspended solid matter must be ascertained and allowed for.

The corrections for these three sources of error can only be average corrections, as it is not feasible to make the determinations except at infrequent intervals.

The error due to the suspended matter may be eliminated by regarding it as juice and making the analyses on the whole material, but it is much more satisfactory to make the analyses on juice from which the suspended matter has been removed and to correct the recorded weight on volume of juice.

When the weight of juice is recorded from the number of tanks filled, it is well to attach to each tank a counter operated by the movement of the valves so as to check the record of the operator. A device such as that due to Horsin-Déon,[2] is also useful to demonstrate that the tanks have been properly filled and emptied, and also to serve as a counter. In this apparatus (shown diagrammatically in *Fig.* 349) a chain, *a a*, transmits motion from a float, *b*, to a drum, *c*, which revolves as the float rises and falls. A pinion, *d*, on this drum drives a rack, *e*, which carries a pencil bearing on the cylinder, *g*, rotating once in twelve hours.

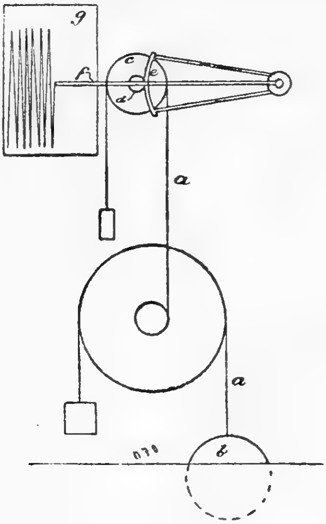

FIG. 349

Press Cake.—In cane sugar houses the weight of press cake only averages 1 per cent. of the cane, and sufficient accuracy is obtained by finding the average weight of one cake and thus obtaining the weight from the record of the presses dumped.

Raw Sugar.—This material is weighed on ordinary scales or more conveniently is filled into the bags from an automatic weighing machine, of which there are several satisfactory forms on the market. These machines also keep a tally of the number of bags filled.

Molasses.—The most satisfactory method is to weigh the molasses on beam scales, using two tanks, one filling and one emptying. If the molasses is shipped in tank cars, their contents may be determined by weight as for any other material, or less accurately the average net contents of a car may be determined. The measurement of molasses in storage tanks is very difficult owing to the depth of foam or scum which forms on the surface. The following method of determining the real level was shown the writer by Mr. H. C. Sayre. To one end of a rod of wood a weight is fixed, such that the rod will sink in molasses to a mark, the position of which on the rod is noted. This rod suspended from a cord is let down into the storage tank until it meets and floats in the molasses. The length of the string from the top of the tank is observed, whence is obtained the level of the molasses below the top of the tank. The foam, which may be a foot in depth, has a very small influence on the depth to which the weighted rod sinks.

Automatic Record of Density.—Langen's apparatus[2] is shown in *Fig.* 35c. The juice enters a containing vessel, *f*, overflows at *d* and passes away at *h*, thus maintaining a constant level. Inside the narrow central part of the vessel is a tube, *e*, to the lower end of which is attached a rubber ball, *g*. This tube is filled with water, and the height to which the water rises is dependent on the pressure on the ball, which is in turn controlled by the density of the material in the vessel *f*. The level of the water is recorded through a float, *c*, carrying a pencil, *a*, bearing on the rotating cylinder, *b*. The lower part of the tube, *g*, is formed into a spiral, so as to equalize the temperature of the water therein and the juice in the vessel *f*.

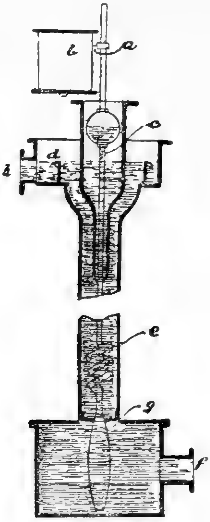

FIG. 35c

This apparatus, or others working on similar principles, are very useful to obtain a record of the density of the last mill juice and of the syrup, with the object of checking the care exercised by the operatives. They do not eliminate the necessity for taking regular samples, the results of the analysis of which give the figures entered in the records.

Sampling.—The control is vitiated by inaccurate sampling equally with inaccurate analyses. The degree of exactitude demanded depends on the purpose for which the sample is taken. General information only may be required or the sampling may form part of a process on which a calculation of recovery and losses is based. The second object requires as exact a sample as the circumstances will allow, whilst a less degree of exactitude is permissible in the first case. Examples of the first case are found in the sampling of the first mill juice, when required to give the executive an idea of the nature of the material being worked up, and in the determination of the purities of material in process made as a guide for regulating the operations of boiling.

The methods of sampling in use may be defined :—1. Intermittent from a continuously flowing material. 2. Continuously as in 1. 3. Intermittently from containers, the quantity taken being proportioned to the quantity of material in the container.

The first method should only be used when general information is required. The second method is accurate provided the sample drawn is proportionate to the rate of flow of the material. The third method is the most accurate. Various methods and devices are described below :—

If a current of liquid be allowed to impinge on a wire pointing downwards, a very small portion of the liquid will trickle down the wire, and may be collected in a container. The quantity drawn depends on the diameter of the wire. This method is very conveniently used for taking samples of juices from a roller, as when taking *first expressed juice*, or *last mill juice*. The wire is supported against the roller and the neck of the container. It is convenient to insert a funnel in the opening of the bottle so as to mimimize error from evaporation. Wire sampling may also be readily adapted to juices pumped in pipes, by allowing a jet of juice to impinge on a wire, the excess of juice flowing back to the pump suction.

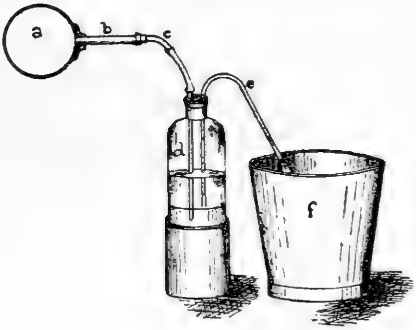

FIG. 351

Continuous samples may also be taken from pipe lines by employing the arrangement shown in *Fig.* 351, thus dispensing with the wire. Samples from gutters may be drawn by means of a toy pump.

A form of automatic sampler described by Maurice Pellet[3] is illustrated diagrammatically in *Fig.* 352. This is intended to be operated off the mill shaft through a crank, so that at each revolution the bucket dips into the juice gutter, and on its upward motion capsizes its contents into a container.

A device due to Davoll[4] is shown in *Fig.* 353. A spoon with a channel running through its haft communicates with a hollow shaft caused to rotate by belt drive from some adjacent machinery. The spoon is covered with gauze so as to keep out fibre. Other gutter samplers are built as undershot wheels, and are caused to rotate by the flow of the juice. They thus automatically proportion the sample taken to the rate of flow. A form due to

Bacher[5] is shown in *Fig.* 354. The wheel has eight paddles, two of which are provided with cups to collect the sample.

In sampling from gutters it must be remembered that mixture may not be complete, when juices of different composition, such as mill juices, are led into the same gutter; indeed, the unequal composition may sometimes be traced after the contents of the main gutter are discharged into a tank and even in the pipe line after passing through the pump.

Sampling from Containers.—The most accurate sample is obtained by taking an aliquot portion from each container of juice, syrup or molasses. If, as should be the case, all containers are of equal capacity each sample taken is of the same volume.

The continuous weighing machines on the market are arranged to take a sample when dumping their contents. Tanks on beam scales, or used for volume measurements, may easily be fitted with a pet cock through which a sample is drawn, and which is opened by the movement of the main valve, thus avoiding any forgetfulness on the part of the attendant.

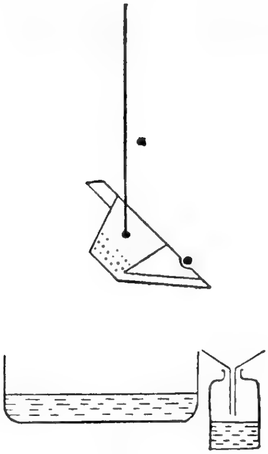

FIG. 352

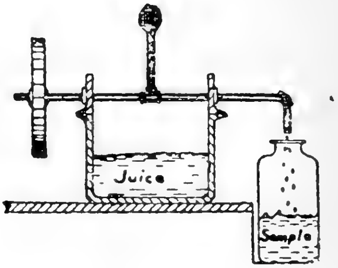

FIG. 353

Sampling of Sugars.—The sugar sample is usually taken by the weighmaster, who throws a pinch of sugar from each bag into a container. A very convenient continuous automatic sampler (*Fig.* 355) adapted to the bucket elevator was devised for the writer by Sr. Sacramento Bareto. A stout horizontal rod, *a*, was attached to the sides of the elevator. To this rod was loosely hung a hinge, *b*, with flattened end. This last was of such a length that it projected about one half-inch over the lips of the buckets *c*. The latter in their upward motion struck the swinging hinge, whereby a few crystals of sugar were " flicked " *backwards* and fell into a container, *d*, the position of which was determined by trial and error. In its motion after being struck by a bucket, the rod *b* hit against a third horizontal rod, *e*, and thus fell back on to the next bucket in succession. The container was made with a conical mouth and was provided with a sliding bottom, through which all the material collected over any period could be removed.

Sampling of Press Cake.—Unwashed cakes are of nearly equal composition throughout, but washed cakes show large variation in composition.

They must therefore be sampled in numerous places, samples being taken also from many cakes.

Sampling of Bagasse.—The sampling of bagasse, which is very important, is also the most unsatisfactory problem met with. It is of unequal composition due to the structure of the cane, to unequal distribution of added water, and to inferior crushing at the extreme ends of the rollers. To avoid error from these causes the sample should be taken from across the whole width of the rollers. The subsequent treatment depends on the method of analysis used. If small quantities—100 grams—are used in the analysis, it is imperative that a large sample of, say, a kilogram be chopped to a fine meal in some machine, such as a sausage-meat chopper. This process is troublesome and invariably entails some alteration in the composition of the material. It is much better to make the analyses on a larger quantity, say, one kilogram, and to avoid the sub-sampling. With efficient modern milling, bagasse is in a suitable condition for analysis without further division.

Bagasse taken from the earlier mills of a train for special analyses must, of course, be reduced to a fine state of division.

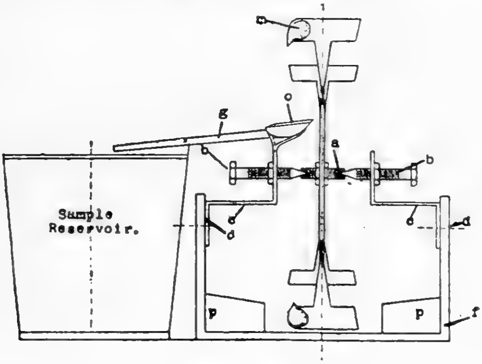

FIG. 354

The sampling of bagasse cannot be automatic, nor yet can it be safely preserved for analysis. Its composition depends on the feed of cane and on the quantity of water used. The samples should then be taken under normal working conditions and should indicate as the result of their analysis what has been the average, and not what was the composition of bagasse at any particular moment. In the system of operating cane sugar houses lack of appreciation of this point often leads to friction between the engineer and the chemist, both often forgetting that they are merely individual units in a complicated machine.

The number of samples and analyses necessary to obtain an average result reasonably accurate will depend on the variation between individual analyses, and this variation will depend on the variation in the raw material, the regularity of feed, and the general oversight exercised on the operation of milling. An hourly or at the least a two-hourly sample and analysis is generally necessary.

Sampling of Cane.—In general cane cannot be satisfactorily sampled since the variation from stalk to stalk is great, and also the composition of individual stalks varies from butt to top. When circumstances arise such that it is desirable to make an analysis of cane, a large number of stalks must be taken and the finally completed sub-sample must be representative of the length of the canes.

Division of the stalks into quarters by splitting longitudinally is easily done with a sharp heavy knife.

If cane is defined as the material delivered to the mill the accompanying trash and dry leaves are therein included. In sampling, the proportion of trash to clean cane should be determined and its analysis made separately.

In general, when the composition of the cane from a certain field is required it is better to isolate a car load on the carrier and to take samples of the juice and bagasse rather than to attempt to obtain a sample from so unsatisfactory a material.

Preservation of Samples.—The preservation of samples composited over periods as long as twenty-four hours adds materially to the capacity of the chemist, and provided the compositing is intelligently done does not detract from the value of the control. Indeed a careful analysis of a twelve-hour sample is of more value than twelve hourly analyses necessarily performed in haste.

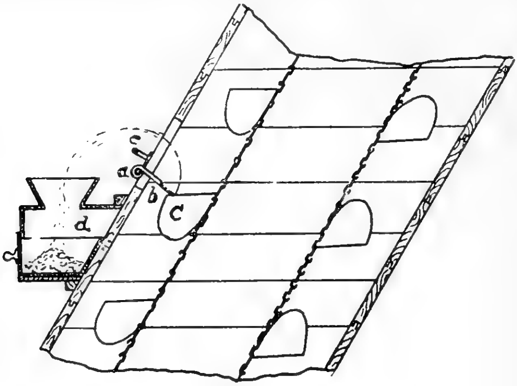

FIG. 355

The two antiseptics employed to prevent fermentation are mercuric chloride and formaldehyde. Of the former 25 mgrms. and of the latter 1 c.c. of a 40 per cent. solution per 100 c.c. of sample is used.

The above quantity of mercuric chloride causes an increase of 0·05° Brix, which correction is applied to the readings of the instrument.

In taking samples of juices it is advisable to duplicate the sample, using one for the determination of solids and one for sugar. The writer uses formaldehyde as the preservative of the first, diluted to nearly that specific gravity which experience has shown the juice will be. Correction for the presence of the preservative in the Brix determination is thus eliminated. The sugar sample is preserved with dry lead acetate, used in such quantity as is necessary to defecate the whole sample. It should be remembered that the use of antiseptics does not give an excuse for the neglect of cleanliness.

Syrup does not require any preservative provided the containers are scalded each time after use.

Bagasse may be preserved for several hours by the liberal use of formaldehyde. This material is, however, best analysed immediately after sampling.

Control of the Milling Plant.*—The control of the milling plant is concerned mainly with the determination of the quantity of juice and sugar extracted from the cane, and with an oversight on the efficiency of the operations made in this connection. The control may be positive, i.e., with the actual determination of the weights of cane, mixed juice, added water and bagasse; or inferential when the above quantities are partly determined from the results of analyses.

Before giving the methods used it is necessary to explain at some length various points connected with the constitution of the cane.

The juice in the cane is not of uniform composition and may roughly be divided into pith juice and rind juice. The pith juice is that of higher density and is expressed first. Hence the average composition of all the juice in the cane is lower than that first expressed.

In addition to juice proper, there is the watery protoplasm of the living cell and water of constitution loosely combined with the fibre which perhaps exists in a hydrated state. This constitutional water is expelled on drying at 100° C.

The writer prefers to regard for the purpose of technical control the protoplasmic and constitutional water as juice and to define as the *absolute juice* of the cane everything not fibre as determined directly or indirectly (by difference) by drying to constant weight.

As the result of analyses he found on an average that the relation, Brix of first-expressed juice $\times$ $0 \cdot 975$ = Brix of absolute juice, held. This figure refers to an extraction of about 60 per cent. on the weight of the cane.

The very able chemists in Java have taken the opposite view, and determine and record the constitutional water as distinct from the juice. The method there employed is as follows: The last mill bagasse is pressed in a hydraulic press at a pressure of about 600 lbs. per sq. in. The expressed juice is assumed to be residual juice and its percentage of sucrose is determined. Simultaneously the percentage of sucrose and of water in the bagasse is determined by drying, and, of course, the constitutional water is here included. Let the constitutional water per unit of dry fibre be w, then $r = 1 - m - mw$, where r is the residual juice and m is the fibre per unit of bagasse. If the residual juice contains s sugar and the bagasse contains b sugar, then $b = s\,(1 - m - mw)$. Solving this equation w is found, giving the quantity of constitutional water in the bagasse.

The methods used by the writer follow.

In practice a number of cases may occur, such as :—1. The weight of mixed juice alone is known. 2. The weight of cane and mixed juice is known. 3. The weight of cane, mixed juice, and added water is known.

Case 1.—The complete solution of case 1 demands a knowledge of the percentage of fibre in the cane and the application of the equation :—Cane + Water = Mixed Juice + Bagasse. Data for solution of this equation can be obtained from the ordinary routine analyses and one measurement as under. Let f be the fibre in cane, m be the fibre in bagasse, B_c, B_j, B_m

---

* The first attempt to give a system of mill control is, the writer believes, to be found in Pimienta's "Manuel el cultivo del caña de azucar," Madrid, 1881.

be the degrees Brix respectively of the absolute juice, mixed juice, and residual juice in the bagasse. Let the weight of canes be unity and the weight of the mixed juice be a; from well-known equations the weight of bagasse is $\frac{f}{m}$ and the weight of the juice in the bagasse is $\frac{f}{m}(1 - m)$.

The total weight of juice is then $a + \frac{f}{m}(1 - m)$. The solids in the total weight of juice then are

$$a\,B_j + \frac{f}{m}(1 - m)\,B_m$$

and the total solids per unit of juice are

$$\frac{a\,B_j + \frac{f}{m}(1 - m)\,B_m}{a + \frac{f}{m}(1 - m)}$$

$$= \frac{a\,B_j\,m + f\,(1 - m)\,B_m}{a\,m + f\,(1 - m)}$$

The water added per unit of original juice in the cane is then

$$\frac{\dfrac{B_c \;-\; a\,B_j\;m + f\,(1 - m)\,B_m}{a\,m + f\,(1 - m)}}{\dfrac{a\,B_j\,m + f\,(1 - m)\,B_m}{a\,m + f\,(1 - m)}}$$

$$= \frac{a\,B_c\,m + f\,B_c - f\,m\,B_c - a\,B_j\,m - f\,B_m + f\,m\,B_m}{a\,B_j\,m + f\,B_m - f\,m\,B_m}$$

Let this expression be denoted by P. The weight of original juice is $1 - f$; hence the total weight of added water is $(1 - f)\,P$. Hence from the equation

$$\text{Canes} + \text{water} = \text{mixed juice} + \text{bagasse}$$

$$1 + (1 - f)\,P = a + \frac{f}{m}\,.$$

A numerical example will show the application of this equation.

The following analytical data (expressed per unity) were found:—

B_c 0·209 (*i.e.*, 20·9 Brix); f 0·119; m 0·487; B_j 0·190; B_m 0·088; hence $\frac{f}{m} = 0{\cdot}2443$ and $1 - f = 0{\cdot}881$.

From these quantities P is found to be

$$\frac{0{\cdot}0093a + 0{\cdot}0074}{0{\cdot}0925a + 0{\cdot}0054}$$

whence

$$1 + 0{\cdot}881\left(\frac{0{\cdot}0093a + 0{\cdot}0074}{0{\cdot}0925a + 0{\cdot}0054}\right) = a + 0{\cdot}2443.$$

Solving this equation a is found to be 0·9115, or the weight of mixed juice is 91·15 per cent. on that of the cane.

The weight of bagasse is 24·43 per cent. on cane, so that, putting the weight of cane equal to unity, the weight of the added water is found from the equation :

$1 + w = 0{\cdot}9115 + 0{\cdot}2443$, whence $w = 0{\cdot}1558$, or the added water is 15·58 per cent. on cane.

By this method, if any one of the weights of cane, mixed juice, added water or bagasse be known, the others can be obtained.

The calculation of the extraction, etc., once the actual quantities have been determined, is made as shown below under Case 2.

Case 2.—This is the case which usually occurs in modern factories, namely the weight of cane and of mixed juice is known. The fibre in the cane is not determined, but is obtained by calculation from the observed fibre in bagasse.

The method of calculation is best shown by a completely worked-out example :—

Weight of cane - -	1115·3 tons.
Weight of mixed juice -	1016·6 tons or 91·15 per cent. on cane.
Absolute juice - -	20·9 Brix.
Mixed juice - - -	19·0 Brix, 16·23 per cent. sugar.
Last mill juice* - -	7·0 Brix, 5·74 per cent. sugar, 82·0 purity.
Bagasse - - - -	46·8 per cent. water, 3·69 per cent. sugar.

Then :—Soluble solids in bagasse $\frac{3{\cdot}69 \times 100}{82{\cdot}0} = 4{\cdot}50$ per cent. Fibre per cent. in bagasse $= 100 - 46{\cdot}8 - 4{\cdot}50 = 48{\cdot}7$ per cent.

Put the weight of cane equal to unity, and, since the soluble solids in the cane are equal to those in mixed juice and bagasse, it follows that

$$(1 - f) \times 0{\cdot}209 = 0{\cdot}9115 \times 0{\cdot}190 + \frac{f}{0{\cdot}487} \times 0{\cdot}045,$$

where f is the fibre per unit of cane.

Solving, f is found to be 0·119 or 11·9 per cent. on cane.

The weight of bagasse is $\frac{0{\cdot}119}{0{\cdot}487} = 0{\cdot}2443$ or 24·43 per cent. on cane.†

From the relation,

$$\begin{aligned} \text{Canes} + \text{water} &= \text{mixed juice} + \text{bagasse} \\ 1 + w &= 0{\cdot}9115 + 0{\cdot}2443 \\ w &= 0{\cdot}1558 \text{ or } 15{\cdot}58 \text{ per cent. on cane.} \end{aligned}$$

The actual quantities of material are then :—

Cane	1115·3 tons.
Mixed juice	1016·6 tons.
Bagasse 1115·3 × 0·2443	272·5 tons.
Added water 1115·3 × 0·1558	173·8 tons.
Sugar in mixed juice, 1016·6 × 0·1623 ..	165·0 tons.
Sugars in bagasse, 272·5 × 0·0369	10·1 tons.
Sugar in cane	175·1 tons.
Sugar per cent. cane	15·70

---

* In this example the last mill juice and residual juice in bagasse are taken as equal. Spencer uses back roll juice, and in Java juice is expressed from the bagasse in a hydraulic press. Alternatively, the solids in the bagasse extract obtained in the sugar determination may be found, using the pycnometer because of the extreme dilution.

† This computation assumes that all the fibre finds its way to the bagasse and neglects the small amount which passes through the strainers into the juice.

$$\frac{\text{Sugar in mixed juice} \times 100}{\text{Sugar in cane}} = \text{extraction} \quad .. \quad 94 \cdot 23$$

Dilution per cent. mixed juice $\frac{20 \cdot 9 - 19 \cdot 0 \times 100}{20 \cdot 9} = 9 \cdot 09$

Dilution per cent. normal juice $\frac{20 \cdot 9 - 19 \cdot 0 \times 100}{19 \cdot 0} = 10 \cdot 00.$

Added water in mixed juice	$1016 \cdot 6 \times 0 \cdot 0909$	$= 92 \cdot 4$ tons.
Added water in bagasse	$173 \cdot 8 - 92 \cdot 4$	$= 81 \cdot 4$ tons.
Bagasse due to cane	$272 \cdot 5 - 81 \cdot 4$	$= 191 \cdot 1$ tons.
Normal juice extracted	$1115 \cdot 3 - 191 \cdot 1$	$= 924 \cdot 2$ tons.
Normal juice per cent. cane	$\frac{924 \cdot 2 \times 100}{1115 \cdot 3}$	$= 82 \cdot 86$
Or alternatively	$91 \cdot 15 \times (1 - 0 \cdot 0909)$	$= 82 \cdot 86$

Case 3.—A number of recently erected houses have installed apparatus for automatic weighing of the added water. In this case a positive control results, and the weight of bagasse is obtained by the difference between Canes + water — mixed juice.

The weights of material once known, the calculations are made precisely as in case 2.

This method is the most rational.

Case 4.—The extraction and other results can also be obtained from analytical data only, as in the following example :—

Sucrose per cent. cane	(by analysis)	12·81
Fibre per cent. cane	,,	11·00
Sucrose per cent. bagasse	,,	4·00
Fibre per cent. bagasse	,,	44·00

Bagasse per cent. cane $\frac{11}{44} \times 100 = 25 \cdot 00$

Sucrose in bagasse per cent. cane $\frac{25 \times 4}{100} = 1 \cdot 00$

Sucrose in juice per cent. cane $12 \cdot 81 - 1 \cdot 00 = 11 \cdot 81$

Extraction $= \frac{11 \cdot 81}{12 \cdot 81} \times 100 = 92 \cdot 19$

This method was first used by Icéry.[6] Inferential methods and the direct determination of sucrose and of fibre in the cane do not now form a part of the usual routine. They have a real value, however, in checking the results obtained from direct weighing, especially when abnormal results appear and when there may be reason to suspect collusion between vendors of cane and weigh-bridge operatives.

Case 5.—If the juice of the cane were of uniform composition, the relation, Sugar per cent. cane = sugar per cent. first expressed juice $(1 - f)$ where f is the fibre per unit of cane, would hold.

Actually the substitution of $\frac{4}{3} f$ for f gives results close to the truth. This relation is of use for mental and preliminary calculations, and any large departure from it implies an error in weights, analysis or calculation. The ratio of sugar in first-expressed juice to sugar in cane should be tabulated as a part of the control records.

Interpretation of the Mill Control Analyses.—In addition to obtaining data to afford a record of the operations, the analyses should be used to maintain the standard of work at its highest efficiency. The criterion usually used to judge the efficiency of the " crushing " is the water per cent. in the bagasse. A number of years ago 50 per cent. water in bagasse was considered a standard of good work. With improved milling this figure has been gradually reduced until at the present moment certain Hawaiian mills report crop averages of less than 40 per cent. water. This reduction is largely due to the adoption of drainage grooves in both front and back rollers. Under equal conditions of milling, however, different varieties of cane will behave in a different way. Generally a lower percentage of water will be found with the harder canes, which contain both more fibre and a larger proportion of rind tissue. The water as found by drying to constant weight will also be affected by the constitutional water or water of hydration in the fibre. Possibly this is less in the more fibrous canes, which contain a higher proportion of rind tissue. The exceptionally low percentages of water reported from the Hawaiian Islands come from those mills operating almost exclusively on Yellow Caledonia cane, which is of the nature referred to. Conversely, the writer has observed that the cane known as Crystalina, White Transparent, etc., tends to afford a bagasse retentive of water.

The percentage of water is not altogether a rational basis of comparison, since the water in a given volume of juice will vary with the proportion of dissolved solids. A more rational basis is the value of the expression:—

$\frac{\text{Juice per cent. in bagasse}}{\text{Fibre per cent. in bagasse} \times \text{density of juice,}}$ which reduces to the form $\frac{1 - f}{f \times d}$, where f is the fibre and d is the density of the juice.

It is usual to make the analysis of the bagasse on the material from the last mill only. A complete control would demand the analysis from the intermediate mills since inferior work here is equally obnoxious. This control is very seldom adopted.

An oversight on the efficiency of the added water is very hard to obtain, particularly with systems of compound maceration. The efficiency of the added water will be most when the water mixes completely with the residual juice after dry crushing, and consequently a comparison of the density of the last mill juice with the computed density affords an oversight.

A number of years ago it was the custom in Java to report a " coefficient of admixture of added water," which was the value of the expression

$$\frac{\text{Sugar per cent. in last mill juice.}}{\text{Sugar per cent. in residual juice.}}$$

This expression is liable to misinterpretation since a high coefficient must necessarily be found with the use of little water, even if the admixture is zero, and, further, the presence of constitutional or hydration water in the fibre vitiates the value of the result.

A third control may be obtained by comparison of the added water per cent. cane and the dilution per cent. normal juice. As the weight of cane is greater than the weight of normal juice at first sight, it appears that the water per cent. cane would be less than dilution per cent. normal juice. Only part of the added water appears, however, in the mixed juice, and unless the admixture is very low the figure for dilution per cent. normal juice will be less than added water per cent. cane.

The Control of the Boiling House.*—The proportion of sucrose which can be obtained from that present in the juice depends on the purities of the original material, of the raw sugar, and of the waste product or molasses.

From the comparison of the amount actually obtained with that calculated from the observed purities, a control over the operations in the boiling-house follows. The fundamental formula may be obtained thus: From a material containing j sugar per unit weight of dry substance let there be removed c sugar and d non-sugar and let $(c + d)$ contain s sugar per unit weight of dry substance. The residue (molasses) is $(1 - c - d)$ and let it contain m sugar per unit weight of dry substance. Then $j = (c + d) s + (1 - c - d) m$. This equation can be transposed to the form $c + d = \frac{j - m}{s - m}$. Multiplying both sides by $\frac{s}{j}$ the following equality results :—

$$\frac{s\,(c + d)}{j} = \frac{s\,(j - m)}{j\,(s - m)}.$$

Now, $s\,(c + d)$ is the sucrose in the product (raw sugar) and j is the sucrose in the original material, so that the expression $\frac{s\,(c + d)}{j}$ is the sucrose obtained in the raw sugar per unit of sucrose in the original material. This quantity is termed the *available sucrose*, so that

$$\text{available sucrose per cent.} = \frac{s\,(j - m)}{j\,(s - m)} \times 100$$

where s, j and m are the purities of the raw sugar, the original material, and the molasses.

If sucrose or pure sugar is the product made, then s becomes unity and the formula reduces to $\frac{j - m}{j\,(l - m)}$.

This formula has been deduced above as applied to sucrose and dry substance, that is to say with regard to absolute purities. In its deduction the only postulate required is that the following self-evident relation holds :—

Dry substance in juice = dry substance in raw sugar + dry substance in molasses.

Evidently for dry substance may be substituted gravity solids provided a similar relation holds in this case, and this relation does hold when the gravity solids of the original material, of the raw sugar and the molasses are determined in *equal concentrations of non-sugar*.

The value of the expression $100 \times \frac{s\,(j - m)}{j\,(s - m)}$ is used by the writer as the available sugar, and it gives the quantity of sucrose in raw sugar of purity s,

---

* Formulæ for available sugar have been chiefly developed in Java by Winter, Geerligs, Rose, Carp, Lohman and Hazewinkel. The form usually employed is that due to Winter : Available sugar $= S \times 1.4 \times \frac{40}{P}$ where S and P are the polarization and the polarization gravity purity of the raw juice, and the available sugar is expressed as 96 test and not as sucrose. Algebraically this form is the same as that developed by the writer, who, however, was anticipated in its use by Hulla in the beet sugar industry. A very complete discussion of the work done on control formulæ in Java will be found in the Dutch Editions of Geerligs' "Cane Sugar and its Manufacture." The writer has preferred to present the matter here as he himself has developed it.

which must be removed from an original material of purity j to afford a residue (molasses) of purity m.

In the use of this formula all purities must be referred to one and the same basis, i.e., all must be either absolute, gravity or refractive purities, and, further, the formula is correct only with determinations of sucrose and not with polarizations.

As a basis of reference the writer prefers gravity purities, on the grounds of both accuracy and ease of execution. The refractometer is of lower sensibility and there are inherent sources of error in the determination of dry matter, especially in low grade cane-sugar products.

The scheme put forward by the writer for determining gravity purities for control purposes is best shown by an example. The syrup or finally purified material before the abstraction of sugar is, for example, analysed at 15 per cent. gravity solids, and is of 85 purity.

It therefore contains 2·25 per cent. non-sugar. The raw sugar contains 3 per cent. of non-sugar. A determination of the gravity solids should therefore be made at a concentration of $100 \times \frac{2 \cdot 25}{3}$ or 75 per cent. As this is at a greater concentration than is possible, the determination is made at a concentration of about 60 per cent. with the known admission of a small error.

Similarly, if the molasses is known to be of approximate composition, water 20, sugar 30 per cent., non-sugar 50 per cent., the determination is made in a concentration of about $100 \times \frac{2 \cdot 25}{50}$ or 4·5 per cent.

As an actual example of the use of this formula in control the following example may be given.

Juice contained 1023·4 tons sucrose, of which 8·4 tons was lost in the press cake, leaving 1015·0 tons in the syrup, which was of gravity purity 85·32.

The raw sugar obtained was 950·8 tons, containing 96·32 per cent. sucrose or 915·8 tons sucrose. Determined at a concentration of 60 per cent. the gravity solids in the sugar were 99·73 per cent., whence the gravity purity was 96·58. The gravity solids in the molasses determined in 4 per cent. concentration were 90·43, the sucrose per cent. was 36·44, giving a gravity purity of 40·41. The value of

$$100 \times \frac{s\,(j - m)}{j\,(s - m)} \text{ is then: } 100 \times \frac{96 \cdot 58\,(85 \cdot 32 - 40 \cdot 41)}{85 \cdot 32\,(96 \cdot 58 - 40 \cdot 41)} = 90 \cdot 53.$$

That is to say the possible recovery of sucrose as deduced from the actually observed control analyses is 90·53 per cent. of the 1015·0 tons obtained as syrup or 918·9 tons. The actual recovery was 915·8 tons, indicating a loss of 3·1 tons in the operations of boiling, crystallizing and centrifugalling. By the rational use of the s, j, m, formula as developed above a control over and an examination into the processes in the boiling house can be obtained. A divergence between the computed and observed results may be due to actual losses, to incorrect weighings or to inexact analyses.

If such a divergence should arise, it is the duty of the chemist to locate the cause and of the executive to remove it.

The sugar lost in the press cake may be regarded as available or not, depending on the point of view of the chemist. The writer prefers to regard it as available and to refer calculations to the sugar in the mixed juice, using, however, for j the value determined in the syrup as representing the finally purified material whence sugar is removed as crystals. As long as the principle of the formula is understood, the basis of reference is a matter of indifference.

The general control formula discussed in detail above may be used as a starting point to deduce other formulæ of use in control. These, which follow from simple algebraic transpositions, are collected below, and from them passage by means of constant multipliers may be made to commercial standards of reference, such as "gallons of molasses per bag."

Let s denote the purity of the final product: raw sugar, or refined sugar, in which case $s = 1$.

Let j denote the purity of the initial material:—syrup in a raw sugar house and raw sugar in a refinery.

Let m denote the purity of the by-product:—molasses in a raw sugar house and "barrel syrup" in a refinery.

Then:—

1. $s(j - m)/j(s - m)$ = sucrose in product per 1 sucrose in initial material.

2. $(j - m)/j(1 - m)$ = product = sucrose in product = solids in product per 1 sucrose in initial material, when referred to refined sugar as product.

3. $m(s - j)/j(s - m)$ = sucrose in by-product per 1 sucrose in initial material.

4. $m(1 - j)/j(1 - m)$ = sucrose in by-product per 1 sucrose in initial material, when referred to refined sugar as product.

5. $j - m/s - m$ = solids in product per 1 solids in initial material.

6. $j - m/1 - m$ = product = solids in product per 1 solids in initial material, when referred to refined sugar as product.

7. $s - j/s - m$ = solids in by-product per 1 solids in initial material.

8. $1 - j/1 - m$ = solids in by-product per 1 solids in initial material, when referred to refined sugar as product.

9. $s - j/j - m$ = solids in by-product per 1 solids in product.

10. $1 - j/j - m$ = solids in by-product per 1 sucrose in product, per 1 solids in product, per 1 product, when referred to refined sugar as product.

11. $m(s - j)/s(j - m)$ = sucrose in by-product per 1 sucrose in product.

12. $m(1 - j)/j - m$ = sucrose in by-product per 1 sucrose in product, per 1 solids in product, per 1 product when referred to refined sugar as product.

Again, if p = sucrose in initial material, especially raw sugar, then

13. $p(j - m)/j(1 - m)$ = sucrose in product = solids in product = product per 1 of initial material, referred to refined sugar as sole product.

14. Non-sugar in raw sugar/non-sugar in barrel syrup = barrel syrup per 1 raw sugar, where refined sugar is the sole product.

15. If s_1 and s_2 be purities of the product, then

$$\frac{\text{sucrose in raw sugar of } s_1 \text{ purity}}{\text{sucrose in raw sugar of } s_2 \text{ purity}} = \frac{s_1(s_2 - m)}{s_2(s_1 - m)} = \frac{s_2 - m}{s_2(1 - m)} \text{ where } s_1 = 1,$$

i.e., with reference to pure sugar.

These formulæ may be used to solve many problems, some examples being appended.

1. What are the comparative weights of raw sugar of composition (a) 96·0 per cent. sucrose, 96·3 gravity purity, and (b) 97·0 per cent. sucrose,

97·2 gravity purity, which can be obtained from a juice of 80 gravity purity with molasses of 40 gravity purity?

From formula 11 the relative quantities of sucrose in the sugars are

$$\frac{\text{sucrose at } 96\cdot 3}{\text{sucrose at } 97\cdot 2} = \frac{96\cdot 3\,(97\cdot 2-40)}{97\cdot 2\,(96\cdot 3-40)} = 1\cdot 0066$$

and the relative weights of the products are as $1\cdot 0066 \times \frac{97}{96} : 1$, or as $1\cdot 0171 : 1$.

2. What weight of molasses of 40 gravity purity and 96 gravity solids will be obtained from 100 tons of juice of 18° Brix and 84 purity, from which sugar of 97 gravity purity is extracted?

From formula 7 the answer is $18 \times \frac{97-84}{97-40} \times \frac{100}{96} = 2\cdot 28$ tons.

3. 1000 lbs. of low grade sugar of composition sucrose 90 per cent., absolute purity 92, are to be melted and produced as 96 test sugar of 96·3 per cent. sucrose and 97·3 purity. What quantity will result?

It is necessary to assume a purity for the waste molasses; let this be 45 absolute. Then from formula 1 the percentage recovery of sucrose will be $100 \times \frac{97\cdot 3\,(92-45)}{92\cdot 0\,(97\cdot 3-45)} = 95\cdot 0$, and the weight of commercial sugar will be $1000 \times \frac{90}{100} \times \frac{95}{100} \times \frac{100}{96\cdot 3} = 888$ lbs.

An additional control over the operations in the boiling house may be obtained by constructing dry substance balances, based on absolute solids, gravity solids or refractive solids. From the difference between the solids balance and the sucrose balance, a non-sugar balance is obtained, in which, however, will appear all the experimental errors. In the application of such balances to control, the following points are to be borne in mind. Mechanical loss of material before the removal of sugar from solution will result in an equal proportionate loss of sugar and non-sugar, but after sugar has been removed any loss gives a disproportionate loss of non-sugar. A means is thereby afforded of locating the position of mechanical loss.

On the other hand, any sugar lost by inversion or caramelization goes to swell the amount of non-sugars, so that an exact balance in the non-sugars may result from a compensation of errors.

The Basis of Reference for Purities.—The system of control described above and the various formulæ are equally correct whether the solids used in the purity calculations are absolute, gravity or refractive (*cf.* Chapter XXV), provided that in the last two cases the determinations are made in equal concentrations of non-sugar. The writer's opinion is that gravity purities form the most convenient basis since the specific gravity can be determined with ease and with far greater accuracy than can either the dry substance or the refractive index. Whatever basis is selected must be used throughout, as the control is vitiated if the bases are mixed, as, for instance, determining gravity purities in the juices, absolute purities in the sugar, and refractive purities in the molasses.

Control of the Sugar Boiling.—In the more recently adopted methods of sugar boiling the procedure is based on making the strikes at certain predetermined purities. This is effected by regulation of the quantity of syrup and molasses introduced into the pan. The relative proportions depend on the purity of the materials. Systematic determinations of these purities must then be made. In this way the superintendent is able to instruct the pan operator how many "feet" of syrup and of molasses is to be used in each strike. The methods of calculation to be used are those explained in Chapter XIX. The relations between contents of pans and contents of storage tanks should be worked and tabulated. The pan operator should also keep systematically a record of the work done on loose-leaf forms, which are filed daily in the laboratory.

Besides the routine determinations of Brix, Polarization and Purity, examination of the condition of the crystals is at times useful. The recovery of the separated crystals in the centrifugals is not complete, and with careless operation an excessive loss may result. The determination is most readily made by filtering the massecuite through glass wool and comparing the analysis of the crystal-free filtrate with that afforded by the factory centrifugals. A similar analysis may be made on the molasses flowing from the centrifugals. This control is of the nature of a special investigation, as the systematic routine determinations of purity afford in general a sufficient check.

Entrainment Losses.—By this term is meant especially the losses which occur by sugar being carried over mechanically, especially in the last body of the evaporator and also in the pans. Automatic continuous samples of the discharge water can be obtained by adopting the devices described for juices. After obtaining the quantity of sugar, if any, in the water, the volume of the latter is required in order to compute the sugar losses.

Per lb. of steam condensed the quantity of water w required is given by the expression $w = \frac{h - t_2 - 32}{t_2 - t_1}$ where h is the total heat of the steam and t_1 and t_2 are the initial and final temperatures of the cooling water.

The exact quantity of steam generated in the last body of multiple apparatus is not known unless definite experiments are made to determine it. It is of sufficient exactitude to take this as $\frac{1}{n}$ of the total evaporation where n is the number of bodies.

Inversion Losses.—In a well-conducted factory inversion losses should not be detectable. Even if white sugars boiled from a juice with an acid reaction be made, careful control may reduce these to a very small quantity. The method which suggests itself for their estimation is a reducing sugar balance, any increase in this material being due to inversion of cane sugar. However, if the juices have an alkaline reaction, isomeric change of the original reducing sugars to others with a lower reduction factor occurs, and if the alkalinity be pronounced actual destruction occurs. The reducing sugar balance has then a very limited application.

Number of Analyses Necessary.—The number of analyses necessary for a complete control is a matter for the judgment of the individual chemist. Much unnecessary labour may be saved by judicious sampling and compositing. Distinction should also be made between those analyses required as a guide to direct the operations and those on which the statement of yield and losses is made. For the latter to have their full value sucrose and not polarization should be returned and all statements should be based on the former.*

The writer regards the following scheme as sufficiently detailed.

First Expressed and Last Mill Juice.—Brix, polarization, in six-hourly composite sample.

Mixed Juice.—Brix, sucrose, reducing sugars in 24-hourly composite sample.

Syrup.—Brix, polarization every three hours. Gravity purity in 24-hourly composite sample.

Bagasse.—Water, polarization, every hour.

Massecuites and Molasses in Process.—Brix, polarization, purity, each strike.

Waste Molasses.—Brix, polarization, purity from each container. Periodical detailed analyses including gravity solids in appropriate dilution, sucrose, gravity purity, reducing sugars and ash, in composite sample.

Sugar.—Polarization, water per cent., every two hours. Periodical detailed analysis as for waste molasses.

Press Cake.—Polarization every six hours on composite sample.

Condensed Water.—Polarization in composite 24-hour sample.

Records.—In the technical accounting of a sugar-house, distinction should be drawn between the "weighted average" and the simple average. The former is used when the weights of the material are known and when a balance is required. The latter used when the weights of the material in question are not recorded, and where a great degree of exactitude is not demanded.

The "weighted average" is determined periodically by a reversed operation after the total of the materials over a period has been found as the sum of the daily quantities. An example will make the method to be used clear. Over a period of seven days the daily quantities of mixed juice, of sugar therein and sugar per cent. were :—

Mixed juice ..	563·4	1180·2	1263·4	1187·2	1251·4	923·5	1151·2	.. Total	7520·3
Sugar in juice	81·3	169·9	176·0	167·4	177·8	149·1	158·7	.. ,,	1080·2
Sugar per cent.	15·42	14·40	13·93	14·10	14·21	16·15	13·80		

The weighted average sugar per cent. is $\frac{1080\cdot2}{7520\cdot3} = 14\cdot39$ per cent.

The simple average of the daily determinations is 14·58.

If, for example, in the ten previous weeks there had been recorded 80192·1 tons of mixed juice and 11170·5 tons sugar therein, the totals to date will be 87712·4 and 11250·7 respectively, giving the to-date figure for sugar per cent. as $\frac{11250\cdot7}{87712\cdot4} = 12\cdot83$ per cent.

The quantities which should be worked out as actual weights daily and

---

* The very great majority of cane factories in Cuba, Java and Hawaii base their results on polarization as opposed to sucrose per cent. In Mauritius, on the other hand, for the crop of 1918, eighteen houses, out of thirty-three reporting, used the more rational basis.

carried forward as totals periodically so that they may be reduced to correct period and to-date averages are :—

Cane.—Weight of, sugar in, fibre in.

Bagasse.—Weight of, sugar in, fibre in, water in.

Mixed Juice.—Weight of, gravity solids in, sugar in, polarization in.

Added Water.—Weight of.

Syrup.—Gravity purity of.

Press Cake.—Weight of, sugar in.

Sugar.—Weight of, gravity solids in, polarization in, sugar in.

Molasses.—Weight of, gravity solids in, polarization in, sugar in.

It will be sufficient to determine the gravity solids and sugar in the sugar and molasses in a sample composited over the period.

Simple averages of the observations relating to first and last mill juice, density of syrup, purities of massecuites and process molasses, are of sufficient exactitude for obtaining the average results of a period. The to-date average may be obtained most readily by cross multiplication :—

Previous to date average, seven periods, 49·0 ; current period average 51·2 ; average to date : $\frac{7 \times 49\cdot0 + 1 \times 51\cdot2}{8} = 49\cdot3$.

Stock-takings and Balances.—Periodically* a stock and balance sheet of the quantities of material worked up, of the produce made, and of stock in process should be made. The time required to do this depends on the systematic keeping of the daily records, combined with a knowledge of the capacities of the various tanks. The stock can be taken with only a few minutes' delay of the mills, provided the foremen at the various stations are instructed in their duties, and are supplied with forms on which they enter up the material on hand when the mill is stopped. In stopping the mill all that is necessary is to leave a space on the carrier between two separate car loads and to stop the carrier when the cane corresponding to the end of the period has passed the crusher. The resulting juice is allowed to reach the measuring tanks, after which the mills are again put into operation.

After obtaining the measurements of juice, syrup, etc., the estimate of sugar obtainable is made from previous experience combined with the already made routine analyses, supplemented if necessary by special analyses of stock.

In estimating the product obtainable from the pans it is well to instruct the operators in advance to record the " feet " of syrup and molasses already taken into the pan at the time stock is taken. In measuring the material in crystallizers and mixers, it is only necessary to observe the " outage " measured from the top of the container. The corresponding contents in cubic feet can then be obtained at once from tabulated records. In houses which work at prearranged purities in the massecuites, passage can at once be made by a constant factor from cubic feet to bags of sugar and gallons of molasses or to any other desired system.

---

* In Hawaii it is customary to take stock and balance weekly. In Java a ten-day period, and in Cuba a fortnightly one is general.

A typical stock-taking, in which the estimated quantities are calculated from the *s j m* available sugar formula, follows :—

				Estimated Yield.	
	Cu. feet.	Brix.	Polarization.	Sugar bags of 325 lbs.	Molasses. (U.S. gallons).
Raw Juice	453	18·0	15·5	10	64
Defecated Juice	1,480	18·6	16·2	35	220
Scums	220	13·3	11·0	3	20
Evaporators	—	—	—	40	225
Syrup	620	62·0	54·6	129	825
Vacuum pans (Syrup) ..	1,550	—	—	322	2,062
Vacuum pans (Molasses)	310	—	—	21	1,756
Massecuite at 75 purity ..	945	—	—	138	3,193
Massecuite at 55 purity ..	8,340	—	—	890	39,919
Molasses at 45 purity ..	220	—	—	14	1,271
Total in process				1,602	49,545
Total shipped and stored ..				85,813	511,918
Total to date				87,415	561,563
Total previously				61,702	403,710
Total for period				25,713	157,853

REFERENCES IN CHAPTER XXVII.

1. *Chemical Engineer*, 1908, 9, 4.
2. "Handbook for Cane Sugar Manufacturers."
3. *Int. Sug. Jour.*, 1913, 15, 141.
4. *Jour. Ind. Eng. Chem.*, 1913, 5, 315.
5. *Int. Sug. Jour.*, 1915, 17, 432.
6. *S.C.*, 1869, 1, 27.

CHAPTER XXVIII

FERMENTATION WITH SPECIAL REFERENCE TO THE SUGAR HOUSE

THIS chapter treats principally of the fermentation of molasses and of the manufacture of rum ; incidentally, opportunity is taken to bring together some part of the scattered articles dealing with the mycology of the sugar house.

Yeast.—By this term is loosely meant any organism which has the property of fermenting sugars and producing mainly alcohol and carbon dioxide ; in this sense organisms such as the *Torulæ, Monilia,* and certain of the *Mucoraceæ* would be included, although these organisms are very distinct from that mainly composing "brewers' yeast," which consists essentially of *Saccharomyces cerevisiæ.* Systematically, production of alcohol is not an essential character of the *Saccharomyces* although the greater number of species here included do produce alcohol ; in addition some species ferment saccharose, glucose, fructose and maltose ; others glucose, fructose and maltose only ; others lactose only.

A complete list of all the known "yeasts" is given by Kohl[1] ; following him they are divided into these groups :—

I. Yeasts proper or budding yeasts. *Saccharomycetes.* These are divided into the following genera :—1. *Saccharomyces* ; 2. *Hansenia* ; 3. *Torulaspora* ; 4. *Zygosaccharomyces* ; 5. *Saccharomycodes* ; 6. *Saccharomycopsis* ; 7. *Pichia* ; 8. *Willia.*

II. Fission Yeasts, *Schizosaccharomycetes.* This includes one genus, *Schizosaccharomyces.*

III. Yeast-like fungi. These are divided into the following genera :—1. *Torula* ; 2. *Mycoderma* ; 3. *Monilia* ; 4. *Chalara* ; 5. *Oidium* ; 6. *Dematium* ; 7. *Sachsia* ; 8. *Endomyces* ; 9. *Monospora* ; 10. *Nematospora.*

In rather a loose way yeast as it appears in breweries and distilleries is classed as "top" yeast or "bottom" yeast, or otherwise as "high" and "low" yeast. These terms refer to the behaviour during fermentation, some races rising to the surface and others falling down as a sediment. The difference is not specific, since a top race can be cultivated from a bottom type, and vice versa.

In breweries and distilleries generally, the production of alcohol is due to the species *Saccharomyces cerevisiæ,* of which a number of varieties or races are known. Went and Geerligs[2] in Java examined the budding yeast there in arrack distilleries, and described it as a new species, *S. vordermanii,* although what differences distinguish it from the typical *S. cervisiæ* are very small and by some systematists would not be considered specific. Peck and Deerr[3] collected yeast from distilleries in Demerara, Trinidad, Cuba, Mauritius, Java, Natal, and Peru. All of these except that from Peru were typical budding yeasts, between which they could find no difference sufficient to form a distinction. The Peruvian yeast was a fission yeast.

In 1893, Greg[4] isolated from Jamaican distilleries a fission yeast, to which he gave the name *Schizosaccharomyces mellacei*, and in the following year Eijkmann[5] found a fission yeast *Sch. vordermanii* in Java distilleries. Material received by Peck and Deerr from a Peruvian distillery also proved to be a fission yeast, the samples sent therefrom containing no budding forms. All of these fission yeasts are very similar, if not identical with the original fission yeast, *Sch. Pombe*, obtained by Lindner[6] from Kaffir millet beer.

In *Plates* XXIX and XXX are shown the yeasts examined by Peck and Deerr, distinguished as to country of origin by the initial letter, two forms from Natal being shown. In *Plate* XXIX the specimens are drawn from material obtained from fermenting beer-wort 36 hours old. The sporulating yeasts in *Plate* XXX were obtained from gypsum blocks, except the Peruvian type, which is from an old beer-wort agar culture. The yeast marked NT is a non-sporing yeast from Natal, referred to elsewhere in this chapter. Of other yeasts the most important are those to which the fermentation of grape musts is due, and usually referred to as *S. ellipsoideus*. A conjugating yeast, *Zygosaccharomyces*, was first observed in the fermentation of apple juice by Barker[7] in England. Yeasts of the type *S. mali duclauxi*, which do not invert cane sugar, have been proposed for use in analysis by Pellet and Perrault[8]; on the economic scale the use of such ferments has been patented by McGlashan,[9] with the object of removing the glucose in order to obtain a greater yield of sugar on crystallization. Previously, however, Gayon,[10] in 1882, had suggested the use of the pin mould, *Mucor circinellioides*, for the same purpose.

Other Organisms of Special Interest. *Moulds.*—The two orders, *Perisporiaceæ* and *Mucoraceæ*, are frequent inhabitants of distilleries. The first order includes the genera *Aspergillus* and *Penicillium*, which have been specially studied in connection with grain distilleries, where an unpleasant taste is often ascribed to their presence. *Aspergillus oryzæ* is of interest as the organism to which the saccharification of rice is due in the preparation of the Japanese spirit, *saki*. The *Mucoraceæ* are also an important family unfavourably known in the distillery. Some can produce small quantities of alcohol. *Mucor oryzæ*, which is perhaps the same as *Rhizopus oryzæ* was isolated by Went and Geerligs[2] from *raggi* or Java yeast. *Mucor rouxii* isolated from "Chinese" yeast has at one time enjoyed some notoriety as an alcohol producer.

Lactic Acid Fermentation.—The importance of the bacteria which produce lactic acid in green malt in cereal distilleries is shown in a subsequent section; they occur chiefly in sour milk and in green malt; through their agency the production of lactic acid from beer wort has been proposed, and its production from molasses does not seem prima facie impossible; certain species have been noted as causing disease in beer.

Acetic Acid Fermentation.—This fermentation is economically of importance in the production of vinegar from alcohol; it may take place under the influence of certain well-defined bacteria or under that of an imperfect fungus, referred to as *Mycoderma vini*; generally it is essentially a process of oxidation, but Watts and Tempany have shown that the spontaneous souring of cane juice proceeds anærobically, the sugar forming the source of oxygen. Acetic acid has been observed by Greig Smith[11] in soured sugar, and sugar or juices left in crevices about a sugar factory undergo this fermentation and are responsible for the sour smell often observed; wash kept after the alcoholic fermentation is complete also undergoes acetic fermentation, and the writer has knowledge of cases where consignments of " molascuit " completely underwent this fermentation in transit between Demerara and London.

Butyric Acid Fermentation.—This fermentation is technically of importance in the rum industry as the flavour of fine rum is by some authorities believed to be intimately connected with its presence; in cereal distilleries it is considered most harmful, as not only does it decrease the yield of alcohol, but also forms objectionable products as butyric acid and butyl alcohol.

Viscous Fermentation.—This term has now only an ill-defined meaning, but occurs frequently in older writings on fermentation; it is used in reference to fermenting liquids becoming ropy or slimy, and was once not an uncommon phenomenon. In European distilleries this disease has been associated with certain well-defined bacterial species; in rum distilleries it is not unknown, and may often be traced to lack of cleanliness and to attempting to work with too little or no bactericide.

Gumming.—The " gumming " of cane juices has been studied by Greig Smith[12] who found that this was due to a bacillus which he described, and named *Bacillus levaniformans*; this organism is also one of several responsible for the deterioration of sugars. Lewton Brain and Deerr[13] isolated from Hawaiian sugars several forms which also produced large quantities of gum. Formerly this fermentation would have been classed as a " viscous fermentation."

Leuconostoc mesenteroides.—This organism, known as " frog spawn," has the faculty of converting sugar solutions into a gelatinous, viscous mass. It is a well-known type and has been reported from Europe and Java where it has been the cause of blocking up pipes used for the conveyance of juices. It also occurs in Hawaii and Cuba. An alkaline reaction favours its development, and therefore " liming " does not prevent, but aids, its growth. In recent literature this organism is classed as a *Streptococcus.*

Spontaneous Fermentation of Cane Juice.—Watts and Tempany[14] found that yeasts and an undetermined bacterium were concerned in this process. Alcohol was produced by the yeast, and acids by the bacterium, of which about one-third were volatile acids. The fermentation was both aerobic and anaerobic, and was inhibited by the presence of phenol, indicating that already formed enzymes do not play a very prominent part in the souring of juices.

Spontaneous Combustion of Molasses.—Crawley[15] has recorded a case of molasses on storage becoming charred, the damage being supposed to have been initially due to micro-organisms; consignments of " molascuit " have suffered a similar change on board ship.

Nitric Fermentation of Molasses.—In beet sugar factories the after-massecuites on storing sometimes show a nitric fermentation. A dense red cloud of vapour due to the presence of nitrogen dioxide is observed to hang over the massecuites ; this is ascribed to decomposition of the potassium nitrate present under the influence of bacteria, but really very little is known on the subject. The writer is unaware of any similar phenomenon being observed in cane sugar factories.

Foaming Fermentation of Massecuites.—Low grade massecuites and molasses frequently exhibit the phenomenon of suddenly producing large volumes of gases giving rise to foaming and frothing. In the cane sugar industry the matter was first studied by Geerligs[16] who believed the cause was the spontaneous decomposition of the glucinates or bodies formed by the action of lime on reducing sugars. A similar condition happens not infrequently in the beet houses, where reducing sugars are mostly absent, and Lafar[17] believes the cause in this case is that due to yeasts acting on the amides present. He also accepts the possibility of purely chemical causes such as the interaction of amides, water and reducing sugars. That organic action is possible in so high a concentration follows from the isolation by Ashby[18] (Jamaica) of a yeast active in molasses of 80° Brix, and also by von Richten[19] of a conjugating yeast from honey. Two types of bacteria have also been obtained by Gillet[20] from foaming beet massecuites, one of which was thermophilous and active at 70° C. A third cause is proposed by Kraisy[21], who suggests that dissolved carbon dioxide is responsible, and that the gas is released only when the supersaturation of the mother liquor disappears. Possibly all three causes contribute, since they are not incompatible as between each other.

Molasses as a Source of Alcohol.—Fermentation proceeds according to the equation :

$$\underset{\text{Glucose}}{C_6H_{12}O_6} = \underset{\text{Alcohol}}{2C_2H_5OH} + \underset{\text{Carbon dioxide.}}{2CO_2}$$

Following on this equation 1lb. of glucose or 0·95lb. of cane sugar should produce 0·511lb. of alcohol and 0·489lb. carbon dioxide. This yield is never obtained in practice even when the distillation losses are disregarded. Peck and Deerr[3] fermented in pure culture a number of molasses with tropical yeasts, and found that on an average 90 per cent. of the fermentable sugars were recovered in alcohol, the amount as indicated from the above equation being put equal to 100. In addition, in Hawaiian molasses they found from 4·05 per cent. to 7·32 per cent. of the sugars were unfermentable. Previously Pellet and Meunier[22] had observed in Egyptian molasses 2·40 per cent. of " glutose," and Deerr[23] had found up to 3 per cent. in Demerara molasses. The total amount of sugars in cane molasses varies from 45 per cent. to 65 per cent., so that it is impossible in the absence of an analysis to state what quantity of alcohol can be obtained from a molasses.

In the very best practice employing pure specially selected yeasts as much as 90 per cent. of the theoretical yield may be obtained, falling to 70 per cent. with the indifferent methods usually found. Referred to volume measurements and to a molasses containing 55 per cent. of sugars, superior, good and indifferent operation is represented by 2, 2·5, and 3 gallons of molasses per gallon of 95 per cent. alcohol.

Manufacture of Rum.—The manufacture of rum as a product of the fermentation of cane juice or of molasses forms an important part of the cane sugar industry in Demerara, Trinidad, Jamaica, Cuba, the Leeward

Islands, the French West Indies, Hayti, and the Argentine. Rum is also manufactured in connection with sugar mills in Peru, Mauritius, Queensland, and Natal. Molasses forms the source of the spirit "arrack" in Java, and is also utilized in British India; in these two localities, however, the manufacture of spirit is divorced from the sugar industry proper. The writer has been unable to obtain statistics of the annual production of rum, but believes the total production cannot be less than 20,000,000 gallons of spirit containing 75 per cent. of alcohol.

The fermentation processes under which rum is eventually produced are very complex, and differ largely from locality to locality. Probably the most general agents are the budding yeasts which have been described earlier in this chapter. To these is almost entirely due the rum made by the quick fermentation process, as followed in British Guiana for example, where the fermentation from start to finish only lasts forty-eight hours. The second most important agents are the fission yeasts, which do not seem to be of such general occurrence as the budding type. Thirdly, there is the influence of the non-sporing yeasts, torulæ, etc.; and finally there is the part played by bacteria, especially of the butyric-acid forming type, which appear principally in the slow fermentation processes in use in Jamaica, where the fermentation lasts as long as two weeks.

Outlines of the processes used in different localities follow.

Demerara.—A process of adventitious fermentation obtains; commercially exhausted molasses forms the initial product; the molasses are received directly from the centrifugals, storage for a few days' supply only being provided. The molasses and water—generally trench water—are usually mixed to the required density in a mechanical mixer in the basement and pumped up to the vats in the fermenting loft; in other cases the molasses is pumped up to the vat and mixed by hand with the requisite amount of water. The density of the mixture varies from 1·060 to 1·063. To the wash is added sulphuric acid, and sulphate of ammonia in the proportions of 1 gallon and 10 lbs. per 1000 gallons; the acid is added to prevent the growth of bacteria, especially the "butyric acid" form. Fermentation sets in rapidly, and is generally complete in 48 hours; the density of the fermented wash varies from 1·015 to 1·025, and is governed by the amount of sugar present, and by the action of the yeast. In some distilleries, ammonium bifluoride is used as a bactericide in place of sulphuric acid.

Bird, in Demerara, has quite recently shown that better results are obtained by transferring yeast from an actively fermenting vat to one just set up. As a means of doing this he places a cask within the vat, the contents of the former serving to "pitch" the next lot of wash in that vat.

Mauritius.—In this district only one sugar factory possesses or did possess (1901) a distillery as an annexe. The process there followed is as under:—A barrel of about 50 gallons capacity is partly filled with molasses and water of density 1·10 and allowed to ferment spontaneously; sometimes a handful of oats or rice is placed in this as a preliminary to fermentation. When attenuation is nearly complete, more molasses is added until the contents of the cask are again of density 1·10, then again allowed to ferment. This process is repeated a third time; the contents of the barrel are then distributed between three or four tanks, holding each about 500 gallons of wash of density 1·10, and, 12 hours after fermentation has started here, one of these is used to "pitch" a tank of about 8,000 gallons capacity. A few gallons are left in the pitching tanks which are again filled up with wash of density 1·1, and the process repeated until the attenuations fall off, when a fresh start is made. This process is very similar to what obtains in grain distilleries, save that the initial fermentation is adventitious.

Java.[24]—In Java and the East generally, a very different procedure is followed. In the first place a material known as Java or Chinese yeast is prepared from native formulæ. In Java, pieces of sugar cane are crushed along with certain aromatic herbs, amongst which galanga and garlic are always present, and the resulting extract made into a paste with rice meal; the paste is formed into strips, allowed to dry in the sun, and then macerated with water and lemon juice. The pulpy mass obtained after standing for three days is separated from the water and made into small balls, rolled in rice straw and allowed to dry, these balls being known as *raggi* or Java yeast. In the next step rice is boiled and spread out in a layer on plantain leaves and sprinkled over with *raggi*, then packed in earthenware pots and left to stand for two days, at the end of which period the rice is converted into a semi-liquid mass. This material is termed *tapej*, and is used to incite fermentation in molasses wash. The wash is set up at a density of 25° Brix, and afterwards the process is as usual. In this proceeding the starch in the rice is converted by means of certain micro-organisms, *Chlamydomucor oryzæ*, into sugar, and then forms a suitable habitat for the reproduction of yeasts, which are probably present in the *raggi*, but may find their way into the *tapej* from other sources. About 100 lbs. of rice are used to pitch 1,000 gallons of wash.

Jamaica.—Allan[25] gives the following outline of the process followed in making flavoured spirit :—"The wash is set up from skimmings, dunder, molasses, acid and flavour. Acid is made by fermenting rum cane juice which has been warmed in the coppers. To this juice is added dunder and perhaps a little skimmings. When fermentation is about over, the fermenting liquor is pumped on to cane trash in cisterns and here it gets sour. Into these cisterns sludge settling from the fermented wash is from time to time put. This acid when fit for use smells like sour beer. Flavour is prepared by running fermented rum cane juice into cisterns outside the fermenting house, along with cane trash and dunder that has been stored from a previous crop. Generally a proportion of liquid from what is called the 'muck hole' is also added to this cistern. The components of the 'muck hole' are the thicker portion of the dunder from the still, the lees from the retorts, and cane trash and other adventitious matter which from time to time finds its way into this receptacle. From this cistern the incipient flavouring material passes on to a second and third cistern filled with cane trash, and to which sludge from fermenting wash has been added. From the third cistern it is added to the wash. Skimmings are run from the boiling house into cisterns half filled with cane trash. This is allowed to remain four, five, or six days. When the skimmings are considered ripe, wash is set up with them. Fermentation lasts seven to eight days. The time which elapses between setting up the wash and distillation is from thirteen to fourteen days."

Process used in Grain Distilleries[24].—It is of interest to compare the above methods with those in use in cereal distilleries. The basis of manufacture is grain; this is ground to a coarse powder and a weighed amount is placed in a digester, mixed with water, and heated by steam under a pressure of two or three atmospheres for an hour or more. The liquid contents of the digester are then blown into a second vessel and cooled. As soon as the temperature falls below 63° C., a proportion of malt is added; the malt contains a ferment, diastase, which converts the starch in the grain to a sugar, maltose. After the starch has been so converted into maltose, the contents of the vat are drawn off into a fermenting vat and rapidly cooled. These vats are usually large enough to hold a whole day's work, and a distillery will have generally six fermenting vats, each of which may be of as great a capacity as 50,000 gallons. After the vat is set up it is "pitched" with yeast, and the temperature and quantity of yeast regulated with the object of obtaining the maximum yield of alcohol within the legal limit of time, *i.e.*, 72 hours. The temperature is regulated by means of water circulation through coils and maintained at 20°-25° C.; the high temperature promotes a rapid fermentation, but more fusel oils are formed than at a low one.

The preparation of the pitching yeast is as under:—A mixture of green malt and water is warmed to about 70° C., kept at this temperature for about two hours to allow the starch to be converted to maltose and *soured*. Green malt contains enormous numbers of bacteria, amongst which are the lactic and butyric acid organisms. Butyric acid is a virulent yeast poison, and its development would injure the yeast. Yet these organisms cannot be killed by raising the temperature, as this would also destroy the action of the diastase. The butyric acid bacteria are, however, themselves susceptible to slight degrees of acidity. In order to destroy them without injuring the yeast the temperature is arranged so that the lactic acid bacteria can develop; the optimum temperature of the lactic acid bacteria is from 47 to 50° C., that of the butyric acid organisms about 40° C. The mash is hence kept at a temperature of about 50° C., whereby the lactic acid bacteria thrive and the formation of lactic acid effectually prevents the development of the butyric acid organisms. When the acid present reaches 1·0 to 1·1 per cent., the process is stopped by raising the temperature to 70° C.; the mash is re-cooled to 20° C. and pitched with yeast, in the proportion of about 1lb. to 10 gallons; after about 14-16 hours the yeast has so far developed as to be used in the main process, a portion being kept for the next sour mash.

This process left much to chance, and has been developed on other lines, although the object in view has always been the same. In the first place the presence of lactic acid bacteria is adventitious, and, although their presence is very general, it not infrequently happened that the process miscarried by reason of their absence. To get over this difficulty the infection of the sour mash was carried out by inoculation with pure cultures of lactic acid bacteria, and now more recently a new procedure known as the hydrofluoric acid process has been largely introduced.

It was sought for a long time to find some substance that would be antiseptic to the butyric acid bacteria and yet harmless to the development of yeast, and after many bodies had been tried Effront, in 1890, introduced the use of alkaline fluorides. The initial proposition was to add from 4 to 8 grms. of hydrofluoric acid per hectolitre (say from $\frac{1}{20}$ to $\frac{1}{10}$ lb. per 100 gallons) of the yeast mash which had been treated in the way described above, this quantity being found sufficient to prevent the development of injurious organisms.

Pure Yeast Processes.—In the processes described above the fermentation takes place under the influence of such yeast moulds and bacteria as adventitiously find their way into the wash. By a pure yeast process, is meant one in which the fermentation is conducted under aseptic conditions, and under the influence of one selected yeast. Such a process in its entirety demands the sterilization of the raw material, and the continued cultivation in special apparatus, designed to prevent contamination of the selected yeast. The sterilization of the wash is not absolutely essential to the process, as sufficient of the pure yeast may be added to ensure that the fermentation takes place mainly through it. Pure yeast processes are in very limited use in the cane sugar industry, and the only plants of which the writer has knowledge are in the state of Morelos, in Mexico. The process here followed as described by Fournier[26] includes a Magné apparatus for the aseptic continuous production of selected yeast, two intermediate vats of 25,000 litres capacity each, the contents of which are " pitched " with the pure yeast, and which in turn serve to supply yeast to the main fermentation vats of which there are forty-five of capacity 17,000 litres each. In such a process by means of selection, yeasts capable of completely fermenting wash at a density of 1·1 can be used and yields 95 per cent. of the maximum possible can be obtained.

Rum.—Rum has been legally defined in Great Britain as a spirit distilled from fermented products of the sugar cane in a country where the sugar cane is grown. This definition is quite inapplicable to the United States, where rum has been manufactured in New England from molasses since the old colonial days. It is also almost self-evident that the location of manufacture need have nothing to do with the composition and flavour of the product.

Originally the term rum was confined to a spirit distilled from juice, the term *tafia* being used for spirits of molasses origin. The term in the French West Indies is *guildive,* a corruption of " kill devil."

Rum consists mainly of alcohol and water, the other bodies present being caramel (in coloured rums), fatty acids, ethereal salts, aldehydes, higher alcohols and essential oils. The acids known to be present are formic, acetic, butyric and capric, both free and as ethereal salts.

Miller[27] has given the following analyses of Demerara rums :—

ANALYSES OF DEMERARA COLOURED RUMS.

	PERCENTAGE BY VOLUME.								
	1	2	3	4	5	6	7	8	9
Alcohol	80.84	80.40	79.19	77.39	76.68	80.56	77.32	80.98	80.19
Higher alcohols, " fusel oil " ..	0.8956	0.7975	0.4557	0.5903	0.6942	0.6463	0.3218	0.9243	0.1581
Ethylic formate	0.0088	0.0153	0.0405	0.0373	0.0233	0.0396	0.0180	0.0373	0.0350
Ethylic acetate	0.0243	0.0231	0.1258	0.1563	0.0645	0.1018	0.0542	0.0636	0.1229
Ethylic butyrate	0.0101	0.0334	0.0499	0.0510	0.0115	0.0302	0.0165	0.0186	0.0661
Total acid (as acetic)	0.148	0.190	0.196	0.160	0.196	0.160	0.166	0.131	0.136
Volatile acid (as acetic)	(.018)	(.018)	(.060)	(.024)	(.030)	(.016)	(.024)	(.021)	(.015)
Total solids (colour)	1.040	1.210	1.750	1.510	1.420	0.990	0.1750	0.680	0.1050
Potash (K_2O) absorbed by colour	(.1974)	(.2128)	(.2820)	(.2162)	(.2068)	(.1795)	(.2256)	(.1955)	(.1974)

Micko[28] has given, amongst others, the following analyses of genuine and fictitious Jamaica rums of ascertained purity.

Specific Gravity at 15.5° C.	Alcohol per cent. by Volume	Volatile Acids as Acetic. Grms. per 100 c.c.	Ethers as Ethyl Acetate. Grms. per 100 c.c.	Flavouring Constituent of genuine Jamaica Rum.	Flavouring Bodies foreign to Jamaica Rum.	Coal Tar Dye Stuff.	Taste and Aroma.	Remarks.
0·9440	44·9	0·0036	0·070	None	Vanillin	No	Of artificial rum	Artificial rum
0·9452	44·2	0·0280	0·071	,,	,,	,,	,, ...	,,
0·9361	49·3	0·0024	0·040	,,	,,	Yes	,, ...	,,
0·9448	44·5	0·0110	0·058	Trace	,,	No	,, ..	{ Artificial rum with small proportion of Jamaica rum
0·9100	61·7	0·0110	0·090	,,	Cassia oil	,,	,, ...	,, ,, ,,
0·9347	50·0	0·0051	0·018	Present	Vanillin	,,	Not of pure Jamaica rum	Artificial rum with Jamaica rum
0·8793	74·4	0·0390	0·378	Large amount	No	,,	Of Jamaica rum	Pure Jamaica rum
0·8813	73·7	0·0430	0·799	,,	,,	,,	,, ...	,,
0·8886	71·2	0·0642	0·396	,,	,,	,,	,, ...	,,

Geerligs[29] has given the following analyses, amongst others, of Batavian rums (arrack).

	Alcohol per cent. by Volume.	PARTS PER MILLION.					
		Free Acid.	Ethers	Aldehydes.	Furfurol.	Higher Alcohols.	Total Non-Alcohols.
Batavia arak prima	60·7	1500	2464	594	50	250	4858
,, ,, K.W.T.	59·4	1500	2464	352	50	500	4866
,, ,, B.A.M.	58·4	1310	2552	298	90	440	4690
Rum from British India X.	50·2	50	440	132	0	850	1604
,, ,, XX. ..	52·5	24	610	88	0	800	1484
,, ,, XXX. ..	52·4	50	528	132	0	750	1372

In consequence of an abortive prosecution for selling Demerara rum as Jamaica rum, Harrison[30] examined the ethereal salt content of Demerara rums, finding a variation from 23·7 to 141·6, with a mean of 64·7 parts per 100,000; pot still rums contained on an average 69·9, and continuous still rums 44·9 parts per 100,000 of alcohol.

In Jamaica rums, classed as "common clean," Cousins[31] found 200-300, in high-class ordinary rums 300-400, and in the best flavoured 1100 and upwards parts of ethereal salts per 100,000 of alcohol.

The Flavour of Rum.—It is generally held that the peculiar fruity flavour of rum is due to the presence of ethyl ethers, particularly the butyrate and caprylate. It has been shown by Cousins that these ethers, particularly the latter, are present in very minute quantity, and that the ether predominantly present is the acetate. Compared with the other ethers the acetate and butyrate, particularly the former, are volatile, and these serve as a means whereby the heavier ethers are conveyed to the organ of smell. According to the same writer the accentuation of the flavour on dilution is due to the presence of water decreasing the volatility of the acetate, thereby masking its somewhat pungent yet pleasant smell. These remarks apply exclusively to Jamaica rums, and not to Demerara rums of less ether content; in these Harrison[30] claims that the peculiarities are in some part due to the caramel compounds used in colouring.

In addition there is present in Jamaica rum a peculiar and diagnostic substance, the presence of which was first demonstrated by Greg, who isolated the substance by means of petroleum ether from dunder and from spirit. He likens the flavour of this body to that emitted by new leather. This body has also been isolated by Micko[22] by means of fractional distillation. He states that it is neither an aldehyde nor a ketone, but has the properties of an ethereal oil, though it may be allied to the terpenes.

The sharp, unpleasant taste of newly distilled rum may be due to fatty acids, which in the process of ageing react with the alcohol, forming ethereal salts, an equilibrium between fatty acid, alcohol, ethereal salt and water being finally formed. The agents contributing to the causes of the flavour of rum are very complex. Greg, who was the first to study the matter, succeeded in isolating a yeast that in its fermentation produced a specific flavour. On the other hand, Allan[25] attributed the flavour of Jamaica rums to the presence of fission yeasts and of butyric acid bacteria, of which he isolated one, and of *Bacillus mesentericus*, to which he attributed the presence of higher alcohols, especially butyl alcohol. Allan's work refers to Jamaica rums, in the preparation of which bacterial action is prominent in the "muck hole" (*v. supra*), but in the quick process followed in Demerara bacterial action is prevented as far as possible by the use of bactericides.

Ashby,[32] also working in Jamaica, was inclined to lay less stress on bacterial action and more on the type of fermentation, observing that a slow fermentation with a top fission yeast accentuated the production of ethers and of a flavoured rum.

Very recent experiments by Kayser[33] indicate marked differences in the composition, and hence the flavour, of rum following on the scheme of fermentation. With a spontaneous uncontrolled fermentation he found high ethers, higher volatile acids, and low higher alcohols. With sterilized material and pure fission yeasts, the ethers and volatile acids decreased, the higher alcohols increasing. Spontaneous fermentation in the presence of sulphuric acid gave intermediate results. Finally there is the question of the production of fruit ethers by certain non-sporing yeasts or torulæ. One such was isolated by Peck and Deerr[3] from material fron Natal, and produced 7,558 parts of ethereal salts per 100,000 of alcohol, both acetate and butyrate being present. Similar organisms with a production of fruit ethers twice as great have been obtained by Ashby[32] from Jamaica distilleries.

Possibly all the causes mentioned above contribute to the flavour of rum, the predominance of one cause fixing the type peculiar to a locality.

Independent of biological causes, the type of still used has an influence, the product of pot stills retaining more of the non-alcohols than happens with continuous stills, and finally the addition of caramel and its method of preparation also contribute to the flavour of rum.

Faulty Rum.—By faulty rum is meant a spirit which on dilution with water becomes cloudy and throws down a deposit. The causes to which this behaviour are attributed are :—The presence of caramels soluble in strong and insoluble in dilute spirit ; the presence of higher fatty acids, due to careless distillation, which are precipitated on dilution ; the presence of terpenes extracted by the spirit from the casks ; the presence of a micro-organism capable of life and reproduction in 75 per cent. alcohol. This last view was brought forward by V. H. and L. Y. Veley,[34] who named the organism they isolated *Coleothrix methystes* and stated that it is extremely resistant to ordinary methods of destruction, survives desiccation, is air borne, and both aerobic and anaerobic. In certain of their publications the organism is described as multiplying and living actively in 75 per cent. rum, and in other places as merely surviving in spirit. The whole of the results of V. H. and L. Y. Veley were challenged by Scard and Harrison, [35] who were unable to obtain any of the effects noticed by the Veleys. They found, however, in Demerara rums remains of organisms similar to the one in question, and were of opinion that faultiness in rum was due to the first three causes mentioned above.

When rum samples have been kept in an imperfectly sealed bottle so that the spirit is free to evaporate, the writer has frequently noticed a mucilaginous growth appear ; this on microscopic examination is found to be of a fungous character, and to be similar to that described by Veley as the cause of faulty rum. The writer has never observed it in strong spirit, but, when the fungus growth was transferred *en masse* to 75 per cent. alcohol, the organisms were not killed, but cultures could be obtained for over a year. The growth did not increase in size, but remained suspended in the rum, which remained quite clear. When a drop of the original weak spirit containing the fungus was inoculated into sound clear rum, no change whatever took place. The writer thinks it quite possible that masses of the organism, to the existence of which he gives credence, have found their way into casks and puncheons, and have thus been present and alive on arrival in England, but he does not think they can be called the cause of faulty rum.

Caramel.—Caramel is the name given to the decomposition products obtained on heating sugar or glucose to temperatures in the neighbourhood of 180° C. ; a black brittle amorphous highly hygroscopic substance, which reduces Fehling's solution, results. This body is certainly a mixture of various bodies, of the chemistry of which nothing is known. The product when prepared from pure sugar or glucose, and when care is taken to prevent local superheating, is highly soluble in water and to a less degree in spirit. There are present, however, especially when the decomposition is pushed to extremes, caramels which are insoluble in water and soluble in spirit. If these are present in any notable quantity, a perfectly clear 40 O.P. spirit may give a deposit when mixed with water, and to the presence of these caramels is to be attributed one of the causes of faultiness in rum.

Caramel produced by burning sugar is completely soluble in water in the presence of alkalies, and the solution at the same time assumes a much darker colour ; but caramels dissolved in spirit are precipitated by alkalies, the solution becoming less coloured. In the presence of alkalies the flavour of the caramel undergoes a complete change, and at the same time gives off a peculiar odour.

A process which was long kept a trade secret and used, it has been stated, especially for colouring rums, consisted in burning sugar in the presence of alkalies ; the proportions used were 60 parts of sugar and 2 parts of sodium carbonate or 1·5 parts of caustic soda. This process is referred to as Asrymusry's, and is used to some extent in the West Indies.

When caramel is used for colouring rum, two points have to be considered. The caramel should reduce the strength of the spirit as little as possible, and should give to the rum a sugary flavour. To obtain the latter effect the molasses or sugar syrup should not be burned too far, but in this case the amount of caramel required to give the necessary depth of colour so much increases the density of the spirit that there is a large apparent loss.

The usual method of preparing caramel is as under :—Into an iron pot of about 200 gallons capacity, usually an old iron tayche, are introduced 40 to 50 gallons of molasses, with or without the addition of alkalies as indicated above. Water is added to reduce the density to about 1·25. A brick oven is built under the pot, and a brisk fire kept up. The molasses or syrup must be kept in continual motion, preferably by a mechanical stirrer. The sugar solution rapidly darkens, and in from 60 to 90 minutes is quite black. The usual test to show if the caramel is sufficiently burned is to remove a portion on a stick, and, after cooling, to break the caramel with the finger ; it should be quite brittle. Another test is to drop a globule of the burnt caramel into water, the floating of the globule being an indication that the caramel is sufficiently burned. When either of these tests obtains, the caramel will colour rum reasonably well, but to obtain a low *obscuration* the burning must be continued longer. When the point at which the caramel is sufficiently burned is decided, the fire is drawn and sufficient water added to permit of easy carriage to the rum store.

The higher the temperature at which the caramel is burned, the less is required to produce the necessary depth of colour, and the apparent loss of strength is lower ; the after-treatment in the rum store has also an effect on the caramel. If the crude colour be repeatedly treated with strong 60 O.P. to 70 O.P. spirit, the coloured solution allowed to settle, and the clear colour drawn off, eventually a colour is obtained which gives a barely appreciable obscuration. This process is too lengthy to carry out in practice, but a colour burnt as described above and treated once, bulk for bulk, with white rum from the still, will give a fully coloured rum with apparent strength, as shown by the Sikes hydrometer, only from one or two proof degrees less than the actual.

In the West Indies first molasses are generally used to prepare caramel, and one gallon of molasses should afford material sufficient to colour from 50 to 60 gallons of rum.

It is sometimes found that a coloured rum obstinately refuses to settle. In this case the addition of about four ounces of alum per 1,000 gallons of spirit will often be found beneficial.

The essential part of the analysis of a caramel is the determination of its colour intensity. This determination is usually made by dissolving a fixed weight of caramel in a definite volume of water or spirit and comparing the colour with a standard prepared under similar conditions, or the colour may be matched in terms of a Lovibond or other tintometer, which forms a very useful instrument for this purpose. Determinations of the ash and reducing power are also sometimes made ; a molasses caramel, of course, carries more ash than a sugar caramel. The copper oxide reducing power varies considerably and generally lies between 0·3 and 1·6, that of glucose being unity ; for highly burnt molasses caramel the writer has found a reducing power of about 0·5. Connected inversely with the colour intensity is the obscuration, caramel of high colour intensity giving a low obscuration.

In the preparation of caramels for beers, porters and vinegars, a very well-known trade formula is the addition of salts of ammonia, chiefly the carbonate and chloride, in quantities of one to two lbs. per 100 lbs. of sugar or glucose. Their addition is said to increase the colour intensity and to modify the harsh bitter taste.

Various patented caramels are on the market ; these consist essentially of organic dyes and are not caramels at all. They colour rum with a low obscuration, but spoil the flavour and do not keep their colour permanently. Their use is not to be recommended.

The process described above gives a caramel suited for rums of about 40 O.P. For rums of proof strength the caramelization must not be carried so far.

Ehrlich[36] by heating sugar *in vacuo* at 200° C. extracting the product with methyl alcohol, and extracting the residue with water, has obtained a homogeneous body of composition $C_{12}H_{18}O_9$ (*i.e.*, sucrose *minus* 2 H_2O) ; this body is stated to be the most powerful caramel colour yet made.

The Distillery.—A distillery consists of four separate buildings ; the liquor loft containing the fermenting vats, the still-house in which are placed the stills, the engine-house and the rum store. To these in certain cases may be added the boiler-house.

The choice of position for the liquor loft is not unimportant, as experience has shown that the fermentation is affected by apparently trivial causes. It should be raised on pillars about fifteen feet from the ground, be well lighted and ventilated and open on all sides to the breeze, and should not be shadowed by the other factory buildings. In certain factories the rum store is built underneath the liquor loft. This is inadvisable as, besides running the risk of wash leaking into the rum vats, circulation of air underneath the liquor loft is prevented. The pipes and gutters used in connection with the distillery should be so placed and arranged that they present easy access for cleaning. Underground pipes, and concrete or brickwork tanks in connection with a distillery are unhesitatingly to be condemned.

The number of vats and their capacity depends on the amount of molasses available and the time required for fermentation. Every 100 gallons of molasses will give between 600 and 700 gallons of wash at a density of 1·060,

PLATE XXVIII

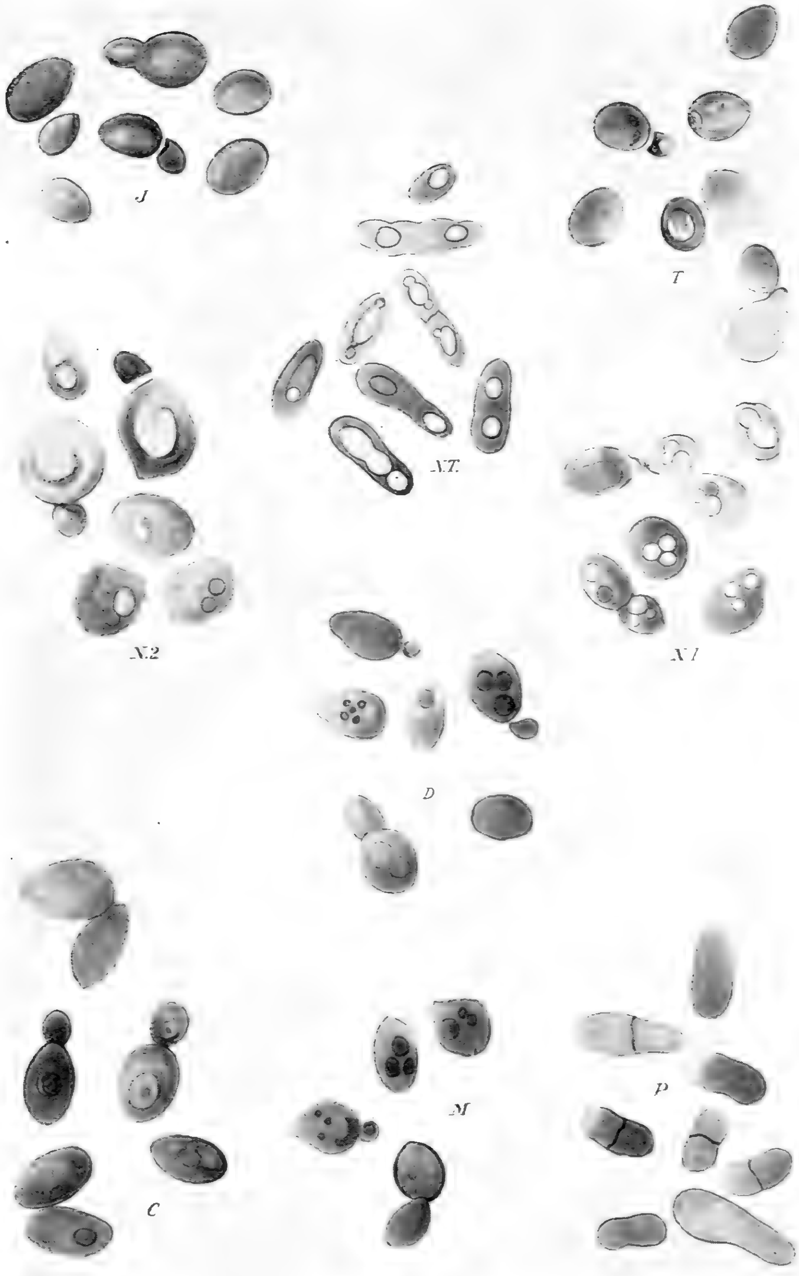

APPEARANCE OF YEASTS FROM VARIOUS COUNTRIES WHERE MOLASSES IS FERMENTED.

J — JAVA YEAST.
NT — MONILIA FROM NATAL
T — TRINIDAD YEAST.
N 2 — NATAL YEAST.
D — DEMERARA YEAST
N 1 — NATAL YEAST.
C — CUBAN YEAST.
M — MAURITIUS YEAST.
P — PERU YEAST.

PLATE XXIX.

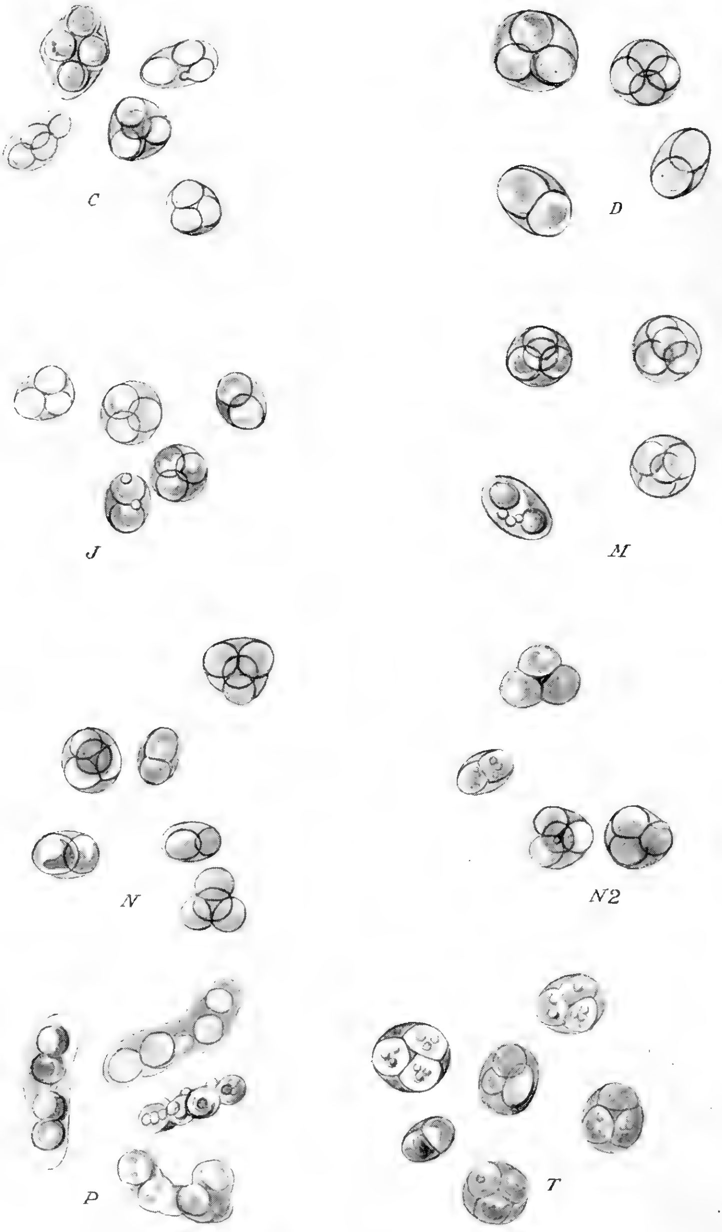

SPORULATION OF YEASTS FROM VARIOUS COUNTRIES WHERE MOLASSES IS FERMENTED.

C — CUBAN YEAST.
D — DEMERARA YEAST.
J — JAVA YEAST.
M — MAURITIUS YEAST.
N — NATAL YEAST NO. 1.
N 2 — NATAL YEAST NO. 2.
P — PERU YEAST.
T — TRINIDAD YEAST.

and from every 100 tons of sugar made, from 3,000 to 9,000 gallons of molasses result, dependent, of course, on the composition of the juice. Given 100 tons of sugar per week, from 3,000 to 9,000 gallons of wash per day will be produced, and, allowing the fermentation to take 48 hours, the capacity of the vats must be double this. In practice it would be advisable to allow at least 25 per cent. in excess of the calculated figure. Of course, in many places a longer period than 48 hours is taken in the fermentation, and then a corresponding increase in the capacity of the vats must be allowed. A usual size of vat found in the West Indies is one holding about 3,000 gallons. In Scotch and English distilleries much larger vats are the rule and a capacity of 50,000 gallons is not unusual. The initial cost of erecting a few large vats, and a loft to contain them and cost of upkeep, is less than for a larger number of small vats, and it is a general opinion that a slightly better fermentation is obtained in larger vats.

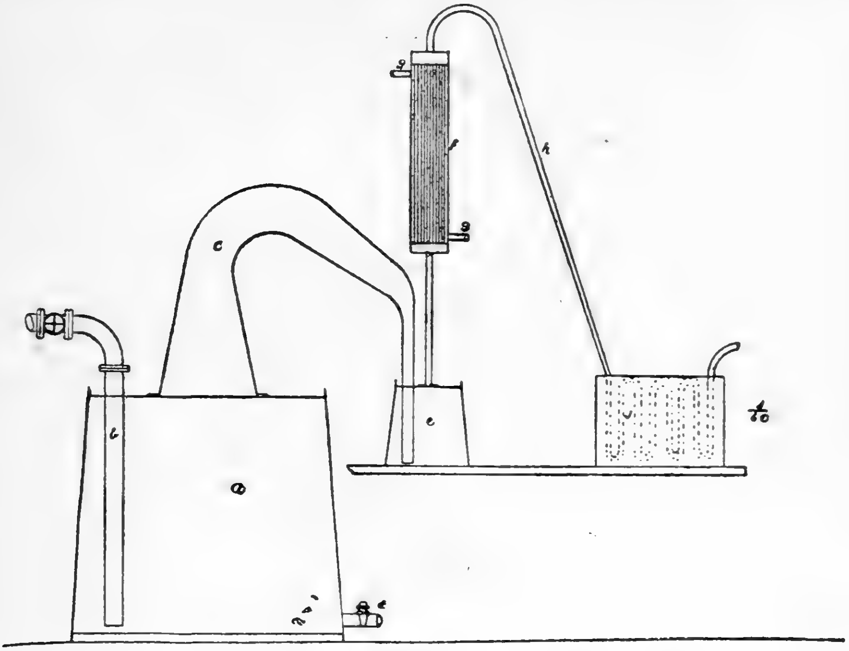

Fig. 356

Antiseptics should find a larger use in distilleries, especially when shut down; all gutters, pipes, &c., should be carefully cleansed. The antiseptic most in use in Europe now is a 1 per cent. solution of ammonium fluoride.

Forms of Stills.—The stills used may be divided into two classes, direct fired and steam stills; or again into intermittent or continuous stills. Direct fired stills are very uncommon and only a few remain in unprogressive districts. They are constructed of copper and set in brickwork over a furnace with a circular flue. Besides being expensive as regards first cost, they are very uneconomical in fuel consumption.

Vat Still.—A sectional view of the general form of steam-heated vat still is given in *Fig.* 356; *a* is a wooden vat of capacity varying with the amount of wash to be treated; at *d* is shown the pipe through which the lees are discharged when the wash is exhausted; steam from the boilers is admitted by the pipe *b*, which reaches nearly to the bottom of the vat; on the top of the vat is placed the copper goose-neck *c*, which is continued into a smaller vat *e* known as the retort; in the latter are placed the low wines resulting from the previous operation. At *f* is shown the rectifier; this consists of an upright cylindrical copper vessel, in which are fixed a large number of tubes of small diameter. Water is admitted to the rectifier by the pipe *g* and circulates on the outside of these tubes. From the rectifier a pipe passes to the tank *j*, in which a supply of cold water circulates, and after passing in a serpentine fashion emerges at *l* and passes on to the spirit receiver. The watery mixture of vapour and alcohol proceeds from the still to the retort, where it takes up any alcohol still remaining in the low wines, and passes upwards through the rectifier, where a large portion of the water and other bodies of high boiling point condenses and falls back into the retort. The vapour of alcohol leaves the retort at a temperature of from 180° F. to 190° F. and is condensed in the serpentine in the tank *j*.

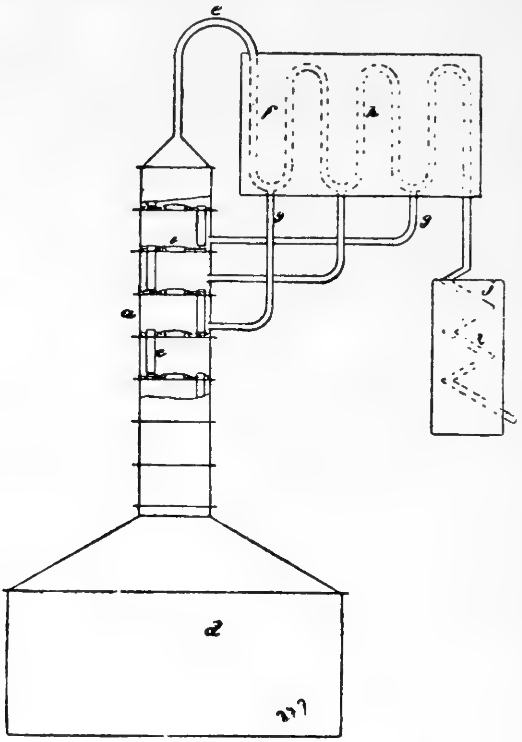

FIG. 357

Column Still.—In *Fig.* 357 is given a semi-diagrammatic view of what is known as the *French column*, which is practically identical with Coupier's still. The column or dephlegmator *a* is divided into chambers by plates, each of which has a central opening covered by a dome, *b*. A small overflow pipe, *c*, passes from each plate to the next. The vapours from the boiler *d* pass upwards through the central openings through the layer of liquid on each plate, and thence through the overflow pipes back to the boiler. The vapours of high boiling point are condensed in the U-pipes *h* in the condenser *f*, passing back to the still by the pipes *g*. A coil, *i*, is shown in the tank, *j*, where the spirit is cooled.

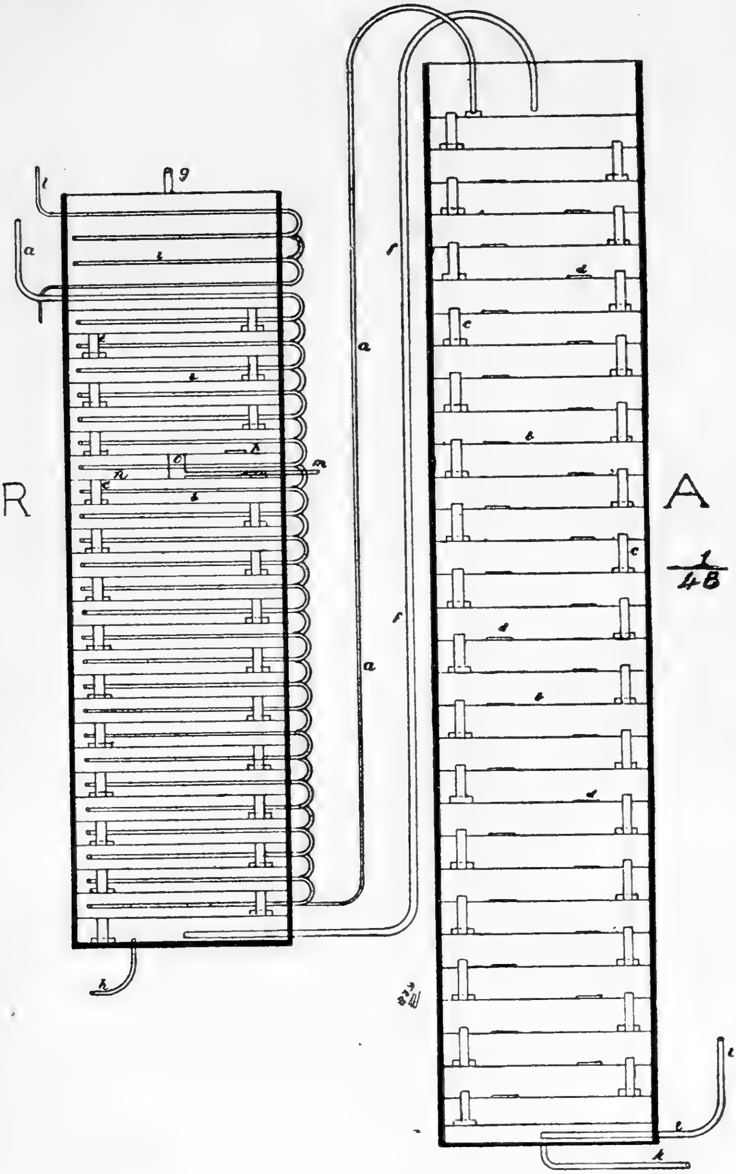

Fig. 358

Coffey Continuous Still.—The coffey still, *Fig.* 358, consists of two parts, the analyser *A*, and the rectifier *R*; either column is built up of rectangular wooden frames resting one on top of the other, and the whole kept in position by a number of vertical stay rods. The analyser is divided into a number of chambers formed by the interposition of copper plates *b b*, perforated with a large number of holes about $\frac{1}{8}$-in. diameter ; in each plate is a disc valve, *d d*, consisting of a disc of copper about 3 in. diameter and opening upwards ; from each plate passes down a dip pipe, *c c*, about 9 in. long and 3 in. diameter ; the top of the dip pipe projects about 1 in. above the copper plate and dips into a cup which rests on the next lower plate. The rectifier is divided into chambers by similar diaphragms, save that the five upper chambers are separated from the others by an unperforated copper sheet *n n*, which has a large opening at *p* and a receptacle at *o* from which leads out a pipe *m* ; the opening at *p* has a collar 1 in. high ; the five upper plates have no valves or perforations, their object being to cause vapour to pass in a serpentine direction.

The method of working is as follows :—Wash is pumped into an overhead tank (not shown) and flows down the pipe *a a* ; this pipe is continuous, and emerging at the bottom of the rectifier is carried to the top of the analyser and discharges the wash over the top diaphragm ; the wash flows down the analyser in a zigzag direction passing down the dip pipes, which are placed as shown at alternate ends of the plates ; reaching the bottom of the analyser the wash discharges through the pipe *k*. Steam is admitted at a pressure of from 5 to 10 lbs. per square inch by the pipe *ii*, and passes upwards through the perforations in the plates. The cups in which the dip pipes stand are always full of wash, and acting as a seal prevent passage of vapour except through the perforations. The dip pipes projecting an inch above the diaphragms always keep this depth of liquid on the plates ; in case the vapour is unable to pass quickly enough through the perforations, it can obtain a passage through the valves *d d*. The steam in its passage through the wash deprives it of its alcohol, and a mixed vapour of alcohol, water and other volatile constituents passes out of the analyser by the pipe *f f*, and is led into the bottom of the rectifier. As the vapour meets the cold wash in the continuous pipe *a a*, it is condensed and at the same time heats the wash. The water vapour and bodies of high boiling point, as well as some alcohol, are condensed in the lower part of the still and fall down to the bottom, and are continually taken away by the pipe *h*, called the " hot feints pipe." The alcohol in great part condenses in the upper five chambers, and, falling down on the plate *n n*, is received in the receptacle *o* and taken away by the pipe *m* ; this pipe leads to a refrigerator and thence to the spirit store. A pipe *g* leads from the top of the rectifier and takes away the uncondensed vapour. This pipe likewise passes through a refrigerator, and the condensed vapours are collected and form the cold feints. At *l l* is a water coil, by means of which the amount of cold feints allowed to be formed can be regulated. The hot feints can either be allowed to mix with the wash or they may be passed through a condenser and pumped to the top of the analyser. The cold feints are collected separately, and, when sufficient have accumulated, they are mixed with the wash and redistilled ; if pumped directly to the analyser, owing to their low boiling point they volatilize with explosive violence.

The wash leaves the rectifier at a temperature of about 190° F. and is completely exhausted of spirit in its passage down the diaphragms of the analyser, the expelled vapour passing through the pipe *f f* being at a temperature of about 205° F. to 210° F. The upper coil in the pipe *a a* is at the temperature of the wash, and the temperature increases regularly on passing down. The strength of spirit condensed in the upper five chambers can be regulated by controlling the temperature. A high temperature causes alcohol to pass off in the cold feint pipes, and at the same time diminishes the condensation of watery vapour so that a weak spirit results; a low temperature makes alcohol condense below the spirit plate, increasing the quantity of hot feints. To obtain the best results the temperature of condensed spirit in the spirit plate should lie between 176° F. and 180° F. The control of the still is effected either by regulating the supply of wash or of steam; valves are fitted, of course, on both the wash pipe and steam pipe. To enable the attendant to know the strength of the spirit at any moment, a small pipe passing through a supplementary refrigerator takes a sample of spirit from the spirit plate, and conducts it to a locked test case; if spirit 45 O.P. is required, three glass bubbles, one which floats in 42 O.P., one in 45 O.P. and one in 48 O.P., are placed in the vessel receiving the spirit; as soon as all three bubbles rise the attendant knows his spirit is too weak, and when two sink that it is too strong. As a further guide thermometers are placed in various parts of the still; one in the spirit plate, a second at about the twelfth coil of the rectifier, and a third on the pipe carrying wash to the analyser.

To use these stills to greatest advantage, they must be worked with as little sudden change as possible. Control is effected by regulating either the flow of wash or steam. In forms of stills where the wash is pumped to an overhead tank, opening or shutting a cock or valve (the latter preferably) controls the flow of wash. In other forms where the wash is pumped directly through the coil a cock is fitted on the pipe, convenient to the distiller, and connected to a second pipe leading back to the vessel from which the pump draws. The amount of steam is regulated by a valve; in general, it is preferable to control working by the flow of wash.

The spirit should not be run from the spirit plate too rapidly; if the latter be emptied by opening the cock too much, a weak spirit collects and the cock must be closed until the test bubbles show that spirit of the correct strength is forming. The supply of wash and steam must be adjusted to each other; too little steam imperfectly exhausts the wash and an excess results in too much watery vapour passing over, giving a weak spirit. To allow the distiller to see that the wash is properly exhausted, vapour from the lees is collected in a separator, and carried through the supplementary refrigerator to a test glass in which are bubbles floating in water and spirit 98 U.P.; should either of these sink it is certain that the wash is imperfectly exhausted. The advantage of these stills over the common type of vat still lies chiefly in their economy of steam.

Approximate dimensions of a continuous still of the Coffey type working up 1,000 gallons of wash per hour are here given, the letters referring to sketch in *Fig.* 358. Rectifier R, total height 24 ft. × 8 ft. × 3 ft.; analyser A, total height 42 ft. × 8 ft. × 3 ft.; number of chambers in both analyser and rectifier, 27; total length of pipe *a a*—contained in analyser—416 ft.; diameter of pipe, 2 in.; total surface of pipe 217 square feet; size of dip pipes *c* in rectifier 4 in. × 9 in., and in analyser 13 in. × 3 in.; diameter of valves *d*, 5 in.; diameter of vapour pipe *f*, 7 in.; diameter of steam pipe *i*, 4 in.; diameter of hot feints pipes *h*, 1½ in.; diameter of spirit pipe, 1½ in.; diameter of cold feints pipe, 6 in. The still described is one constituted of wood and is of rectangular section; other forms of stills are built throughout of copper and are often of circular section, the wash pipe being worm-shaped instead of straight with U-bends as in this case.

The advantage of the Coffey still lies in its economy of steam, the incoming wash being heated by the alcohol and water vapour distilled and in turn condensing this vapour ; actually it consumes only about one-third the steam required for a discontinuous process. Its disadvantages lie in its removing from the product bodies of boiling point remote from that of alcohol and to which the flavour of rum is due ; attempts have been made to restrict the term *rum* to the product of discontinuous stills.

Separation of Products of Fermentation.—When using the old forms of vat stills, the bodies that have low boiling point pass over in the first runnings, while the fatty acids and higher alcohols having higher boiling points pass over in the last runnings. Between these comes over the main body of the distillate ; the first and last runnings are collected separately and are called *feints* or *low wines.* In the continuous type of still the bodies of low boiling point are found in the cold feints, the fatty acids in the hot feints ; a complete separation is, however, impossible, and all these bodies are found in greater or less degree in the spirit, dependent on the care exercised by the distiller. The boiling points of the principal constituents of rum are in degrees Fahrenheit :—Alcohol 173° ; formic acid 216° ; acetic acid 246° ; butyric acid 315° ; capric acid 380° ; ethyl formate 129° ; ethyl acetate 168° ; ethyl butyrate 241° ; ethyl caprate 322° ; formaldehyde 70°. It will be seen that ethyl acetate and alcohol have nearly the same boiling point, so that any ethyl acetate present in the fermented wash will be totally recovered with the rum. The other bodies will be present in less quantity as their boiling point is more remote from that of alcohol. The majority of these bodies are, however, volatile in steam and hence are present in the distillate in larger quantity than would be supposed from their boiling point.

Control of the Distillery.—In all molasses distilleries with which the writer is acquainted, the control is limited to the revenue requirements supplemented occasionally by determinations of the reducing sugars in the wash. A record is in this last case obtained of the amount of sugar required to produce a unit of alcohol. This forms a very imperfect control and a tentative more complete scheme is outlined below.

Fermentation Control.—A composite sample of the wash is collected and in this sample are determined the reducing sugars after inversion expressed as invert sugar ; a second sample is fermented with a pure culture of an approved distillery yeast and in the fermented sample are determined the alcohol and the unfermentable sugars ; deducting the unfermentable sugars from those originally found gives the amount of fermentable sugars originally present ; this quantity should be used in calculating the yield of alcohol per pound of sugar.

The results obtained on the small scale with pure culture should be compared with those found on the commercial scale, and the deficiency indicates the loss of alcohol due to imperfections in the process of fermentation.

Distillation Control.—The alcohol in the wash as it enters the still forms the basis of this control ; it should be determined in a composite sample, and compared with the amount actually recovered ; the balance is to be found in the feints, in the lees, and in leaks from the still. The alcohol in these residues should also be determined and all expressed as percentages of that originally present. Finally an account of the alcohol produced per unit of total sugar and of fermentable sugar should be made out.

Alcoholometry.—Unfortunately in Great Britain and her colonies alcohol is measured in "proof"; a more annoying system could barely have been devised. By proof is meant one which at 62° F. weighs $\frac{12}{13}$ of an equal bulk of water; 40 over proof (O.P.) means that 100 volumes of the spirit contain as much alcohol as 140 volumes of proof; 40 under (U.P.) means that 140 volumes of the spirit contain as much alcohol as 100 volumes of proof. Absolute alcohol is 75·25 O.P., so that to convert volumes of proof spirit to alcohol it is necessary to divide by 1·7525 and vice versa. Proof spirit contains 49·3 per cent. by weight or 57·06 per cent. by volume of alcohol. In France, and also in Germany, the Gay-Lussac scale is used; this is the most rational one and gives directly the percentage of alcohol by volume. The Cartier scale is an empirical one, 43 being absolute alcohol and 22 being proof spirit. The Beck scale is also an empirical one, 43·9 being absolute alcohol and 14·8 being proof spirit. In the U.S.A. the Gendar scale is used; 200 is absolute alcohol, 100 is U.S. proof (*i.e.*, 50 per cent. by volume) and 0 is water.

The bubbles used in distilleries as a guide in the test case are based on the Cartier scale; they are numbered from 16 to 30; bubble 25 corresponds to 25 Cartier, but bubble 26 corresponds to 24 Cartier, &c.

COMPARISON OF THE DIFFERENT ALCOHOL SCALES.

Alcohol per cent. by Volume.	Proof.	Cartier.	Beck.	Gendar.	Bubble
100	75 25 O.P.	45	44	200	—
95	66·4	40	38	190	—
90	57·6	36·5	34	180	—
85	48 9	33·5	30	170	17
80	40·1	31	27	160	19
75	31·4	29	24	150	21
70	22·7	27	21	140	23
65	13·9	25	18	130	25
60	5·2	23	16	120	27
55	3·6 U.P.	21	14	110	29
50	12·4	20	12	100	30
45	21·1	19	10	90	—
40	29·9	17·5	9	80	—
35	38·7	16·5	7	70	—
30	47·5	15·5	6	60	—
25	56·1	15	5	50	—
20	64·9	14	4	40	—
15	73·7	13·5	3	30	—
10	82·5	13	2	20	—
5	91·2	12	1	10	—
0	0	11	0	0	—

Obscuration.—The obscuration of a spirit is the difference between the actual proof strength and the apparent proof strength as determined by an immersion alcoholometer. Thus spirit showing 40·0 over proof by the alcoholometer, and of actual strength 43·1 over proof is said to have an obscuration of 3·1. In some cases, however, the obscuration is expressed on the proof spirit, so that for the example quoted the obscuration is $\frac{3\cdot1}{1\cdot431} = 2\cdot17$ per cent. on proof spirit.

The easiest method of determining the obscuration is as under:—

1. Take the apparent strength by the hydrometer.

2. Evaporate about 200 c.c. of the spirit on a water-bath till all the alcohol is removed; take up the residue with water, and make up to the volume of the spirit taken.

3. Take the density of the solution of the residue either by the pycnometer or by a hydrometer graduated to read 0·0001. It is absolutely essential that all measurements be made at the temperature at which the instruments are graduated.

Calculation: Let x = specific gravity of the obscured spirit, and d = specific gravity of the residue dissolved in water; then $\frac{x}{d}$ = original gravity of the spirit.

Example: Coloured rum stands 21·0 Sikes at 84° F., indicating an apparent strength of 40·6 O.P.; the specific gravity corresponding to 21 Sikes is 0·8512. The density of the residue dissolved in water is 1·0040. Then original gravity of spirit $= \frac{0 \cdot 8512}{1 \cdot 0040} = 0 \cdot 8478$. The Sikes indication corresponding to a specific gravity of 0·8478 is 19·0, indicating a spirit 42·8 O.P.; hence the obscuration is 42·8 — 40·6 = 2·2.

An older formula for use with this method gives $x - d$ = the original gravity of the spirit.

A second method, and one generally used for beers and wines, consists of distilling over the material until all the alcohol has passed over, making the distillate up to the original volume and finding the strength of the distillate by an immersion alcoholometer, which in the absence of solids in solution gives exact results. With strong spirit, such as rum, it is extremely difficult, if not impossible, to prevent loss by evaporation and the first-mentioned method is preferable.

In the following table are calculated obscurations from the observed density of the residue dissolved in water, the standards adopted for the calculation being a spirit of strength 40·6 O.P. (= 21·0° Sikes) at a temperature of 84° F.; the table is applicable to spirits varying considerably from these adopted standards.

OBSCURATION TABLE.

Density of Dissolved Residue.	Obscuration.	Density of Dissolved Residue.	Obscuration.	Density of Dissolved Residue.	Obscuration.
1·0000	0·0	1·0028	1·5	1·0054	2·9
1·0002	0·2	1·0030	1·7	1·0056	3·0
1·0004	0·3	1·0032	1·8	1·0058	3·1
1·0006	0·4	1·0034	1·9	1·0060	3·1
1·0008	0·5	1·0036	2·0	1·0062	3·2
1·0010	0·6	1·0038	2·1	1·0064	3·3
1·0012	0·7	1·0040	2·2	1·0066	3·4
1·0014	0·8	1·0042	2·3	1·0068	3·5
1·0016	0·9	1·0044	2·4	1·0070	3·6
1·0018	1·0	1·0046	2·5	1·0072	3·7
1·0020	1·1	1·0048	2·6	1·0074	3·7
1·0022	1·2	1·0050	2·7	1·0076	3·8
1·0024	1·3	1·0052	2·8	1·0078	3·9
1·0026	1·4				

Analyses.—The analyses necessary to a distillery control are indicated briefly below.

Density of Wash.—The methods given for juices in Chapter XXIV are applicable.

Attenuation.—The attenuation is the difference between the initial and final density, water being put equal to 1000 ; thus wash initially at 1063 and finally at 1015 is said to have attenuated 48 degrees. For each degree of attenuation it is customary to assume the presence of so much proof spirit ; a common allowance is 1 per cent. of proof spirit for every 5 degrees of attenuation. As the result of a series of laboratory fermentations with pure cultures, the writer found 1·17 per cent. of proof spirit for every 5 degrees of attenuation. This method is not meant as an accurate determination of percentage of proof spirit, but as a guide to revenue and customs authorities.

Sugars.—There is no necessity to determine the cane sugars as such ; the sugars should be determined after inversion following the methods given in Chapter XXV ; as the sugars will be mainly glucose and fructose in approximately equal proportions, it will be best to calculate them as invert sugar.

Alcohol in Wash and Lees.—Take a definite quantity of material, neutralize with caustic soda, and distil until about 90 per cent. of the original volume has been collected ; make up with water to original volume and determine the density of the distillate by means of a pycnometer, whence the percentage of alcohol is obtained by reference to the table given below. As lees usually contains very little alcohol it will be well to take a large quantity, say 1000 c.c., distil over 500 c.c., re-distil the distillate until 250 c.c. have come over, and finally determine the density of this portion. Otherwise the density of the distillate differs so little from unity that a large percentage error may arise.

Alternatively, the fractionating still heads of large cooling area, listed by dealers in apparatus, may be used to obtain the alcohol concentrated in a distillate of small volume.

A form of pycnometer which is of great use in the tropics is that due to Boot, where the bottle containing the liquid is enclosed in a second, the space between them being evacuated. Liquids may be cooled down to 15° C. and kept in the inner bottle without change of temperature and without the condensation of water on the outside of the bottle.

The table connecting density and percentage of alcohol given below is referred to water at 60° F. In the tropics materials must be cooled down nearly to this temperature ; in the absence of ice this is best done by dissolving in water a salt such as thiosulphate of soda. Small variations from the standard temperature may be corrected by the use of the expression :—

$$D = D^1 + d\left(0{\cdot}00014 + \frac{1 - D^1}{150}\right)$$

where D is the required density, D^1 the observed density, d the difference in temperature in centigrade degrees between 15·5° C. (60° F.) and that at which the observation was made.

A table connecting degree Sikes and specific gravity at 84° F. for strong spirits is added as being useful in certain districts.

TABLE CONNECTING SPECIFIC GRAVITY AND PERCENTAGE OF ALCOHOL.

Specific Gravity.	Alcohol per cent. by Volume	Specific Gravity.	Alcohol per cent. by Volume	Specific Gravity.	Alcohol per cent. by Volume	Specific Gravity.	Alcohol per cent. by Volume	Specific Gravity	Alcohol per cent. by Volume	Specific Gravity.	Alcohol per cent. by Volume	Specific Gravity.	Alcohol per cent. by Volume	Specific Gravity.	Alcohol per cent. by Volume	Specific Gravity.	Alcohol per cent. by Volume
1 00000	0·00	0·99854	0·95	0·99716	1·90	0·99579	2·85	0 99445	3·80	0·99315	4·75	0·99189	5·70	0·99065	6·65	0·99947	7·60
0·99992	0 05	849	1·00	708	1·95	571	2·90	438	3·85	308	4·80	182	5·75	059	6·70	940	7·65
984	0·10	842	1·05	701	2·00	564	2·95	431	3·90	301	4·85	175	5·80	053	6·75	934	7·70
976	0·15	834	1·10	694	2·05	557	3·00	424	3·95	295	4·90	169	5·85	047	6·80	938	7·75
968	0·20	827	1·15	687	2·10	550	3·05	417	4 00	288	4·95	162	5·90	040	6·85	922	7·80
961	0·25	819	1·20	679	2·15	543	3·10	410	4·05	281	5·00	156	5·95	034	6·90	916	7·85
953	0·30	812	1·25	672	2·20	536	3·15	403	4·10	274	5·05	149	6·00	027	6·95	909	7·90
945	0·35	805	1·30	665	2·25	529	3·20	397	4·15	268	5·10	143	6·05	021	7·00	903	7·95
937	0·40	797	1·35	658	2·30	523	3·25	390	4·20	261	5·15	136	6·10	015	7·05	897	8·00
930	0·45	790	1·40	651	2·35	515	3·30	383	4·25	255	5·20	130	6·15	009	7·10	891	8·05
920	0·50	782	1·45	643	2·40	508	3·35	376	4·30	248	5·25	123	6·20	002	7·15	885	8·10
915	0·55	775	1·50	636	2·45	501	3·40	369	4·35	241	5·30	117	6·25	0·98996	7·20	879	8·15
907	0·60	768	1·55	629	2·50	494	3·45	363	4·40	235	5·35	111	6·30	990	7·25	873	8·20
900	0·65	760	1·60	622	2·55	487	3·50	356	4·45	228	5·40	104	6·35	984	7·30	867	8·25
892	0 70	753	1·65	615	2·60	480	3·55	349	4·50	222	5·45	098	6·40	978	7·35	861	8·30
884	0·75	745	1·70	607	2·65	473	3·60	342	4·55	215	5·50	091	6·45	971	7·40	855	8·35
877	0·80	738	1·75	600	2·70	466	3·65	335	4·60	208	5·55	085	6·50	965	7·45	849	8·40
869	0·85	731	1 80	593	2·75	459	3·70	329	4·65	202	5·60	079	6·55	959	7·50	843	8·45
861	0·90	723	1·85	586	2·80	452	3 75	322	4·70	195	5 65	072	6·60	953	7·55	837	8·50

Degree Sikes and Specific Gravity at 84° F.

	0	0·1	0·2	0·3	0·4	0·5	0·6	0·7	0·8	0·9
17	0·8443	0·8444	0·8446	0·8448	0·8450	0·8452	0·8453	0·8455	0·8457	0·8458
18	0·8460	0·8462	0·8464	0·8465	0·8467	0·8469	0·8471	0·8472	0·8474	0·8476
19	0·8478	0·8479	0·8481	0·8483	0·8485	0·8487	0·8488	0·8490	0·8492	0·8493
20	0·8495	0·8497	0·8498	0·8500	0·8502	0·8503	0·8505	0·8507	0·8509	0·8510
21	0·8512	0·8514	0·8516	0·8518	0·8519	0·8521	0·8523	0·8524	0·8526	0·8528
22	0·8530	0·8531	0·8533	0·8535	0·8537	0·8538	0·8540	0·8542	0·8544	0·8546

REFERENCES IN CHAPTER XXVIII.

1. " Die Hefepilze."
2. Java *Arch.*, 1894, 2, 529.
3. H.S.P.A. Ex. Sta., Agric. Ser., Bull. 28.
4. Bull. Botanical Dept., Jamaica, May, Aug., Sept., 1895; Jan., 1896.
5. *Centralblatt für Bakteriologie*, 1894, 16, 97.
6. *Wochenschrift für Brauerie*, 1887, 44.
7. Proc. Roy. Soc., 1901, 68, 345.
8. *Bull. Assoc. Chim. Suc.*, 23, 639.
9. U.K. patent 23779 of 1902.
10. *Journal de Pharmacie*, 1882, 5, 441.
11. Proc. Linnean Soc., New South Wales, 26, 284.
12. Proc. Linnean Soc., New South Wales, 26, 589.
13. H.S.P.A. Ex. Sta., Path. Ser., Bull. 9.
14. *W. Ind. Bull.*, 1905, 6, 386.
15. *Jour. Am. Chem. Soc.*, 19, 238.
16. *Int. Sug. Jour.*, 1893, 25, 407.
17. *Oe.-Ungar. Zeit. Zuck.*, 1913, 42, 737.
18. *Int. Sug. Jour.*, 1910, 11, 302.
19. *Centralblatt für Mycologie*, 1912, 13, 67.
20. *Int. Sug. Jour.*, 1917, 19, 264.
21. *Deut. Zuck. Ind.*, 1914, 39, 197.
22. *Int Sug. Jour.*, 1904, 6, 223.
23. *Int. Sug. Jour.*, 1906, 8, 154.
24. After Lafar's " Technical Mycology."
25. *W. Ind. Bull.*, 1906, 7, 141.
26. *La. Planter*, 1915, 55, 27.
27. *Timehri*, 1890, 90.
28. *Int. Sug. Jour.*, 1910, 12, 225; 410; 446.
29. Java *Arch.*, 1905, 13, 379.

30. B. Guiana Official Gazette, Oct. 19, 1904.
31. *W. Ind. Bull.*, 1906, 7, 120.
32. *Int. Sug. Jour.*, 1910, 12, 302.
33. *C.R.*, 114, 161.
34. "The Micro-organism of Faulty Rum."
35. *S.C.*, 1898, 30, 410; *Int. Sug. Jour.*, 1899, 1, 124.
36. International Congress of Applied Chemistry, 1909.

APPENDIX

Page

BIBLIOGRAPHY 591

HISTORICAL CONSPECTUS 605

ADDENDUM TO CHAPTER IV 611

MUNSON AND WALKER'S TABLES 613

BIBLIOGRAPHY

The list given here is believed to be reasonably complete. Many of the citations have merely historical value, but are nevertheless of great interest. Journal articles are not quoted here, but this lacuna is filled by the references given in the body of the text.

Older Monographs.

Chelus de. Histoire naturelle du Cacao et du Sucre. Paris, 1719

Comyns. An Essay on Sugar. London, 1753.

Crump, G. Dissertatio Medica inauguralis de Arundine Saccharifera ejusdemque Usu. Leyden, 1729.

Deussing, A. De Manna et Saccharo. Groningen, 1659.

Hoermann-Plaz. De Saccharo. Leipzig, 1763.

Hoffmann-Malderjan. Dissertatio de Saccharo. Halle, 1701.

Mendel, P. Dissertatio de Saccharo. Frankfurt, 1761.

Rohr-Pré. Dissertatio de Arundine Saccharina. Erfurt, 1719.

Sala, A. Saccharologia. Rostock, 1637.

Salmasius, C. De Saccharo et Manna Commentarius. Paris, 1663.
The work of a great scholar, and the source of many later dissertations.

Zahlheimb. Dissertatio de Saccharo. Vienna, 1772.

Works on Flora and Natural Histories.

Acosta. Historia natural y moral de las Indias. Sevilla, 1590.

Aublet, F. Histoire des Plantes de la Guyane Française. London, 1775.
Gives a detailed account of manufacturing processes and also deals with Mauritius.

Blount, T. P. A Natural History containing many not common Observations, extracted out of the Best Modern Writers. London, 1693.

Bouton, L. Espèces des Cannes cultivées à Maurice. Port Louis, 1863.

Cuzent, G. Les Iles de Société Tahiti. Rochefort, 1860.

Desbassyns, C. Sur les Cannes cultivées a l'Ile de Réunion. Réunion, 1848.

Hasskarl. Plantæ rariores Javanicæ. Berlin, 1856.

Hernandez, F. Rerum medicarum Novæ Hispaniæ Thesaurus. Mexico, 1615.
An authority for the pre-Columbian existence of the cane in the New World.

Hughes, Griffith. The Natural History of Barbados. London, 1752.

Hughes, W. The American Physician; or a Treatise on the Roots, Plants, growing in the English Plantations in America. London, 1672.

LOUREIRO. Flora Cochinchinensis. Ulyssepone, 1792.
The authority for the Elephant cane.

MIQUEL. Flora Indiæ Bataviæ. Amsterdam, 1855.

NEES, ESENBECK VON. Agrostologia. Stuttgart, 1829.
Contains a history of early sugar cane planting in Brazil.

PHILLIPS, H. A. The History of Cultivated Vegetables. London, 1822.

PISO, G. De Arboribus in Brasilia. Leyden, 1658.

ROCHEFORT, DE H. Histoire naturelle et moral des Antilles de l'Amerique. Rotterdam, 1665.

ROXBURGH, H. Flora Indica. London, 1832.
The authority for the Chinese cane.

RUMPF, G. Herbarium Amboinense. Leyden, 1741-53.
A great classical pre-Linnean work on botany. It gives a very complete account of the cultivation of the cane as carried on by the Chinese, and is perhaps the first work to describe and discuss cane varieties.

SCHACHT, H. Madeira und Tenerifa mit ihre Vegetations. Berlin, 1859.
Contains a complete analysis of the flower and the anatomy of the cane.

SLOANE, HANS. A Voyage to the Islands Madera, Barbados, etc.—with the Natural History. London, 1707-25.
Gives details of manufacturing and cultivating processes, and contains a fine drawing of the inflorescence of the cane.

TUSSAC, F. R. DE. Flora Antillarum. Paris, 1800-08.
The best of the early descriptions of cultivation and manufacture. It contains a first-hand account of the introductions of the Otaheite cane by Bligh, and of the same and others by the French from Mauritius. The coloured plates are remarkable for their fidelity and beauty.

WORKS OF TRAVEL, HISTORIES, ETC.

ALBERTUS, AGENSIS (1108) and JACOBUS DE VITRIACO (1124), in Gesta Dei per Francos.
In this work is to be found the earliest European description of manufacture.

ANGLERIUS PETER MARTYR. The first three decades of the New World. English translation by R. Eden. London, 1555.
The earliest description of sugar growing in the New World, fixing the dates of the first beginnings in Hispaniola.

BARROW, JOHN. Travels in China. London, 1806.

BECKFORD, WILLIAM. A descriptive Account of the Island of Jamaica. London, 1790.

BROWN, WILLIAM. Civil and Natural History of Jamaica. London, 1789.

BUCHANAN, HAMILTON. A Journey from Madras through the Countries of Mysore, Canara and Malabar. London, 1807.
A very detailed account of Indian methods of cultivation, irrigation, manufacture and cost of production.

CRAWFURD, JOHN. History of the Indian Archipelago. London, 1820.

DALBY, THOMAS. A historical Account of the Rise and Growth of the West Indian Colonies. London, 1690.

EDWARDS, BRYAN. A History, Civil and Commercial, of the West Indies. London.
A classic, the chapters on the sugar industry being particularly interesting.

FERMIN, PHILIPPE. Description générale, historique, géographique et physique de la Colonie de Suriname. Amsterdam, 1769.

Gage, Thomas. The English-American, his Travail by Land and Sea. London, 1648.

Believes that the cane grew naturally in Guadeloupe.

Handelman, N. Geschichte der Amerikanische Kolonisation. Kiel, 1856.

Handelman, N. Geschichte der Brasilien. Berlin, 1860.

Hennepin. Description de la Louisiane. Paris, 1683.

States that he saw the sugar cane growing on the banks of the Mississippi.

Herrera, Tordesillas. Historia general de los Hechos de los Castellanos en las Islas y Tierra Firma der Mar Oceano. Madrid, 1601.

Contains perhaps the first illustration of a factory and mill.

Humboldt, A. and Bonpland, A. Voyage aux Régions equinoctiales du Nouveau Continent fait en 1799-1804. Paris, 1814.

The Cuban industry of that time is acutely analysed.

Labat, Père. Nouveau Voyage aux Iles d'Amérique. Paris, 1722.

Contains a detailed account of cultivation and manufacture, with plans and illustrations.

Léry, J. de. Histoire de Voyage fait du Brésil. La Rochelle, 1578.

An authority for the pre-Columbian presence of the cane in America.

Ligon, Richard. A true and exact History of Barbados. London, 1657.

The earliest detailed account of cultivation and manufacture, with also the earliest reference to the deterioration of sugar. His account of manufacture is applicable to certain districts two hundred and fifty years after the date of publication.

Neuhoff, Johann. Gedenkweerdige Brasiliense Zee en Lant Reise. Amsterdam, 1582.

Contains the first mention of a cane pest, a black worm, Guirapeakoka or Pao de Galinha, which attacks the roots of the cane.

Pike, Nicolas. Sub-tropical Rambles in the Land of the Aphanopteryx. New York, 1878.

Schomburgk, R. The History of Barbados. London, 1848.

Staunton, G. An authentic Account of an Embassy from the King of Great Britain to the Emperor of China. London, 1878.

Chinese methods of cultivation and manufacture.

Stavorinus, Jan Splinter. Reize van Zeeland over de Kaap de Goede Hoop naar Batavia, Bantam, Bengalen, enz. Leyden, 1793.

Willughby, F. A Relation of a Journey through a great part of Spain. (In John Ray's Observations, etc., through part of the Low Countries.) London, 1673.

Describes the state of the art as then practised in Spain.

Encyclopædias and Dictionaries.

All encyclopædias give some space to Sugar. A selection is given of those affording a more extended treatment. Duplication, by the introduction of encyclopædias which have copied from others, is avoided.

Encyclopædia Britannica. First edition, 1711; eleventh edition, 1911.

The successive editions afford a picture of the development of the industry, while the statistical tables when dovetailed together afford a nearly unbroken sequence.

Encyclopédie Méthodique. Diderot et d'Alembert. Paris, 1751.

The second edition of 1790 gives a very detailed account of cultivation and manufacture. It is evidently written by Dutrône, or based on his treatise.

Penny Encyclopædia. London, 1833-46.

The historical account of sugar is good.

Encyclopædia Metropolitana. London, 1836.

La Grande Encyclopédie. Paris, 1886; 1903.

Le Grande Dictionaire Universelle. La Rousse. Paris, 1866; 1876.

Brockhaus. Konversations Lexicon. Leipzig, 1796. Fourteenth edition, 1901.

Meyer. Neues Konversations Lexicon. Berlin, 1839. Sixth edition, 1902.

Ersch und Gruber. Allgemeine Encyclopädie der Wissenschaft und Kunst. Berlin, 1813, and still in process of publication.

Bailey, L. H. Cyclopædia of American Agriculture. New York, 1907.

Barry. Industrial Chemistry. London, 1878.

Based on Payen, *q.v.*

Charpentier. Encyclopédie chimique. Paris, 1880.

The article on sugar by Frémy is very complete.

Figuier. Les Merveilles de l'Industrie. Paris, 1860.

Contains much information not to be found elsewhere.

Gmelin. Handbook of Chemistry. Translated by Watts. London, 1862.

Valuable for its very extensive bibliography.

Goorkom, van. De Oost-Indische Cultuurs. Amsterdam, 1880; 1890; 1916.

Gregory. Dictionary of Arts and Sciences. London, 1806; 1827.

Jamieson. Dictionary of Mechanical Science. London, 1807.

Knapp. Lehrbuch der Technische Chemie. Leipzig, 1851.

Knight. American Mechanical Dictionary. New York, 1876.

Laboulaye. Dictionaire des Arts et des Manufactures. Paris, 1855; 1886.

Lami. Dictionaire de l'Industrie et des Arts Industrielles. Paris, 1881.

Muspratt. Chemistry, Theoretical, Practical and Analytical and relating to the Arts and Manufactures. London, 1853-61.

This work was translated into German and now (1920) a new German "Muspratt" is appearing. The earlier German editions give a good account of the development of the saccharate processes.

Payen. Chimie Industrielle. Paris, 1851.

This work contains Payen's classical description of the botanical structure of the cane, together with the fine plates illustrative thereof.

Ronalds and Richardson. Chemical Technology. London, 1855.

Although based on Knapp (*q.v.*), the article on sugar is original, and affords a good description of the state of the art at the time. A full account of Bessemer's work on the centrifugal is given, as well as a description of Moore's pressure regulator for cane mills.

Schubarth. Handbuch der Technische Chemie und Chemische Technologie. Berlin, 1851.

Semler. Die Tropische Agrikultur. Weimer, 1888.

Simmonds. Tropical Agriculture. London, 1877.

Spon. Encyclopedia of Industrial Arts. London, 1884.

Stohmann und Engler. Handbuch der Technische Chemie. Berlin, 1872.

Thorpe. Dictionary of Applied Chemistry. London, 1913.

A descendant of Ure (*q.v.*). The article on sugar analysis and polarimetry is valuable.

Tomlinson. Cyclopedia of Useful Arts. London, 1854.

Ure. Dictionary of Arts, Manufactures and Mines. London, 1839, 1851.

An excellent account of the state of the art of the period.

Vincent. Chemistry as applied to the Arts and Manufactures. London (undated.)

Watts. The Commercial Products of India. London, 1908.

Wurtz. Dictionaire de Chimie. Paris, 1876; 1884.
The accounts of the development of the saccharate and osmosis processes are very complete.

Works dealing with History and Commerce.

Ankersmit, P. Scheikundig Overzicht der Suiker. Amsterdam, 1859.

Beeton, M. B. The Truth about the Foreign Sugar Bounties. London, 1889.

Boizard et Tardieu. Histoire de la Législation du Sucre (1664-1891). Paris, 1891.

Dureau, B. L'Industrie du Sucre depuis 1860. Paris, 1894.

Ellis, E. D. An Introduction to the History of Sugar as a Commodity. Philadelphia, 1905.

Farrer, T. H. The Sugar Convention. London, 1889.

Garland, A. La Industria Azucarera en el Peru. Lima, 1895.

Geerligs, H. C. P. The World's Cane Sugar Industry, Past and Present. Manchester, 1912.

Goerz, J. Handel und Statistik des Zuckers. Berlin, 1895.

Guyot, I. The Sugar Question in 1901. London, 1901.

Hagemeister, J. Des Rohrzuckers Erzeugung, Verbrauch und Verhaltniss zum Rübenzucker. Berlin, 1843.

Harris, F. S. The Sugar Beet in America. New York, 1919.

Hulsman, J. De Suiker uit Natuurkundig, Technisch en Economisch Oogpunt beschouwd. 's-Gravenhage, 1885.

Hutcheson, John M. Notes on the Sugar Industry of the United Kingdom. Greenock, 1901.
Contains much intimate history not available elsewhere.

Katzenstein. Die Deutsche Zuckerindustrie und Zuckerbesteurung in ihren geschichtlichen Entwickelung dargestellt. Berlin, 1897.

Kaufmann, W. Welt Zuckerindustrie und Internationales und Koloniales Recht. Berlin, 1904.

La Rousse. Histoire abrégée du Sucre. Montpellier, 1821.

Légier, E. Histoire des Origines de Fabrication de Sucre à France et aux Colonies. Paris, 1901.
Contains very much information on the early history of legislation, invention and commerce in both beet and cane industries.

Lippmann, E. O. von. Geschichte des Zuckers. Leipzig, 1890.
A monumental work, tracing the development from the earliest times to the present. Very rich in quotations from the ancients.

Martineau, G. Free Trade in Sugar. London, 1889.

Mathieson, G. The Sugar Convention. London, 1889.

Milburn, W. Oriental Commerce. London, 1825.

Moseley, B. A History of Sugar. London, 1790.

Myrick, H. and Stubbs, W. C. The Sugar Industry of America. New York, 1897.

Myrick, H. The American Sugar Industry. New York, 1899.

Napoleon III. Considérations sur la Question des Sucres. Paris, 1842.

Neumann, C. A. Vergleichung der Zuckerfabrik aus Runkelrübe in Europa—aus Zuckerrohr in Tropenländern. Prague, 1837.

Neumann, C. K. und Divis, W. J. Entwurf einer Geschichte der Zuckerindustrie in Böhmen. Prague, 1891.

Paasche, H. Die Zuckerproduktion der Welt. Leipzig, 1905.

Pegolotti. La Practica della Mercature. In Vol. III of Pagnini's Della Dezima e delle altre Gravezze. Lisbon and Lucca, 1776.

Gives some account of the Mediterranean trade.

Reed, W. Sugar; History of its Introduction to various Countries, its Culture, Manufacture, its Prices from 1319 to date. London, 1886.

Reed, W. History of Sugar and of Sugar-yielding Plants. London, 1866.

Reese, J. De Suikerhandel van Amsterdam van 1815-1914. 's-Gravenhage, 1914.

Roth, H. L. A Report on the Sugar Industry of Queensland. Brisbane, 1880.

Schaar, C. Das Zuckerrohr, seine Heimat, Kultur und Geschichte. Zürich, 1890.

Stein, S. Zucker Erzeugung und Verbrauch der Welt. Prague, 1902.

Stokzil, C. Entstehung und Fortentwickelung der Zuckerfabrikation. Brunswick, 1851.

Tolpygnin, M. A. The Sugar Industry from its Beginning to the Present Time. Kiev, 1894.

Vogt, P. L. The Sugar Refining Industry in the United States. Philadelphia, 1908.

A valuable account of the history of the "Sugar Trust."

Young, W. The West Indian Common-Place Book. London, 1807.

Contains much statistical matter, otherwise inaccessible.

Zimmermann, R. Der Zucker in Welthandel. Berlin, 1895.

Works dealing with the Agriculture of the Cane.

Antèlme, C. Memoire sur la Culture de la Canne à Sucre à Maurice. Bordeaux, 1866.

Basset, N. Guide de Planteur des Cannes. Paris, 1889.

Belgrove, W. An Essay on Husbandry and Planting. Boston (Mass.), 1755.

Bell, F. A. Handbook of Practical Directions for Sugar Cane Planting, Sugar Making and the Distillation of Rum. Sydney, 1866.

Bell, J. Culture of the Sugar Cane and Distillation of Rum. Calcutta, 1831.

Bobierre, E. Culture de la Canne à Sucre. Paris, 1865.

Bonâme, P. Culture de la Canne à Sucre à Guadeloupe. Paris, 1884.

Bourgoin, d'Orly. Culture de la Canne à Sucre. Paris, 1867.

Burlamaqui, F. L. C. Monographia de Canna de Assucar. Rio de Janeiro, 1862.

Quite worthy to rank with the better-known treatises.

Caines, C. Letters on the Cultivation of the Otaheite Cane. London, 1801.

Campen, Oulevaar van. Opmerking tot Verbetering van de Suikercultuur en het Fabrikaat op Java. Rotterdam, 1881.

Casaux de Marquis. Essai sur l'Art de Cultiver la Canne. Paris, 1778.

Deals with practice in Grenada, discusses the effect of rainfall and climate, and advocates the adoption of the methods first practised by Jethro Tull.

Colson, A. A. Culture de la Canne à Sucre aux Iles Hawaii et à Réunion. Réunion, 1905.

Delteil, A. La Canne à Sucre. Paris, 1884.

Deventer, W. van. De Cultuur van het Suikerriet. Amsterdam, 1914.
A detailed account of present-day Java practice.

Evans, W. The Sugar Planter's Manual. London, 1847.

Fernandez-Umpierre, M. Manual Pràctica de la Agricultura de la Caña de Azúcar. Puerto Rico, 1884.

Gomez, J. Cultura de la Caña de Azúcar. Madrid, 1884.

Herring, C. J. De Cultuur en de Bewerking van het Suikerriet. Rotterdam, 1858.

Hibbert. Hints to the Jamaica Sugar Planter. London, 1883.

Kerr, W. A Practical Treatise on the Cultivation of the Sugar Cane. London, 1851.

Krüger, W. Das Zuckerrohr und seine Kultur. Magdeburg, 1899.
A very complete and detailed monograph on the botany of the cane and its agriculture. The earlier results of the Java "proef-stations" are recorded.

La Tour de St. Igest. Culture de la Canne à Sucre à l'Ile Maurice. Paris, 1862.

Lange, W. Praktische Handleiding tot de Suikercultuur. Amsterdam 1846.

Leon, J. A. On Sugar Cane Culture in Louisiana, Cuba, etc. London, 1848.

Lorens y Sala. Plantacion y Cultivo de la Caña de Azúcar. Valencia, 1877.

Lotman, G. Handboek voor het Onderzoek van Grondstoffen en Produkten der Suikerindustrie. Amsterdam, 1886.

Lotman, G. Praktische Handleiding tot het Onderzoek van alle Suikerhoudende Stoffen. Amsterdam, 1867.

Malavois. Culture de la Canne et Fabrication du Sucre à l'Ile Réunion. Paris, 1862.

Martin, S. An Essay on Plantership. Antigua, 1767.

Morejon y Gato. Discurso sobre las Buenas Propriedadas de la Tierra Bermeja para Cultura de Caña de Azúcar. Habana, 1797.

Peterkin, J. A Treatise on Planting. St. Kitts, 1790.

Porter, G. R. Nature and Properties of the Sugar Cane. London, 1830.

Potter, F. J. De Cultuur van het Suikerriet op Java. Anhem, 1869.

Robinson, S. H. The Bengal Sugar Planter. Calcutta, 1849.

Reynoso, A. Ensayo sobre el Cultivo de la Caña de Azúcar. Madrid, 1865.
On translation into Dutch this work had a great influence in Java, where modern methods of agriculture, as opposed to native routine, are still known as Reynoso's system.

Rossignon. Manual del Cultivo de Caña de Azúcar. Paris, 1878.

Sagot et Raoul. Manuel Pratique des Cultures Tropicales. Paris, 1893.

Silliman, B. Manual of the Cultivation of the Cane and of the Fabrication and Refinement of Sugar. Washington, 1833.

Stubbs, W. C. The Sugar Cane. Washington, 1897.

Tiemann, W. The Sugar Cane in Egypt. Manchester, 1903.

Tuero, F. P. La Caña de Azúcar. Porto Rico, 1891.

Walker, H. The Sugar Industry of the Island of Negros. Manila, 1909.

Watts, F. Introductory Manual for Sugar Growers. London, 1893.

Whitehouse, W. F. Agricola's Letters and Essays on Sugar Farming in Jamaica. London, 1843.

Wray, L. The Practical Sugar Planter. London, 1848.
A very excellent treatise and still worth reading.

Anon. An account of the Method and Expenses of the Cultivation of the Sugar Cane in Bengal. London, 1814.

Anon. Letters to a Young Planter. London, 1776.

Various. Eight Practical Essays on the Cultivation of the Sugar Cane. Jamaica, 1843.

Various. Three Essays on the Cultivation of the Cane in Trinidad. Port of Spain, 1848.

Various. Twelve Prize Essays on Sugar. Georgetown, 1876.

Various. The Overseers' Manual. Georgetown, 1882.

Books dealing with Sugar Manufacture.

The title and date will indicate whether Cane or Beet is the subject. Many books, especially French treatises, discuss both arts in one volume. Several on the Cane include both Agriculture and Manufacture, so that the separation is not absolute.

Baker, J. P. Essay on the Art of making Muscovado Sugar. London, 1775.

Basset, N. Guide du Fabricant du Sucre. Paris, 1863; 1872.

Baudet, Pellet et Saillard. Traité de la Fabrication du Sucre. Paris, 1894; 1911.

Embraces cane agriculture.

Baudrimont, A. Du Sucre et de sa Fabrication. Paris, 1841.

Betancourt, P. Metodo teorico-practico de Elaboracion de Azúcar. Puerto Principe, 1868; Habana, 1893.

Biggs, J. Observations on the Manufacture of Sugar and Rum in Jamaica. London, 1843.

Blachette and Zoega. Manuel du Fabricant et du Raffineur du Sucre de Canne. Paris, 1833; 1841; 1914.

Bloudel, J. Manuel de Fabrication de Sucre de Betteraves. Douai, 1870.

Blouin, P. Manuel Pratique du Fabricant du Sucre. Paris, 1889.

Chandelet. Art de Raffineur. Paris, 1828.

Claassen, H. Beet Sugar Manufacture. New York, 1907; 1910.

This is the English translation by Hall and Rolfe of a very able exposition of some of the finer points.

Comallonga, J. Manual del Quimico y Maestro de Azúcar. Habana, 1897.

Crookes, W. The Manufacture of Beet Sugar. London, 1870.

This work was written with the object of stimulating interest in England in an industry to be localized there.

Dombasle, M. Faits et Observations sur la Fabrication de Sucre de Betteraves. Paris, 1831.

Dubrunfaut, L. Art de fabriquer le Sucre des Betteraves. Paris, 1823.

Dubrunfaut, A. P. Le Sucre. Paris, 1870.

Dubrunfaut, A. P. L'Osmose et ses Applications Industrielles. Paris, 1873.

Duhamel de Monceau, H. L. Art de raffiner le Sucre. Paris, 1764.

This work was largely used in the preparation of later works.

Dutrône la Couture. Précis sur la Canne et d'en extraire le Sucre. Paris, 1790.

This book describes the art in Santo Domingo prior to the black rebellion. It has formed the basis of many subsequent treatises and encyclopædia articles, and the plates illustrative of the cane have been copied, doubtless unwittingly, as late as 1914. Dutrône was much in advance of his time, and gives an original table of the elevation of the boiling points of sugar solutions.

Evangelista. Fabricacion del Azúcar de Caña. Valencia, 1895.

Faccarini. La Fabbricazione delle Zuchero di Barbebietola. Milan, 1901.

Geerligs, H. C. P. On Cane Sugar and the Process of its Manufacture in Java. Manchester, 1909.

This is one of a series of textbooks produced under the authority of the Java "Syndicaat" of sugar manufacturers. It has also appeared in Dutch and Spanish, and is a treatise of exceptional merit. The chemical and physical aspects of sugar making are considered to the exclusion of engineering.

Geerligs, H. C. P. Practical White Sugar Manufacture. London, 1915.

Gredinger, A. Die Raffination des Zuckers. Leipzig, 1903.

Describes European refinery systems.

Grobert, J. de, Labbé, G., Manoury, H., and Vreese, O. de. Traité de la Fabrication du Sucre de Betteraves et de Cannes. Paris, 1913. 2 vols.

Harloff, W. H. Th. and Schmidt, W. Plantation White Sugar Manufacture. London, 1913.

Heriot, T. H. P. Science in Sugar Production. Manchester, 1907.

Addressed to non-technically trained factory employés, and filling a very useful position.

Higgins, Bryan. Observations and Advices for the Improvement of the Manufacture of Muscovado Sugar. St. Jago de la Vega, 1797-1801.

Horsin-Déon, P. Traité Théorique et Pratique de la Fabrication du Sucre. Paris, 1883, 1911 (Edited by Horsin-Déon fils).

A standard French treatise.

Jonghe, De. Cours de Technologie Sucrérie. Paris, 1907.

Jones, L. and Scard, F. I. The Manufacture of Cane Sugar. London, 1909, 1921.

Concerned with clear and simple descriptions of machinery and processes and with special reference to British West Indian practice.

Karlik, H. Die praktische Zuckerfabrikation. Prague, 1903.

Lamar. Manual practico del Administrador del Ingenio. Habana, 1888.

Landa. El Administrador y el Ingenio. Habana, 1866.

Discusses minute details, such as the dietary of slaves.

Légier, E. Manuel du Fabricant du Sucre. Paris, 1901.

Leon, J. A. The Art of Manufacturing and Refining Sugar. London, 1848.

Leplay, H. Osmometrie. Paris, 1887.

Lock, C. G. W., Wigner, G. W., Harland, R. H. Sugar Growing and Refining. London, 1882.

Lock, C. G. W., Newlands, J. A. R., Newlands, B. E. R. Sugar: A Handbook for Planters. London, 1888, 1911.

Both the above devote considerable space to agriculture.

Mackintosh, J. G. The Technology of Sugar. London, 1901, 1911.

Mattos, de A. G. Escobo de un Manual para los Fazendeiros de Assucar. Rio de Janeiro, 1882.

Mauméné, E. J. Traité théorique et pratique de la Fabrication du Sucre. Paris, 1876.

It is interesting to compare this work with that of Walkoff, written at the same time, and representative of the German standpoint.

Maxwell, F. Sulphitation in White Sugar Manufacture. London, 1915.

Moorsel, F. H. van. Suikerfabrikatie. Amsterdam, 1853.

Mornay, A. de. Fabricant du Sucre et Raffineur. Paris, 1837.

Mulder, G. J. Vergelijkend Onderzoek van Suiker met en zonder Stoom bereid. Rotterdam, 1850.

Murke, F. Condensed Description of the Manufacture of Beet Sugar. New York, 1921.

NICOL, E. Essay on Sugar Making and Sugar Refining as practised in the Clyde Refineries. Greenock, 1865.

An excellent account of the practice of the time, with much historical information.

PASSAUER, B. VON. Die Zuckerfabrikation. Vienna, 1894.

PIMIENTA. Manual Practico de la Fabricacion del Azúcar de Caña. Madrid, 1881.

Here is contained what is perhaps the first formal account of a system of what is now called "chemical control," and first use of the conception of "normal juice" or "guarapo natural."

REISSING. De Suikerraffinadeur. Amsterdam, 1793.

REGNIER, R. VON. Die Fabrikation des Rübenzuckers. Vienna, 1878.

This work gives an account of early Dutch practice, and is independent of Duhamel de Monceau.

ROESSLING. Gründische Eröffnung für Zuckerraffinerien. Berlin, 1835.

RONNEBERG, G. Sucrérie: Détails de Fabrication. Paris, 1843.

RÜMPLER, H. Die Nichtszuckerstoffe der Rüben in ihren Beziehungen zur Zuckerfabrikation. Brunswick, 1898.

A valuable monograph.

SAILLARD, É. Betterave et Sucrerie de Betteraves. Paris, 1913.

ST. CROIX, DE MARQUIS. Fabrication du Sucre aux Colonies Françaises. Paris, 1843.

SCARD, F. I. The Cane Sugar Factory. London, 1913.

A catechism for beginners.

SCHMIDT, W. Handbuch der Zuckerfabrikation. Weimar, 1850.

SCHULZ, C. G. Die Fabrikation des Zuckers aus Ruben. Berlin, 1865.

SIERRA, DE F. Metodo teorico-practico para elaborar Azúcar. Habana, 1857.

SIEMENS, C. UND GROTHE, H. Zuckerfabrikation theoretisch und praktisch dargestellt. Brunswick, 1871.

SOAMES, P. Treatise on the Manufacture of Sugar from the Sugar Cane. London, 1872.

STAMMER, K. Lehrbuch der Zuckerfabrikation. Brunswick, 1874.

A standard German textbook.

STEYN, F. Die Fabrikation des Rübenzuckers. Vienna, 1883.

STOHMANN, F. Handbuch der Zuckerfabrikation. Berlin, 1878, 1886. Revised by Schander, 1912.

A work of great merit.

TACCANI, A. Fabbricazzione delle Zuchero di Barbebietola. Milan, 1901.

TEYSSIER, R. Le Sucrérie. Paris, 1912.

TIKHOMEROFF, A. Manufacture of Beet Sugar. Kiev, 1893.

VRANCKEN, E. Manuel de la Fabrication du Sucre de Betteraves. Brussels, 1911.

WALKOFF, E. Der praktische Rübenzucker-Fabrikant und Raffinadeur. Brunswick, 1872.

A French edition has also appeared, and it has remained for long a standard work.

WARE, L. Beet Sugar Manufacture and Refining. New York, 1907.

This is the only detailed treatise originally written in English and dealing exclusively with beet sugar manufacture. French practice is discussed more than German, and American developments are neglected.

WEATHERLY. Treatise on the Art of Sugar Boiling. Philadelphia, 1878.

WILLOW. The Art of Making Sugar. London, 1752.

WOHRYZEK, O. Chemie der Zuckerindustrie. Berlin, 1914.

A very complete and detailed monograph.

WORKS ON ANALYSIS AND CHEMICAL CONTROL.

Many textbooks include an account of the methods involved in Sugar Analysis. The treatment is, however, generally so condensed as to be actually faulty.

ALLEN, A. H. Commercial Organic Analysis. London, 1898, 1913.

BARBET, E. Analyse des Liquides sucrées. Paris, 1879.

BATES, F. I. AND JACKSON, R. F. Constants of the Quartz Wedge Saccharimeter and the Specific Rotation of Sugar. Scientific Paper 268, U.S. Bureau of Standards.

An invaluable monograph.

BENJAMIN, J. Sugar Analysis. New York, 1880.

BROQUET, R. ET DETHIER C. Manuel de l'Analyse chimique à l'Usage des Fabricants du Sucre. Brussels, 1898.

BROWNE, C. A. Handbook of Sugar Analysis. New York, 1913.

A work of great value, and by far the most complete of its kind in any language.

CHAMPION, H. ET PELLET, H. Contrôle chimique de la Fabrication du Sucre. Paris, 1874.

CHEVRON. Analyse des Substances sucrées. Paris, 1884.

FRIBOURG, C. L'analyse chimique des Sucréries et Raffineries de Cannes et de Betteraves. Paris, 1907.

FRÜHLING, R. UND SCHULZ, J. Anleitung zur Untersuchung der für die Zuckerindustrie in Betracht kommenden Materialen. Brunswick, 1876.

This is the standard German textbook which has passed through many editions.

GALLOIS ET DUPONT. Manuel Agenda du Chimiste de Sucrérie. Paris, 1896, 1902.

GANGE. Lehrbuch der angewandten Optik in der Chemie. Berlin, 1886.

GEERLIGS, H. C. P. Methods of Chemical Control used in Cane Sugar Factories. Manchester, 1904, 1911.

A very complete account of the organized Java control schemes.

GIVENS, A. Methods for Sugar Analysis. New York, 1911.

GOSSART, J. La Contrôle chimique de la Fabrication du Sucre. Lille, 1886.

GULLEMIN, J. Guide pratique du Chimiste du Distillerie et Sucrérie. Paris, 1890.

GUNNING, J. W. Saccharimétrie. Amsterdam, 1875.

HALLER ET GIRARD. Memento du Chimiste de Sucrérie. Paris, 1907.

HERRMANN, P. Verlustbestimmung und chemische Betriebscontrolle der Zuckerfabrikation. Magdeburg, 1903.

JACKSON, R. F. AND GILLIS, C. F. The Double Polarization Method for the Determination of Sugars. Scientific Paper 375, U.S. Bureau of Standards.

The most complete review of the subject.

LANDOLT, H. Das optische Drehungsvermögen organische Substanzen und desser praktische Anwendungen. Brunswick, 1888, 1898. English translation of first edition by Veley (London), and of second by Long (Easton, U.S.A.).

This is a standard textbook on the theory and practice of the polarimeter.

LE DOCTE, A. Traité complet de la Contrôle Chimique de la Fabrication du Sucre. Paris, 1883.

MERKEL, W. Sammlung von saccharometrische Tabellen. Leipzig, 1872.

MITTELSTADT, W. Technical Calculations for Sugar Works. New York, 1910.

Moignon, L'Abbé. Saccharimétrie Optique, Chimique et Melassimétrique. Paris, 1859.

Monier, E. Guide pour l'Essai et l'Analyse des Sucres Indigènes et Exotiques. Paris, 1864.

Morse, H. I. Calculations used in Cane Sugar Factories. New York, 1904, 1911.

Nikaido, Y. Beet Sugar Making and its Chemical Control. Philadelphia, 1909.

Pepper, E. S. Beet Sugar Analysis. Chino, 1897.

Picard, A. S. Tables Rapides pour l'Analyse des Jus sucrées. Paris, 1896.

Rolfe, G. The Polariscope in the Chemical Laboratory. New York, 1904.

Sidersky, D. Aide mémoire de Sucrérie. Paris, 1898.

Sidersky, D. Manuel du Chimiste de Sucrérie, de Raffinerie et de Distillerie. Paris, 1909.

Spencer, G. L. Handbook for Chemists of Beet Sugar Houses and Seed Culture Farms. New York, 1897.

Spencer, G. L. Handbook for Cane Sugar Manufacturers and their Chemists. New York, 1897, and many subsequent editions.

These last two books are to be found in nearly every sugar-house laboratory.

Spencer, G. L. Methods of Analysis used in the Factories of the Cuban-American Sugar Co. New York, 1911.

Stift, A. Leitfaden der Zuckerfabrikschemiker. Vienna, 1900.

Tervooren, H. A. P. M. Methoden van Onderzoek van de bij de Java Rietsuiker voorkomende Produkten. Amsterdam, 1909.

A detailed account of the methods accepted in Java.

Toury, L. Contrôle chimique dans la Raffinerie. Paris, 1910.

Tucker, J. H. Manual of Sugar Analysis. New York, 1881.

The earliest and still one of the best treatises in English on this subject.

Wackenrode, R. Anleitung zur chemischen Untersuchung technischen Produkten. Leipzig, 1875.

Wiechmann, F. G. Sugar Analysis. New York, 1893, 1911.

Wein, E. Tabellen zur quantitativen Bestimmung der Zuckerarten. Stuttgart, 1888.

Wiley, H. The Principles and Practice of Agricultural Analysis. Vol. III. Easton, 1897, 1911.

Woussen, M. De l'Analyse des Sucres. Valenciennes, 1878.

Works specialized on Steam and Engineering.

Abrahams, K. Die Dampwirtschaft in der Zuckerfabrik. Berlin, 1904, 1911. English translation of the first edition by Bayle, New York, 1911.

Burgh, N. A Treatise on Sugar Machinery. London, 1873.

Cambier, T. Le Combustible en Sucrérie. Paris, 1892.

Ernotte, J. Les Economies de Combustible en Sucrérie. Brussels, 1899.

Foster, E. Evaporation by the Multiple System. Sunderland, 1890, 1901.

Greiner, W. Verdampfen und Verkochen unter besonderen Berücksichtigung der Zuckerfabrik. Leipzig, 1912.

HAUSBRAND, E. Evaporating, Condensing and Cooling Apparatus. English translation by Green, London, 1903, 1911.

Remains a standard work on the subject. The tables are very extensive, and the treatment is mainly mathematical to the exclusion of descriptions of apparatus.

HIND, RENTON. Heat Conservation in Sugar Factories. Honolulu, 1916.

A detailed monograph of very considerable value.

JODIDI, S. Fuel Economy in Sugar Factories. Chicago, 1915.

JELINEK, H. Uber Verdampfapparaten und Verdampfstationen der Zuckerfabrikation. Prague, 1886.

KOPPESCHAAR, E. Evaporation in the Beet and Cane Sugar Factory. London, 1914.

MOLLE, W. Die theoretische Warmverbrauch einer Zuckerfabrik. Berlin, 1914.

PECQUEUR, O. Manuel pratique pour la Fabrication du Sucre appliqué aux Appareils à Vapeur. Paris, 1845.

STAMMER, K. Der Dampf in der Zuckerfabrik. Brunswick, 1891.

WALLIS-TAYLER, A. Sugar Machinery. London, 1908.

BOOKS DEALING WITH THE CHEMISTRY OF THE SUGARS.

ARMSTRONG, E. F. The Simple Carbohydrates and the Glucosides. London, 1913.

FISCHER, E. Untersuchungen über Kohlenhydrate und Fermente. Berlin, 1908.

LIPPMANN, E. O. VON. Die Chemie der Zuckerarten. Brunswick, 1895, 1905.

MACKENZIE, F. G. The Carbohydrates and their Simple Derivatives. London, 1914.

MACQUENNE, L. G. M. Les Sucres et leurs principaux Derivées. Paris, 1900.

TOLLENS, B. Kurze Handbuch der Kohlenhydraten. Berlin, 1895.

BOOKS DEALING WITH PESTS AND DISEASES.

BUTLER, E. F. Plant Diseases and their Remedies. Calcutta, 1917.

A general treatise, concerned mainly with Indian conditions and devoting much space to the cane.

DEVENTER, W. VAN. De dierlijke Vijanden van het Suikerriet op Java en hunne Parasiten. Amsterdam, 1909.

WENT, F. A. F. C. AND WAKKER, J. H. De Ziekten van het Suikerriet op Java. Leyden, 1898.

A complete treatise up to the date of publication.

WORK ON FILTRATION.

BÜHLER, F. A. Filters and Filter Presses. English translation by J. J. Eastick, with a section on Sugar Filtration. London, 1914.

WORK ON RUM.

PERRAULT. Le Rhum. Paris, 1903.

Bibliographies.

Meyer, H. H. B. Select List of references on Sugar, mainly in its Economic Aspect. Washington, 1911.

List of the Works in the Congressional Library, Washington, U.S.A.

Roth, H. Ling. A Guide to the Literature of Sugar. London, 1890.

Various Unclassified Works.

Candolle, A. de. Origines des Plantes cultivées. Paris, 1883.

Cantero, J. G. Los Ingenios. Coleccion des Vistas de los principales Ingenios en la Isla de Cuba. Habana, 1857.

The coloured plates give a faithful representation of the art of the time. The earliest Rillieux apparatus are shown.

Grainger, T. The Sugar Cane. A Poem. London, 1764.

Much information and keen observation is contained in this work, considered by Dr. Johnson to be the finest didactic poem in the English language.

McCulloh, R. S. Senatorial document No. 50. Washington, 1848.

While primarily concerned with a discussion on spirit hydrometers, much information is afforded on raw and refining operations of the period.

Rawson, W. R. Report on the Rainfall of Barbados and its Influence on the Sugar crops, 1847-71. London, 1874.

Ritter, C. Uber die geographische Verbreitung des Zuckerrohr. Berlin, 1840.

A work of much learning and research.

Rolph, G. M. Something about Sugar. San Francisco, 1917.

An excellent non-technical volume.

Schaar, C. Das Zuckerrohr, seine Heimat, Kultur und Geschichte. Zürich, 1890.

United Kingdom. Abridgments of Specifications for Patents. Classes "Sugar," "Condensing, Distilling and Evaporating Apparatus," "Centrifugals" and "Filters."

The specifications begin in 1617 and give a picture of the state of, and of the progress in, the industry at any period. The French and U.S. patents not being grouped in classes are less convenient for reference.

United States. Patent Office Report for 1848.

A very good description of the Louisiana industry and of the introduction of the first Rillieux apparatus is given. This volume also contains some very fine plates illustrative of the anatomy of the cane, and which were prepared by Corda.

Walter, H. The Sugar Industry of Mauritius. London, 1913.

Treats of the correlation between climate and crops as found in Mauritius and is the only work of its class.

Various. East India Sugar. Papers respecting the Culture and Manufacture of Sugar in British India. London, 1824.

Reports of civilians in the service of the Honourable East India Company, containing much information on native methods and many quotations from earlier authors.

HISTORICAL CONSPECTUS

According to Hindoo mythology, Vishna Mitra created the sugar cane in the temporary paradise of Rajah Irishanku. On the destruction of this paradise the sugar cane was granted to the use of mortals.

327 B.C. Soldiers of Alexander the Great were the first Europeans to see the sugar cane.

600 A.D. (circa). The Chinese Emperor Tsai-Heng sent agents to Behar (India) to study the art of sugar manufacture. At this period the marketed product was the juice concentrated nearly to dryness. The art gradually extended westwards and developed in Persia and the surrounding countries. Nestorian monks at Gondishapur at the mouth of the Euphrates were the first to refine, and to produce a white sugar. The invention of the sugar loaf is perhaps to be attributed to them.

627. Sugar is mentioned as amongst the spoils captured at the taking of Dastagerd (Persia) by the Byzantines.

641. Egypt conquered by the Arabs (Saracens), who introduced the sugar cane, thus marking the beginning of the Mediterranean industry.

755 (circa). Abdur-rahman I introduced the cane to Spain.

827. The Arabs reached Sicily.

As a result of the Saracenic incursion to Africa and Europe a substantial industry was established on the littoral and in the islands of the Mediterranean, especially in Egypt, Spain and Sicily. A superior large crystal sugar was made in Egypt, which was marketed as far east as India, where to this day this type of sugar is known as Egyptian or Cairene. In Spain the industry reached a great extension, some 75,000 acres being under cultivation by 1150. After this date Christians drove the Moslems from Spain, and the industry languished. It still survives with an unbroken descent of 1200 years, a monument to the lost Arabic civilisation. Sugar, probably Egyptian, was used in the King's household in England in 1264, and in 1319 Tommaso Loredano, a Venetian merchant, sent a cargo of sugar to England in exchange for wool. On the return journey both ship and cargo were captured by English pirates.

1419. The University of Palermo gave instruction in the cultivation and irrigation of the cane.

1420. Dom Henry the Navigator sent the cane to Madeira, and subsequently under Portuguese enterprise it reached the Azores, the Canaries, the Cape de Verde Islands and West Africa. These introductions mark the beginning of the decline of the Mediterranean industry.

1449. Pietro Speciale constructed a three-roller mill, the rollers being either vertical or horizontal.

1453. The Turk conquered Constantinople and subsequently extended his empire :—Cairo, 1517 ; Rhodes, 1532 ; Cyprus, 1571. The advent of the Turk marks the extinction of the Levantine industry, followed by a great rise in the price of sugar.

1493. Columbus in his second voyage took the cane to Hispaniola. Canary Island cane experts accompanied him. They died, but the cane flourished. These islanders had come to work on the colono system, which even then formed a part of sugar cane economy.

1497. Vasco da Gama doubled the Cape of Good Hope and, opening up a new all-water route to India, contributed to the decline of the Venetian refining trade. Da Gama observed an active sugar market at Calicut.

1500-1600. This century is marked by the extension of the sugar industry in the New World under Spanish and Portuguese influence, and by the declension of that of the Mediterranean and Madeira ; that of Sicily, however, languished till the seventeenth century. Hispaniola and Brazil were the chief neo-tropical centres. The slave trade, which had its inception in the enforced labour of Moorish prisoners of war, aided in the development. The West European refining trade began, Lisbon and Antwerp being the first towns to engage therein.

1502. Moors were working in the mines in Hispaniola.

1503. Venetians disclosed the secrets of refining.

1506. Second introduction of the cane to the New World by Pedro de Atienza, under the influence of Nicolas de Ovando, Governor of Hispaniola.

1510 (circa). Either Aquilon or Miguel Ballestros were the first to make sugar in the Western Hemisphere.

1515. Gonzales de Velosa erected a horse-driven mill at Rio Nigue in Hispaniola, and he may be considered the founder of Western industry. Old writers describe the vertical three-roller mill with co-linear centres as his, but he probably only introduced the type first made by Pietro Speciale in 1449.

1520. The cane reached Mexico ; 1532, Brazil ; 1535, Peru ; 1547, Cuba ; 1548, Porto Rico.

1532. Martin Alfonso de Gouza and Francisco Romeiro first planted the cane in Brazil.

1540. Antwerp exported refined sugar to England.

1544. Two refineries were operating in England, the interested parties being Cornelius Bussin, Ferdinando Points, John Gardiner, William Chester and John Mounsie. London refined sugar was then inferior to that of Antwerp.

1573. A German refinery was operating at Augsberg.

1590. Oliver de Serres observed the sweet nature of the beet.

1600-1700. The New World industry waxed. The British, French and Dutch became producers. The French refining industry started.

1615. Sugar first made in the Japanese Empire.

1624-1645. The Dutch occupation of Brazil. In 1654 the Portuguese expelled the Dutch from Brazil, who, migrating to the Antilles, aided in the establishment of a sugar industry there, Benjamin Acosta, a Dutch Jew, founding that of Martinique.

1637. Sugar first exported from Java. The Dutch East India Company conducted a scheme of sugar production in connection with native growers.

1640 (circa). Beginning of the British (St. Kitts, Barbados, etc.) and of the French (Guadeloupe, Martinique) industries.

1651. The Navigation Laws of Oliver Cromwell greatly stimulated the British refining trade.

1659. The first German operatives introduced into Great Britain. From this time right up to the beginning of the nineteenth century they dominated the British refining industry, reducing the owners to a state of abject dependence.

1660. Sir Thomas Moddyford planted the first cane in Jamaica.

1664. Jan Doenson erected a horse-driven mill in Essequebo.

1669. The first refinery (The Western Sugar House) built in the Clyde district.

1670. Jesuits carried the cane to Argentina.

1688. Fifty refineries were operating in Great Britain.

1689. A refinery was working in New York on Liberty Street.

1697. The French in possession of Santo Domingo.

1700-1800. The period of greatest prosperity in the West Indies, Santo Domingo and Jamaica being the largest individual producers. Towards the end of this century the total West Indian production reached 250,000 tons. The Dutch in Java systematically restricted production in order to maintain prices.

1700 (circa). Père Labat introduced many improvements in the French West Indies.

1747. Mahé de la Bourdonnais initiated the Mauritian industry.

Margraff isolated cane sugar from the beetroot.

1751. The Jesuits carried the cane to Louisiana.

1768. Bougainville brought the Otaheite cane to Mauritius.

1778. Saint-Hill introduced the syphon-float system of defecation in Jamaica, and also the use of lime.

1782. Cossigny brought Java canes to Mauritius.

1789. The Otaheite and Java canes brought by the French to the West Indies.

1791. The slave rebellion in Santo Domingo. Disappearance of the industry there. Many white refugees escaping to Cuba developed sugar production in that island.

1793. Bligh brought the Otaheite cane to Jamaica, and its introduction combined with the elimination of Dominican competition gave to the British West Indies their most prosperous era.

1794. Collinge, an axle-tree maker of Lambeth, built the prototype of the modern three-roller mill.

1795. De Bore established the Louisianan industry.

1800-1900. The abolition of slavery, the development of the beet sugar industry, and improved technical methods mark this century.

1801. The Act of Union between Great Britain and Ireland placing an additional excise on Irish refined sugar destroyed the industry there.

1802. Achard first manufactured beet sugar at Cunern in Silesia.

1802-1814. Establishment of a beet sugar industry in Europe, mainly by the authority of Napoleon I.

1805. Wood charcoal used by Guillon.

James Cook founded the Clyde sugar machinery trade.

Steam engines began to be used extensively in the raw sugar industry.

1806. The first bounty paid on beet sugar. Spanish prisoners of war employed as experts in beet sugar houses in France.

1810. Figuier prepared animal charcoal.

1812. Schools for the sugar industry established in France.

1813. Howard invented the vacuum pan.

Animal charcoal used in an Orleans refinery.

1814. Fall of Napoleon and temporary decline of the beet sugar industry.

1816. Java restored to the Dutch.

1817. Thomas Scott carried the cane to Australia.

1821. Colombres founded the Argentine industry.

1828. Dumont devised the charcoal filter.

1830. Van den Bosch instituted the cultural system in Java. Native population caused to grow cane to be delivered to privately owned factories, which in turn delivered the product to the Government at stipulated prices. The delivery of cane substituted for the corvée or system of enforced labour, a form of slavery.

Beets first grown in the United States.

Dombasle experimented with the diffusion of beets.

1832. The vacuum pan first used in the raw sugar industry at Vreed-en-Hoop in Demerara, and also in Louisiana.

1834. The abolition of slavery within the British Empire. The results of this economic upheaval were the revival of the moribund beet sugar industry in Europe, and the failure of the British Colonial industry, since free-grown sugar competed with but small protection against slave-grown, the conscience of the Manchester school of economists not extending to their pockets. The British Colonial industry cannot, however, be absolved from the charge of wasteful and antiquated methods.

1835. Sugar first manufactured in Hawaii.

1836. The vacuum pan first used in Java.

1837. Penzoldt invented the centrifugal.

1838. First coolie immigration to Demerara.
Beet sugar first manufactured in the United States by Childs at Northampton, Mass.

1839. Saccharates of the alkaline earths examined by Peligot and Soubeiran.

1840 (circa). Experimental work on the cane conducted in India.

1840. Robinson's patent on imbibition.
Degrand's system of steam utilization at work in Cuba.

1846. Rillieux's second patent on multiple effect evaporation, followed by the adoption of the process in Louisiana, Cuba, Peru and Mexico.

1848. The special import duty on slave-grown sugar abolished in Great Britain.
Abolition of slavery in the French colonies.

1849. Melsens established the use of sulphur in the manufacture of direct process white sugar.

1850. The bounty system operating in Europe led to the export and sale of sugar in open markets below its cost of production. Extension, as a natural consequence, of the British jam and biscuit trade, and failure of the refining industry.
The cane introduced into Natal.
Gonzalves established the cultivation of the purple cane in Java.
Ismail Pascha restored the Egyptian industry.
Howard invented an hydraulic pressure regulator for cane mills.
The "Zeitschrift des Vereins der deutschen Zuckerindustrie" (the first journal devoted exclusively to the sugar trade) first published.

1850 (circa). Bouscaren experimented with diffusion in Guadeloupe.

1852. Bessemer invented the suspended centrifugal.

1853. The centrifugal first used in Java.

1858. The fertility of the cane recognised in Barbados.

1859. Establishment of the double carbonation process in the beet sugar industry.

1860. Van der Wych proposed the establishment of experiment stations in Java.

1862. Scheibler introduced the elution process.

1863. Slavery abolished in the Dutch colonies.
Slavery abolished in the United States.

1866. Robert established the diffusion process for the beet.
Kanakas introduced as labourers to Australia.
The publication of Reynoso's treatise had a great influence in Java.

1867. Weston established the use of the suspended centrifugal.

1869. "The Sugar Cane" first published.

1870 (circa). The American beet sugar industry established by Dyer and by Spreckels.

1871. Stewart's U.K. patent on hydraulic pressure regulation for cane mills.

1872. McDonald's U.S. patent on hydraulic pressure regulation for cane mills.

1873. Slavery abolished in Porto Rico.

1875. Reciprocity treaty between Hawaii and the United States.

1876. The carbonation process first used in the cane sugar industry.

1880. Slavery abolished in Cuba. The resulting economic disturbance controlled by Ibanez, who extended the colono system.

1880 (circa). Green bagasse successfully burnt in Hawaii and in the British West Indies. Beginning of the diffusion era. Multiple effect evaporation became general. Organized agricultural experiment work conducted by Bonâme in Guadeloupe.

1881. Inception of the Sugar Trust in the United States.

1882. Scheibler used strontia to desaccharify molasses.

1883. Steffen perfected the lime substitution process.

1884. The sugar crisis, as a result of the bounty system.

1885. Experiment station at Audubon Park, Louisiana, founded.

1886. The Java "Proefstations" founded. Beginning of research period here and elsewhere. (Bonâme, Stubbs, Harrison, Went, Kobus, Geerligs, Maxwell, Barber, *et al.*)

The London Conference, called by Lord Salisbury, inoperative due to the attitude of the Cobden school of economists.

1888. Abolition of slavery in Brazil.

Re-discovery of the fertility of the cane (Soltwedel); 1889 (Harrison and Bovell).

1889. The fight between Claus Spreckels and the Sugar Trust.

1892. The first nine-roller unit-driven mill operated.

1893. The Java "Archief" first published.

1895. Inception of the Formosan industry after the Chino-Japanese War.

Experiment Station of the Hawaiian Sugar Planters' Association started.

1896. End of the cultural system in Java.

1897. The Dingley tariff in the United States placed countervailing duties on bounty-produced sugar.

1898. Hawaii annexed to the United States.

The Spanish-American War. Subsequent great extension of the sugar industry in Cuba and Porto Rico.

The Brussels Conference.

The fight between the Sugar Trust and the independent refiners—the Doscher and Arbuckle interests.

1899. The British Indian Government imposed countervailing duties on bounty-produced sugar.

1902. End of the bounty system.

1905. The Sugar Factors Co., of Hawaii, antagonistic to the Trust, organised.

1906. Kanakas deported from Australia.

1913. The first electrically operated mill at Amistad, in Cuba.

1914. The Great War. Enormous development of the cane sugar industry, especially in Cuba.

ADDENDUM TO CHAPTER IV.

Paunda Canes.—In the body of Chapter IV the term "Paunda" is used as applying in India to thick tropical canes exotic with regard to that country. This is the sense in which "Paunda" is used in many official Indian publications, but further treatment is necessary, and particularly with regard to one particular cane to which the term "Paunda" or "Pundya" is specifically applied.

The earliest reference to this name and type of cane is in Ibu-i-Batuta's "Safar-Namal," a work written in the 13th century. In this he eulogizes the Paunda cane of the Malabar coast, "the like of which is not found anywhere in India." A second Oriental writer, Sabhan Rai, ih his work, "Khulasater-'t-Tawarikh," of date 1695, also mentions Paunda canes as growing in Oudh and near Lucknow, and this reference evidently refers to thick canes, of which he mentions two, a white and a black.

In the Deccan of India, a locality adjacent to the Malabar Coast, there is now extensively grown a cane called Pundya (= Paunda), which has been specifically associated with the district for a very long time, and, as there employed, the term does not seem to be used as equivalent to exotic; this cane may reasonably be connected with that cane referred to by Ibu-i-Batuta and later by Sabhan Rai.

This cane (or possibly a group of closely allied canes), which the writer cannot call to mind ever having seen in any other part of the world, may be described as of the best South Pacific type, green when young, yellow when ripe, of erect habit, with joints 1·5 to 2 inches in diameter, and of length of joint up to a maximum of 4–5 inches. The joints are cylindrical to distinctly barrel-shaped, and have a tendency to split. The wax covering is fairly thick. The eyes are large, in longitudinal section, best described as a triangle standing on a semicircle, and in older joints they have a tendency to grow away from the stalk. The most distinct characteristic is the presence on many joints of longitudinal brown streaks, as if inscribed with a fine pen. The fibre content is 10–11 per cent., the juice is very pure and sweet, and the cane tillers well. It is known to afford a red and yellow sport. The presumed presence of this cane in India at so early a time as the 13th century is hard to explain in view of the tendency to regard canes of this type as exotic to India. It may have been brought by some early Hindu or Malay mariner.

In many early references to the Otaheite and/or Bourbon cane there appears the statement that this cane is supposed to have come originally from the Malabar Coast. While the Pundya cane of the Deccan is most certainly distinct from the Otaheite cane, it yet bears enough general resemblance thereto to account for the rise of this supposition, and the geographical positions of Mauritius and the Malabar Coast are such that this cane could easily have travelled to that island and have become confounded with the real Otaheite.

In the Deccan, in Marathi, the word " Pundya " means " overgrown " and hence thick ; a second Marathi word, " Pandhra," means " white " ; and this second derivation of the term " Paunda " is that favoured by Sir George Watt in his " Dictionary of the Economic Products of India."

For much of the above information I am indebted to Mr. J. B. Knight, Principal of the Poona Agricultural College.

Cane Introductions.—After the introduction of the Otaheite cane to India from Mauritius by Sleeman in 1824, it became extensively cultivated ; it is on record that about 1857 it became suddenly attacked by a disease, since when its extended cultivation in India has ceased.

From India this cane travelled to Burma, about 1840, and it here remains in extended cultivation, being known as Otaheite and as Toungoo Yellow, from the district where mostly grown. In this case the pedigree is fully known :—Otaheite to Mauritius by Bougainville (1782), Mauritius to India by Sleeman (1827), India to Burma (1840). As seen by the writer on the large scale at Zewaddia, it was at once recognizable as typical Otaheite, though no taxonomic analysis was attempted. The stock now extant in Burma should, then, serve to fix the original Otaheite type, as other introductions here tending to make for confusion do not seem to be on record.

From sources not available when the manuscript of this book was prepared, it appears that the original Mauritius industry was founded on stock imported from Madagascar at the end of the 17th century, and that again, about 1800, Madagascar canes were imported to Mauritius. The names of these canes were all distinguished by the prefix Fary-, but none seems to have become established.

The planters of Mauritius in times past have always been most active in introducing canes from other districts, and a full account of these introductions will be found in de Sornay's " La canne à Sucre à l'Ile Maurice," which was published very shortly before this work was issued. Conversely it may also be put on record that Mauritius has formed the distributing centre whence many other districts have obtained their supplies of varieties.

Quoting from de Sornay, the following amplifications and corrections may be made to the subject matter of Chapter IV :—

The Tanna cane as the striped variety reached Mauritius in 1870, its native name being Wopandon.

In 1874 a Dutch astronomer, Soethers by name, who had come to Bourbon to observe the transit of Venus, introduced a cane to which his name became attached in Mauritius. Dating from Kruger's " Das Zuckerrohr " (1899), the name of a cane known in Java as " Loethers " has been supposed to be a misspelling of " Louzier," and no inconsiderable confusion has arisen on this account, the Java " Loethers " being sometimes taken as being the Mauritius " Louzier," whereas it is actually a different cane. The short descriptions available of Soethers and Loethers tally, and a misreading of " S " for " L " explains the whole confusion.

MUNSON AND WALKER'S TABLE FOR DETERMINING GLUCOSE, INVERT SUGAR ALONE, AND INVERT SUGAR IN THE PRESENCE OF SUCROSE (0·4 GRAM AND 2 GRAMS TOTAL SUGAR).

Copper (Cu).	Dextrose (*d*-glucose).	Invert sugar.	Invert sugar and sucrose.		Copper (Cu).	Dextrose (*d*-glucose).	Invert sugar.	Invert sugar and sucrose.	
			0.4 gram total sugar.	2 grams total sugar.				0.4 gram total sugar.	2 gram total sugar.
mgs.	mgs.	mgs.	mgs.	mgs.	mgs.	mgs.	mgs.	mgs.	mgs.
8·9	4·0	4·5	1·6	....	44·4	21·3	22·3	19·7	13·4
9·8	4·5	5·0	2·1	....	45·3	21·7	22·8	20·2	13·9
10·7	4·9	5·4	2·5	....	46·2	22·2	23·2	20·7	14·3
11·5	5·3	5·8	3·0	....	47·1	22·6	23·7	21·1	14·8
12·4	5·7	6·3	3·4	....	48·0	23·0	24·1	21·6	15·2
13·3	6·2	6·7	3·9	....	48·9	23·5	24·6	22·0	15·7
14·2	6·6	7·2	4·3	....	49·7	23·9	25·0	22·5	16·2
15·1	7·0	7·6	4·8	....	50·6	24·3	25·5	22·9	16·6
16·0	7·5	8·1	5·2	....	51·5	24·8	25·9	23·4	17·1
16·9	7·9	8·5	5·7	....	52·4	25·2	26·4	23·9	17·5
17·8	8·3	8·9	6·1	....	53·3	25·6	26·8	24·3	18·0
18·7	8·7	9·4	6·6	....	54·2	26·1	27·3	24·8	18·5
19·5	9·2	9·8	7·0	....	55·1	26·5	27·7	25·2	18·9
20·4	9·6	10·3	7·5	....	56·0	27·0	28·2	25·7	19·4
21·3	10·0	10·7	7·9	....	56·8	27·4	28·6	26·2	19·8
22·2	10·5	11·2	8·4	....	57·7	27·8	29·1	26·6	20·3
23·1	10·9	11·6	8·8	....	58·6	28·3	29·5	27·1	20·8
24·0	11·3	12·0	9·3	....	59·5	28·7	30·0	27·5	21·2
24·9	11·8	12·5	9·7	....	60·4	29·2	30·4	28·0	21·7
25·8	12·2	12·9	10·2	....	61·3	29·6	30·9	28·5	22·2
26·6	12·6	13·4	10·7	4·3	62·2	30·0	31·3	28·9	22·6
27·5	13·1	13·8	11·1	4·7	63·1	30·5	31·8	29·4	23·1
28·4	13·5	14·3	11·6	5·2	64·0	30·9	32·3	29·8	23·5
29·3	13·9	14·7	12·0	5·6	64·8	31·4	32·7	30·3	24·0
30·2	14·3	15·2	12·5	6·1	65·7	31·8	33·2	30·8	24·5
31·1	14·8	15·6	12·9	6·5	66·6	32·3	33·6	31·2	24·9
32·0	15·2	16·1	13·4	7·0	67·5	32·7	34·1	31·7	25·4
32·9	15·6	16·5	13·8	7·4	68·4	33·1	34·5	32·1	25·9
33·8	16·1	16·9	14·3	7·9	69·3	33·6	35·0	32·6	26·3
34·6	16·5	17·4	14·7	8·4	70·2	34·0	35·4	33·1	26·8
35·5	16·9	17·8	15·2	8·8	71·1	34·4	35·9	33·5	27·3
36·4	17·4	18·3	15·6	9·3	71·9	34·9	36·3	34·0	27·7
37·3	17·8	18·7	16·1	9·7	72·8	35·3	36·8	34·5	28·2
38·2	18·2	19·2	16·6	10·2	73·7	35·8	37·3	34·9	28·6
39·1	18·7	19·6	17·0	10·7	74·6	36·2	37·7	35·4	29·1
40·0	19·1	20·1	17·5	11·1	75·5	36·7	38·2	35·8	29·6
40·9	19·6	20·5	17·9	11·6	76·4	37·1	38·6	36·3	30·0
41·7	20·0	21·0	18·4	12·0	77·3	37·5	39·1	36·8	30·5
42·6	20·4	21·4	18·8	12·5	78·2	38·0	39·5	37·2	31·0
43·5	20·9	21·9	19·3	12·9	79·1	38·4	40·0	37·7	31·4

Copper (Cu).	Dextrose (*d*-glucose)	Invert sugar.	Invert sugar and sucrose.		Copper (Cu).	Dextrose (*d*-glucose)	Invert sugar.	Invert sugar and sucrose	
			0.4 gram total sugar	2 grams total sugar.				0.4 gram total sugar.	2 grams total sugar.
mgs.	mgs.	mgs.	mgs.	mgs.	mgs.	mgs.	mgs.	mgs.	mgs.
79·9	38·9	40·4	38·2	31·9	115·5	56·8	58·9	56·9	50·7
80·8	39·3	40·9	38·6	32·4	116·4	57·2	59·4	57·4	51·2
81·7	39·8	41·4	39·1	32·8	117·3	57·7	59·8	57·8	51·7
82·6	40·2	41·8	39·6	33·3	118·1	58·1	60·3	58·3	52·1
83·5	40·6	42·3	40·0	33·8	119·0	58·6	60·8	58·8	52·6
84·4	41·1	42·7	40·5	34·2	119·9	59·0	61·2	59·3	53·1
85·3	41·5	43·2	41·0	34·7	120·8	59·5	61·7	59·7	53·6
86·2	42·0	43·7	41·4	35·2	121·7	60·0	62·2	60·2	54·0
87·1	42·4	44·1	41·9	35·6	122·6	60·4	62·6	60·7	54·5
87·9	42·9	44·6	42·4	36·1	123·5	60·9	63·1	61·2	55·0
88·8	43·3	45·0	42·8	36·6	124·4	61·3	63·6	61·6	55·5
89·7	43·8	45·5	43·3	37·0	125·2	61·8	64·0	62·1	55·9
90·6	44·2	46·0	43·8	37·5	126·1	62·2	64·5	62·6	56·4
91·5	44·7	46·4	44·2	38·0	127·0	62·7	65·0	63·1	56·9
92·4	45·1	46·9	44·7	38·5	127·9	63·1	65·4	63·5	57·4
93·3	45·5	47·3	45·2	38·9	128·8	63·6	65·9	64·0	57·8
94·2	46·0	47·8	45·6	39·4	129·7	64·0	66·4	64·5	58·3
95·0	46·4	48·3	46·1	39·9	130·6	64·5	66·9	65·0	58·8
95·9	46·9	48·7	46·6	40·3	131·5	65·0	67·3	65·4	59·3
96·8	47·3	49·2	47·0	40·8	132·4	65·4	67·8	65·9	59·7
97·7	47·8	49·6	47·5	41·3	133·2	65·9	68·3	66·4	60·2
98·6	48·2	50·1	48·0	41·7	134·1	66·3	68·7	66·9	60·7
99·5	48·7	50·6	48·4	42·2	135·0	66·8	69·2	67·3	61·2
100·4	49·1	51·0	48·9	42·7	135·9	67·2	69·7	67·8	61·7
101·3	49·6	51·5	49·4	43·2	136·8	67·7	70·1	68·3	62·1
102·2	50·0	51·9	49·8	43·6	137·7	68·2	70·6	68·8	62·6
103·0	50·5	52·4	50·3	44·1	138·6	68·6	71·1	69·2	63·1
103·9	50·9	52·9	50·8	44·6	139·5	69·1	71·6	69·7	63·6
104·8	51·4	53·3	51·2	45·0	140·3	69·5	72·0	70·2	64·1
105·7	51·8	53·8	51·7	45·5	141·2	70·0	72·5	70·7	64·5
106·6	52·3	54·3	52·2	46·0	142·1	70·4	73·0	71·2	65·0
107·5	52·7	54·7	52·7	46·5	143·0	70·9	73·4	71·6	65·5
108·4	53·2	55·2	53·1	46·9	143·9	71·4	73·9	72·1	66·0
109·3	53·6	55·7	53·6	47·4	144·8	71·8	74·4	72·6	66·5
110·1	54·1	56·1	54·1	47·9	145·7	72·3	74·9	73·1	66·9
111·0	54·5	56·6	54·5	48·3	146·6	72·8	75·3	73·6	67·4
111·9	55·0	57·0	55·0	48·8	147·5	73·2	75·8	74·0	67·9
112·8	55·4	57·5	55·5	49·3	148·3	73·7	76·3	74·5	68·4
113·7	55·9	58·0	55·9	49·8	149·2	74·1	76·8	75·0	68·9
114·6	56·3	58·4	56·4	50·2	150·1	74·6	77·2	75·5	69·3

Copper (Cu).	Dextrose (*d*-glucose).	Invert sugar.	Invert sugar and sucrose.		Copper (Cu).	Dextrose (*d*-glucose).	Invert sugar.	Invert sugar and sucrose.	
			0.4 gram total sugar.	2 grams total sugar.				0.4 gram total sugar.	2 grams total sugar.
mgs.	mgs.	mgs.	mgs.	mgs.	mgs.	mgs.	mgs.	mgs.	mgs.
151·0	75·1	77·7	76·0	69·8	186·5	93·7	96·9	95·4	89·2
151·9	75·5	78·2	76·4	70·3	187·4	94·2	97·4	95·8	89·7
152·8	76·0	78·7	76·9	70·8	188·3	94·6	97·8	96·3	90·2
153·7	76·4	79·1	77·4	71·3	189·2	95·1	98·3	96·8	90·7
154·6	76·9	79·6	77·9	71·7	190·1	95·6	98·8	97·3	91·2
155·5	77·4	80·1	78·4	72·2	191·0	96·1	99·3	97·8	91·7
156·3	77·8	80·6	78·8	72·7	191·9	96·5	99·8	98·3	92·2
157·2	78·3	81·0	79·3	73·2	192·8	97·0	100·3	98·8	92·7
158·1	78·8	81·5	79·8	73·7	193·6	97·5	100·8	99·3	93·2
159·0	79·2	82·0	80·3	74·2	194·5	98·0	101·2	99·8	93·7
159·9	79·7	82·5	80·8	74·6	195·4	98·4	101·7	100·3	94·2
160·8	80·1	82·9	81·3	75·1	196·3	98·9	102·2	100·9	94·7
161·7	80·6	83·4	81·7	75·6	197·2	99·4	102·7	101·2	95·1
162·6	81·1	83·9	82·2	76·1	198·1	99·9	103·2	101·7	95·6
163·4	81·5	84·4	82·7	76·6	199·0	100·3	103·7	102·2	96·1
164·3	82·0	84·9	83·2	77·1	199·9	100·8	104·2	102·7	96·6
165·2	82·5	85·3	83·7	77·6	200·7	101·3	104·6	103·2	97·1
166·1	82·9	85·8	84·2	78·0	201·6	101·8	105·1	103·7	97·6
167·0	83·4	86·3	84·6	78·5	202·5	102·2	105·6	104·2	98·1
167·9	83·9	86·8	85·1	79·0	203·4	102·7	106·1	104·7	98·6
168·8	84·3	87·2	85·6	79·5	204·3	103·2	106·6	105·2	99·1
169·7	84·8	87·7	86·1	80·0	205·2	103·7	107·1	105·7	99·6
170·5	85·3	88·2	86·6	80·5	206·1	104·1	107·6	106·2	100·1
171·4	85·7	88·7	87·1	81·0	207·0	104·6	108·1	106·7	100·6
172·3	86·2	89·2	87·6	81·4	207·9	105·1	108·6	107·2	101·1
173·2	86·7	89·6	88·0	81·9	208·7	105·6	109·1	107·7	101·6
174·1	87·1	90·1	88·5	82·4	209·6	106·0	109·5	108·2	102·1
175·0	87·6	90·6	89·0	82·9	210·5	106·5	110·0	108·7	102.6
175·9	88·1	91·1	89·5	83·4	211·4	107·0	110·5	109·2	103·1
176·8	88·5	91·6	90·0	83·9	212·3	107·5	111·0	109·6	103·5
177·7	89·0	92·0	90·5	84·4	213·2	108·0	111·5	110·1	104·0
178·5	89·5	92·5	91·0	84·8	214·1	108·4	112·0	110·6	104·5
179·4	89·9	93·0	91·4	85·3	215·0	108·9	112·5	111·1	105·0
180·3	90·4	93·5	91·9	85·8	215·8	109·4	113·0	111·6	105·5
181·2	90·9	94·0	92·4	86·3	216·7	109·9	113·5	112·1	106·0
182·1	91·4	94·5	92·9	86·8	217·6	110·4	114·0	112·6	106·5
183·0	91·8	94·9	93·4	87·3	218·5	110·8	114·5	113·1	107 0
183·9	92·3	95·4	93·9	87·8	219·4	111·3	115·0	113·6	107 5
184·8	92 8	95·9	94·4	88·3	220·3	111·8	115·4	114·1	108
185·6	93·2	96·4	94·9	88·8	221·1	112·3	115·9	114·6	10

Copper (Cu).	Dextrose (*d*-glucose).	Invert sugar.	Invert sugar and sucrose.		Copper (Cu).	Dextrose (*d*-glucose).	Invert sugar.	Invert sugar and sucrose.	
			0.4 gram total sugar.	2 grams total sugar.				0.4 gram total sugar.	2 grams total sugar.
mgs.	mgs.	mgs.	mgs.	mgs.	mgs.	mgs.	mgs.	mgs.	mgs.
222·1	112·8	116·4	115·1	109·0	257·6	132·3	136·4	135·3	129·2
223·0	113·2	116·9	115·6	109·5	258·5	132·7	136·9	135·8	129·7
223·8	113·7	117·4	116·1	110·0	259·4	133·2	137·4	136·3	130·2
224·7	114·2	117·9	116·6	110·5	260·3	133·7	137·9	136·8	130·7
225·6	114·7	118·4	117·1	111·0	261·2	134·2	138·4	137·3	131·2
226·5	115·2	118·9	117·6	111·5	262·0	134·7	138·9	137·8	131·7
227·4	115·7	119·4	118·1	112·0	262·9	135·2	139·4	138·3	132·2
228·3	116·1	119·9	118·6	112·5	263·8	135·7	140·0	138·8	132·7
229·2	116·6	120·4	119·1	113·0	264·7	136·2	140·5	139·4	133·2
230·1	117·1	120·9	119·6	113·5	265·6	136·7	141·0	139·9	133·7
231·0	117·6	121·4	120·1	114·0	266·5	137·2	141·5	140·4	134 2
231·8	118·1	121·9	120·6	114·5	267·4	137·7	142·0	140·9	134·8
232·7	118·6	122·4	121·1	115·0	268·3	138·2	142·5	141·4	135 3
233·6	119·0	122·9	121·6	115·5	269·1	138·7	143·0	141·9	135 8
234·5	119·5	123·4	122·1	116·0	270·0	139·2	143·5	142·4	136·3
235·4	120·0	123·9	122·6	116·5	270·9	139·7	144·0	142·9	136·8
236·3	120·5	124·4	123·1	117·0	271·8	140·2	144·5	143·4	137·3
237·2	121·0	124·9	123·6	117·5	272·7	140·7	145·0	144·0	137·8
238·1	121·5	125·4	124·1	118·0	273·6	141·2	145·5	144·5	138·3
238·9	122·0	125·9	124·6	118·5	274·5	141·7	146·1	145·0	138·8
239·8	122·5	126·4	125·1	119·0	275·4	142·2	146·6	145·5	139·4
240·7	122·9	126·9	125·6	119·5	276·3	142·7	147·1	146·0	139·9
241·6	123·4	127·4	126·2	120·0	277·1	143·2	147·6	146·5	140·4
242·5	123·9	127·9	126·7	120·6	278·0	143·7	148·1	147·0	140·9
243·4	124·4	128·4	127·2	121·1	278·9	144·2	148·6	147·6	141·4
244·3	124·9	128·9	127·7	121·6	279·8	144·7	149 1	148·1	141·9
245·2	125·4	129·4	128·2	122·1	280·7	145·2	149·6	148·6	142·4
246·1	125·9	129·9	128·7	122·6	281·6	145·7	150·1	149·1	143·0
246·9	126·4	130·4	129·2	123·1	282·5	146·2	150·7	149·6	143·5
247·8	126·9	130·9	129·7	123·6	283·4	146·7	151·2	150·1	144·0
248·7	127·3	131·4	130·2	124·1	284·2	147·2	151·7	150·7	144·5
249·6	127·8	131·9	130·7	124·6	285·1	147·7	152·2	151·2	145·0
250·5	128·3	132·4	131·2	125·1	286·0	148·2	152·7	151·7	145·5
251·4	128·8	132·9	131·7	125·6	286·9	148·7	153·2	152·2	146·0
252·3	129·3	133·4	132·2	126·1	287·8	149·2	153·7	152·7	146·6
253·2	129·8	133·9	132·7	126·6	288·7	149·7	154·3	153·2	147·1
254·0	130·3	134·4	133·2	127·1	289·6	150·2	154·8	153·8	147·6
254·9	130·8	134·9	133·7	127·6	290·5	150·7	155·3	154·3	148·1
255·8	131·3	135·4	134·3	128·1	291·4	151·2	155·8	154·8	148·6
256·7	131·8	135·9	134·8	128·6	292·2	151·7	156·3	155·3	149·1

Copper (Cu).	Dextrose (*d*-glucose).	Invert sugar.	Invert sugar and sucrose.		Copper (Cu).	Dextrose (*d*-glucose).	Invert sugar.	Invert sugar and sucrose.	
			0.4 gram total sugar.	2 grams total sugar.				0.4 gram total sugar.	2 grams total sugar.
mgs.	mgs.	mgs.	mgs.	mgs.	mgs.	mgs.	mgs.	mgs.	mgs.
293·1	152·2	156·8	155·8	149·7	328·7	172·7	177·7	176·8	170·6
294·0	152·7	157·3	156·4	150·2	329·5	173·2	178·3	177·4	171·1
294·9	153·2	157·9	156·9	150·7	330·4	173·7	178·8	177·9	171·6
295·8	153·7	158·4	157·4	151·2	331·3	174·2	179·3	178·4	172·2
296·7	154·2	158·9	157·9	151·7	332·2	174·7	179·8	179·0	172·7
297·6	154·7	159·4	158·4	152·3	333·1	175·3	180·4	179·5	173·2
298·5	155·2	159·9	159·0	152·8	334·0	175·8	180·9	180·0	173·7
299·3	155·8	160·5	159·5	153·3	334·9	176·3	181·4	180·6	174·3
300·2	156·3	161·0	160·0	153·8	335·8	176·8	182·0	181·1	174·8
301·1	156·8	161·5	160·5	154·3	336·7	177·3	182·5	181·6	175·3
302·0	157·3	162·0	161·0	154·8	337·5	177·9	183·0	182·1	175·9
302·9	157·8	162·5	161·6	155·4	338·4	178·4	183·6	182·7	176·4
303·8	158·3	163·1	162·1	155·9	339·3	178·9	184·1	183·2	176·9
304·7	158·8	163·6	162·6	156·4	340·2	179·4	184·6	183·8	177·5
305·6	159·3	164·1	163·1	156·9	341·1	180·0	185·2	184·3	178·0
306·5	159·8	164·6	163·7	157·5	342·0	180·5	185·7	184·8	178·5
307·3	160·3	165·1	164·2	158·0	342·9	181·0	186·2	185·4	179·1
308·2	160·8	165·7	164·7	158·5	343·8	181·5	186·8	185·9	179·6
309·1	161·4	166·2	165·2	159·0	344·6	182·0	187·3	186·4	180·1
310·0	161·9	166·7	165·7	159·5	345·5	182·6	187·8	187·0	180·6
310·9	162·4	167·2	166·3	160·1	346·4	183·1	188·4	187·5	181·2
311·8	162·9	167·7	166·8	160·6	347·3	183·6	188·9	188·0	181·7
312·7	163·4	168·3	167·3	161·1	348·2	184·1	189·4	188·6	182·3
313·6	163·9	168·8	167·8	161·6	349·1	184·7	190·0	189·1	182·8
314·4	164·4	169·3	168·4	162·2	350·0	185·2	190·5	189·7	183·3
315·3	164·9	169·8	168·9	162·7	350·9	185·7	191·0	190·2	183·9
316·2	165·4	170·4	169·4	163·2	351·8	186·2	191·6	190·7	184·4
317·1	166·0	170·9	170·0	163·7	352·6	186·8	192·1	191·3	184·9
318·0	166·5	171·4	170·5	164·3	353·5	187·3	192·7	191·8	185·5
318·9	167·0	171·9	171·0	164·8	354·4	187·8	193·2	192·3	186·0
319·8	167·5	172·5	171·5	165·3	355·3	188·4	193·7	192·9	186·5
320·7	168·0	173·0	172·1	165·8	356·2	188·9	194·3	193·4	187·1
321·6	168·5	173·5	172·6	166·4	357·1	189·4	194·8	194·0	187·6
322·4	169·0	174·0	173·1	166·9	358·0	189·9	195·4	194·5	188·1
323·3	169·6	174·6	173·7	167·4	358·9	190·5	195·9	195·0	188·7
324·2	170·1	175·1	174·2	167·9	359·7	191·0	196·4	195·6	189·2
325·1	170·6	175·6	174·7	168·5	360·6	191·5	197·0	196·1	189·8
326·0	171·1	176·1	175·2	169·0	361·5	192·1	197·5	196·7	190·3
326·9	171·6	176·7	175·8	169·5	362·4	192·6	198·1	197·2	190·8
327·8	172·1	177·2	176·3	170·0	363·3	193·1	198·6	197·7	191·4

Copper (Cu).	Dextrose (*d*-glucose).	Invert sugar.	Invert sugar and sucrose.		Copper (Cu).	Dextrose (*d*-glucose).	Invert sugar.	Invert sugar and sucrose.	
			0.4 gram total sugar.	2 grams total sugar.				0.4 gram total sugar.	2 grams total sugar.
mgs.	mgs.	mgs.	mgs.	mgs.	mgs.	mgs.	mgs.	mgs.	mgs.
364·2	193·7	199·1	198·3	191·9	399·7	215·2	221·1	220·2	213·7
365·1	194·2	199·7	198·8	192·5	400·6	215·8	221·6	220·8	214·3
366·0	194·7	200·2	199·4	193·0	401·5	216·3	222·2	221·4	214·8
366·0	195·2	200·8	199·9	193·5	402·4	216·9	222·8	221·9	215·4
367·7	195·8	201·3	200·5	194·1	403·3	217·4	223·3	222·5	215·9
368·6	196·3	201·8	201·0	194·6	404·2	218·0	223·9	223·0	216·5
369·5	196·8	202·4	201·6	195·2	405·1	218·5	224·4	223·6	217·0
370·4	197·4	202·9	202·1	195·7	405·9	219·1	225·0	224·1	217·6
371·3	197·9	203·5	202·6	196·2	406·8	219·6	225·5	224·7	218·1
372·2	198·4	204·0	203·2	196·8	407·7	220·2	226·1	225·3	218·7
373·1	199·0	204·6	203·7	197·3	408·6	220·7	226·7	225·8	219·2
374·0	199·5	205·1	204·3	197·9	409·5	221·3	227·2	226·4	219·8
374·8	200·1	205·7	204·8	198·4	410·4	221·8	227·8	226·9	220·3
375·7	200·6	206·2	205·4	198·9	411·3	222·4	228·3	227·5	220·9
376·6	201·1	206·7	205·9	199·5	412·2	222·9	228·9	228·1	221·4
377·5	201·7	207·3	206·5	200·0	413·0	223·5	229·5	228·6	222·0
378·4	202·2	207·8	207·0	200·6	413·9	224·0	230·0	229·2	222·5
379·3	202·8	208·4	207·6	201·1	414·8	224·6	230·6	229·7	223·1
380·2	203·3	208·9	208·1	201·7	415·7	225·1	231·2	230·3	223·7
381·1	203·8	209·5	208·7	202·2	416·6	225·7	231·7	230·9	224·2
382·0	204·4	210·0	209·2	202·7	417·5	226·2	232·3	231·4	224·8
382·8	204·9	210·6	209·8	203·3	418·4	226·8	232·8	232·0	225·3
383·7	205·5	211·1	210·3	203·8	419·3	227·4	233·4	232·5	225·9
384·6	206·0	211·7	210·9	204·4	420·2	227·9	234·0	233·1	226·4
385·5	206·5	212·2	211·4	204·9	421·0	228·5	234·5	233·7	227·0
386·4	207·1	212·8	212·0	205·5	421·9	229·0	235·1	234·2	227·6
387·3	207·6	213·3	212·5	206·0	422·8	229·6	235·7	234·8	228·1
388·2	208·2	213·9	213·1	206·6	423·7	230·1	236·2	235·4	228·7
389·1	208·7	214·4	213·6	207·1	424·6	230·7	236·8	235·9	229·2
390·0	209·2	215·0	214·2	207·7	425·5	231·3	237·4	236·5	229·8
390·8	209·8	215·5	214·7	208·2	426·4	231·8	237·9	237·1	230·3
391·7	210·3	216·1	215·3	208·8	427·3	232·4	238·5	237·6	230·9
392·6	210·9	216·6	215·8	209·3	428·1	232·9	239·1	238·2	231·5
393·5	211·4	217·2	216·4	209·9	429·0	233·5	239·6	238·8	232·0
394·4	212·0	217·8	216·9	210·4	429·9	234·1	240·2	239·3	232·6
395·3	212·5	218·3	217·5	211·0	430·8	234·6	240·8	239·9	233·2
396·2	213·1	218·9	218·0	211·5	431·7	235·2	241·4	240·5	233·7
397·1	213·6	219·4	218·6	212·1	432·6	235·7	241·9	241·0	234·3
397·9	214·1	220·0	219·1	212·6	433·5	236·3	242·5	241·6	234·8
398·8	214·7	220·5	219·7	213·2	434·4	236·9	243·1	242·2	235·4
					435·3	237·4	243·6	242·7	236·0

INDEX

GENERAL INDEX

PAGE

Abel Furnace 464
Absolute Juice 551
— Solids 490
Acetic Acid as Sugar Precipitant... 451
— — Fermentation 565
— — in the Cane 17
Acidity, Determination of 526
Acid Thin-Juice Process 291
Acids, Their Action on Sugar 260
— Inversion of Sugar by 261
— Organic, of the Cane 17
Aconitic Acid in Cane 17
Aerial Ropeways 178
Air, Volume of, removed by Pumps 367
Aitken and Mackie's Roll Grooving 231
Alcoholometer, Beck's 583
Alcoholometry 583
Aldose Sugars, Determination of 540
Alkalies, Action on Reducing Sugars 265
Alkalinity, Definition of 259
— Determination of 526
Alumina Cream, Use as Defecant, 272, 294, 508
Alundum Crucible 534
American Assortment 429
Amides of the Cane 16
Ammonia as Manure 80, 89, 94
Analyses, Number necessary in Control 560
Analysis of Bagasse 500, 511, 524
— of Cane 500, 512, 524
— of Filter Press Cake 511
— of Juice 500, 510
— of Limestone and Lime 527
— of Massecuites, Molasses 500, 510
— of Sugar 499, 502
— of Wash 585
— of Waste Waters 515
Analytical Processes :—
  Andrlik-Stanek 518
  Apjohn 523
  Clerget 516
  Creydt 524
  Deerr 506, 508, 512, 551

PAGE

Analytical Processes (*continued*).
  Degener-Lunge 529
  Double Neutral Polarization... 518, 519
  Dupont 514
  Electrolytic 535
  Fehling 532
  Geerligs 514, 528
  Herles 509
  Heron 509
  Herzfeld 517, 518
  Herzfeld and Lenart 540
  Horne 507
  Hudson 521
  Iodometric 536
  Jackson and Gillis 517
  Java Experiment Station 511
  Kjeldahl 520
  Ling 538
  Molisch 515
  Muller 522
  Munson and Walker 533
  Norris 511
  Ogilvie 520
  O'Sullivan 520
  Pellet 506, 518, 527
  Pellet and Lemeland 521
  Permanganate 536
  Pinoff 515
  Pieraert 524
  Romijn 540
  Sachs 506
  Saillard 518
  Scheibler 506
  Soldaini 540
  Steuerwald 517
  Sundstrom 528
  Tervooren 518
  Tolman 517
  Vivien 513, 526
  Walker 517
  Wiechmann 507
  Winter 541
  Wortmann 524
  Zamaron 509, 512

PAGE
Andesite Soils 64
Animal Charcoal for Clarification ... 509
— — Use of in Analysis 509
Anthocyan 18
Argentina, Harvest Time in 28
— Rainfall in 23
Army Worm 150
Arrack.................................. 568
Arrowing of Cane...................... 135
Asexual Variation 42
Ash, Determination of 525
— of Cane 16, 93
— of Molasses 453, 525
— of Sugars 431, 525
Asparagine 16
Aspergillus Moulds 435, 565
Asrymusry's Process 575
Assay of Alcohol 585
— Ash 525
— Cane Sugar 502, 515-524
— Crystal Sugar 513
— Fibre 524
— Fructose 540
— Glucose 532-541
— Gums 526
— Reducing Sugars 532-541
— Water 499
Assortment, American................. 429
— Channel 429
— European 429
Attenuation 585
Available Sugar 493, 556

Bacher's Sampler........................ 548
Bacteria in Distillery 570
— in Soil 66
— in Sugar House 434
Bagasse, Analysis of.................... 511
— Ash of, as Manure 101
— Boiler Trials with 459
— Carriers for 213, 467
— Combustion of 459
— Composition of 454
— Compression of.................. 232
— Determination of Fibre in ... 524
— Determination of Sugar in ... 511
— Determination of Water in ... 500
— Dryer for 470
— Drying of 470
— Firing of.......................... 466
— Fuel Value of 470
— Furnaces for 464
— Heating Surface Data 459
— Heat of Combustion............ 455

PAGE
Bagasse, Physical Properties of 463
— Products of Combustion of... 455
— Results obtained in Combustion of 459
— Sampling of 549
— Stoking of 466
— Steam Available from 457
— Steam Value of 462
— Temperature of Combustion 456
— Thermal Value of 458
— Volume occupied by 462
Baldwin's Weigher 542
Ball Bearings for Centrifugals......... 414
Barbados, Harvest Time in............ 28
— Manurial Experiments in...... 82
— Rainfall of 22
— Seedling Canes of 38
Bareto's Sampler 548
Barrel Syrup 444
Baryta as Defecant 295
Basic Lead Acetate, Action of, on Reducing Sugars 507
— — Acetate, Action of, on Sugar 506
— — Acetate, Preparation of 509
— — Nitrate, Preparation of 509
Basic Slag as Manure 95
Bates' Polarimeter 485, 487
Bath Maceration 249
Battelle Process 282
Beck Scale 583
Bergman's Theory of the Trash Turner 203
Bermuda Grass 139
Betaine in Cane 16
Black Alkali 67
— Strap 444
Blankit 294
Bligh's Introduction of Canes 48
Blood, Dried, as Manure 94
Bock's Process of Crystallization ... 392
Boiler Horse Power necessary......... 468
Boilers, Choice of 467
— Fire-Tube 468
— Heating Surface of 459
— Heat Transfer in 460
— Trials of.......................... 459
— Water-Tube 468
Boiling, Algebraical Theory of 383
— House, Control of 556
— in Molasses 385
— Points, Definition of............ 308
— Points of Sugar Solutions 309, 388
— Sugar, Technique of 386

PAGE
Boivin and Loiseau's Sucro-Carbonate Process 449
Bonavist Bean as Green Manure 97
Bordeaux Mixture 172
Bouricius, Seedling Canes of 39
Bovell, Seedling Canes of 38
Brasmoscope 389
Brewster's Law of Polarized Light 474
British Guiana, Cultivation in 132
— — Harvest Time in 28
— — Irrigation in 110
— — Manurial Experiments in 79
— — Rainfall in 21
— — Rum Making in 568
— — Soils of 70
— — Yeasts of 565
British Thermal Unit 310
Brix Degree, Definition of 490
— — Determination of 389, 493
Brixometer 496
— Application of 390
Butyric Acid Fermentation 566

Calcium Hypochlorite, Preparation of 509
Calorie 310
Cane, Abnormalities in 139
— Absorption of Plant Food by 88
— Acids of 17
— After-ripening of 182
— Agricultural Balance Sheet of 99
— Amides of 16
— Analysis 500, 512, 524
— Arrowing of 135
— Ash of 16, 87, 93
— Ash in Relation to Manuring 93
— Botanical Position of 41
— Carriers for 181
— Chemical Selection of 43
— Classification of 44
— Climate suited for 24, 29
— Colouring Matter of 18, 258
— Composition of 12
— Control of Weight of 542
— Cost of Irrigation 115
— Cross-Fertilization of 34
— Cultivation of, in British Guiana 132
— Cultivation of, in Cuba 133
— Cultivation of, in Hawaii 132
— Cultivation of, in Java 134
— Cultivation of, in Louisiana 132
— Cultivation, Reynoso System 130
— Cultivation, Zayas' System 134

PAGE
Cane Cutters 175
— Cutting Back of 135
— Cutting of 175
— Degenerescence of 154
— Deterioration of Cut 182
— Determination of Sugar in 512
— Determination of Weight 542
— Diseases (*see* Diseases of the Cane)
— Distribution of Sugar in 14
— Effect of Climate on 24
— Effect of Manuring on 92
— Effect of Sunshine on 27
— Effect of Temperature on 25
— Effect of Wind on 24, 28
— Enzymes of 18
— Eye of 2
— Experiments on Manuring 79
— Fertility of 32
— Fertilization of 34
— Fibre of 15, 187, 192
— Fibre, Compression of 187
— Fibre, Determination of 524
— Fibre, Heat of Combustion of 455
— Fibre, Percentage of 15
— Flower of 10
— Flowering of 135
— Fluming of 180
— Formation of Sugar in 12
— Gums of 17
— Harvesting of 175
— Harvest, Time of 28
— Inheritance in 35
— Insects affecting (*see* Insects).
— Internodes of 2
— Introduction of 40
— Irrigation of, in British Guiana 110
— Irrigation of, in Cuba 108
— Irrigation of, in Egypt 110
— Irrigation of, in Hawaii 108
— Irrigation of, in Java 111
— Irrigation of, in Mauritius 110
— Irrigation of, in Peru 110
— Juice (*see* Juice).
— Leaf of 4
— Leaf, Function of 7
— Leaf, Physiology of 7
— Leaf, Structure of 5
— Lecithins of 16
— Loading of 176
— Lodging of 135
— Mills (*see* Mills).
— Nitrogenous Bodies of 16
— Nomenclature of 46
— Nodes of 2

PAGE
Cane Pests (*see* Pests).
— Pollen of 11
— Practice of manuring 85
— Range of 19
— Ratoonage of 136
— Reducing Sugars of 15
— Rind of 3
— Ripening of 136
— Root of 7
— Roots, Function of 10
— Roots, Structure of 13
— Roots, Structure of 9
— Sampling of 550
— Seedlings (*see* Seedlings).
— Seed, Quantity required 130
— Seed, Source of 131
— Sexual Variation in 32
— Sports of 31
— Soils suited for 68
— Stalk of 1
— Stalk, Function of 4
— Stalk, Physiology of 4
— Stalk, Quantity of Sugar in 12
— Stalk, Structure of 3
— Straw, Fuel Value of 471
— Sugar, Determination of 502-529
— Tannins of 18
— Transport of 177
— Trashing of 134
— Tying Up of 135
— Unloading 181
— Variation in 31
— Varieties (*see* Varieties of Cane)
— Wax in the 17
Caramel 574
— Analysis of 576
— Asrymusry's Process for 575
— Manufacture of 575
— Tests for 575
Carbonation, Apparatus used in 283
— Chemistry of 280
— Development of 280
— Double 282
— Results obtained in 287
— Single 281
— Tanks for 283
— *v.* Defecation 287
Carrier, Bagasse 213, 467
— Cane 181
Cartier Scale 583
Cassonade Sugar 428
Cattle Food 452
Centrifugal, Acceleration in 416

PAGE
Centrifugal, Alliott 408
— Basket 412
— Bessemer's 409
— Brooman 408
— Buffers 409, 413
— Cottle's 412
— Cycle of Operations in 414
— Development of 408
— Hardman's 408
— Hepworth's 411
— Lafferty's 412
— Load on 417
— Nind's 409
— Patterson's 425
— Penzoldt's 408
— Rotch's 408
— Scrapers 413
— Screen, Holes in 412
— Screens 412
— Separation 279
— Seyrig's 408
— Tolhurst's 412
— Weston's 409
Centrifugals, Ball Bearings for 414
— Belt-driven 410, 415, 416
— Capacity of 422
— Continuous 427
— Cycle of Operations in 414
— Discharger for 413
— Electric-driven 416
— Friction-driven 408
— Methods of Driving 415
— Number required 422
— Power used in 418
— Self-discharging 413
— Speed of 418
— Spindles for 413
— Stresses in 417
— Suspended 409
— Under-driven 408
— Water-driven 416
Channel Assortment 429
Chapman's Syphons 347
Chimeras 139
Chini Sugar 428
Chlorosis 169
Choline in Soils 16
Citric Acid in Soils 17
Clarification (*see* Defecation).
Classification of Canes 44
— of Molasses 424
Clayed Sugar 428
Clerget Process, Concentration Effect 518
— — Herzfeld's Modification 517, 518

PAGE
Clerget Process, Jackson and Gillis' Modification 519
— — Methods of Inversion in, 517, 519, 521
— — Saillard's Modification ... 518
— — Sources of Error in 518
— — Temperature Effect in ... 516
— — Walker's 517, 518
Climate of Cane Growing Districts ... 20
— Continental 21
— Effect of, on Cane 24
— Equatorial 20
— Marine 21
— Varieties and 29
Coco Grass 139
Coefficient of Transmission 317
Coffey Still 579
Coleothrix Methystes 574
Colouring Matter of Cane............... 18
— — of Cane Juice......... 258, 280
Combustion Chambers.................. 464
— — Volume of 469
— of Bagasse (*see under* Bagasse).
— Spontaneous, of Molasses...... 566
Compensation 481
Compensator in Polarimetry 481
Concentration, Effect of, on Rotation 504
Concrete Sugar........................... 428
Condensation, Central 362
Condensed Water Evacuation in Evaporators 347
Condensers, Air in........................ 367
— Barometric 358
— Central 362
— Co-Current 359, 361
— Counter-Current 359, 360
— Cross-Current 359
— Dimensions of 362
— Dry 358, 360
— High Level 358
— Low Level 358
— Parallel Current 359
— Piping for 361
— Torricellian 358
— Water required for 361
— Wet 358, 360
Conductivity of Heat in Evaporation 312
Continuous Settlers 275
Constitutional Water from Milling... 551
Continuous Stills 579
Control Analyses, Interpretation of 555
— Observation Tube 488
— of Added Water in Milling ... 551
— of Boiling House 556

PAGE
Control of Cane Weights 542
— of Diseases 170
— of Distilleries 582
— of Entrainment 371, 560
— of Insect Pests 146, 151
— of Milling Plant.................. 551
— of the Factory 542
— of Sugar Boiling 559
— of Weight of Juice 542
Conveyors, Sugar 426
Cooling Towers 370
Copper Determination by Reduction in Alcohol 535
— — by Reduction in Hydrogen 535
— — as Cuprous Oxide 535
— — by Electrolytic Deposition 535
— — by Iodometric Process ... 536
— — by Permanganate Process 536
Corliss Engine, Steam consumed in 330
Cotton Seed Cake 94
Coupling Boxes in Mills 215
Cow Peas as Green Manure 96
Creydt's Process 524
Critical Positions 476
Crop Time in Various Countries...... 28
Crops, Rotation of 103
Cross-Fertilization 34
Crucibles 534
Crushers, Hungerford's 230
— Thomson and Black's 230
— Krajewski's 230
— Marshall's 230
— Searby's 231
Crystal Sugar, Determination of...... 513
Crystallization, Addition of Water in 403
— Control of 393
— Development of 392
— Java Process of 393
— Low Products of 404
— Rapidity of Cooling and 403
— Size of Pan and 396
— Theory of 402
Crystallization-in-Motion: Bock's Process 392
— Rate of Cooling in.............. 403
— Size of Crystal in 403
— Steffen's Process 392
— Technique of 402
— Theory of 392
— Wulff's Process 392
Crystallizers, Calculation of Capacity of.................................. 404
— Huch's 404
— Ragout and Tourneur's 404

PAGE
Crystallizers, Water-cooled 404
Crystallizing Tanks 404
Cuba, Cane Yield of 138
— Cultivation in 133
— Harvest Time in 28
— Irrigation in 108
— Soils of 71
— Sugar Content of Cane in 13
— Yeast of 565
Cultivation in British Guiana 126, 132
— in Cuba 128, 133
— in Hawaii 128, 132
— in Java 129, 134
— in Louisiana 128, 132
— in Mauritius 129
Cultivator, The 122
Cuprous Oxide, Filtration of 533
Curin's Apparatus 389
Cutting back of Cane 135
— in Sugar Boiling 386
— of Cane 175
Cyanamide 94

Danek Filters 301
Dark Crystals 429
Davoll Sampler 547
Deerr's Evaporator 354
— Indicator 232
— Macerator 249
Defecation, Agents used in 270, 299
— Continuous 275
— Action of Lime in 271
— Methods of 272
Defecator, Capacity required 274
— Colonial Sugar Co.'s 276
— Corne and Burguières 276
— Hatton's 278
— Pickering and McGregor's 275
— Williamson 278
Degree, Balling 490
— Brix 490, 493
— Vivien 490
De Haan's Process 282
Demerara Crystals 429
Density, Automatic Record of 546
— Determination of 493
Derosne Double Effect 341
Deterioration of Cut Cane 182
— of Sugar 434
— Prevention of Sugar 436
Diamond Filter Flask 534
Diffusion Apparatus 252
— Cell 253

PAGE
Diffusion, Development of 251
— Milling compared with 252
— of Dried Cane 255
Diseases of the Cane :—
Acid Rot 158
Ananas 161
Bacillus Glangæ 168
,, Pseudarabinus 168
,, Sacchari 168
,, Vascularum 159
Black Rot 161
,, Smut 159
,, Spot 156
Brown Spot 157
Cane Wilt 161
Cephalosporium Sacchari 161
Cercospora Acerosum 156
,, Kopkei 155
,, Longipes 157
,, Sacchari 156, 161
,, Vaginæ 156
Chlorosis 169
Coleroa Sacchari 157
Colletotrichum Falcatum 160, 164
Coniothyrium Melasporum 164
Cytospora Sacchari 165, 166
Darluca Melasporum 164
Diplodia Cacaoicola 165, 166
Eriosphæria Sacchari 157
Eye Spot 156
Gnomonia Iliau 162
Gumming 159
Hendersonina Sacchari 161
Himantia Stellifera 163
Hypochrea Sacchari 168
Iliau 162
Leaf and Leaf-Sheath 155
— Splitting 158
Leptosphæria Sacchari 157
Maladie de la Gomme 159
Marasmius Sacchari 162
,, Stenophyllus 163
Melanconium Sacchari 164, 166
,, Saccharinum 166
Mosaic 154, 169
Mottling 169
Mycosphærella Striatiformans 158
Nectria Laurentiana 165, 167
Odontia Saccharicola 163
Pathological 167
Pine Apple 161
Pseudomonas Vascularum 159
Puccinia Kühnii 158
Red Rot 154, 157

PAGE

Diseases of the Cane (*continued*).
  Red Rot of Stem 160
  Red Spot 157
  Red Striping 168
  Rind Fungus 164
  Ring Spot 157
  Root Fungus 162
  Rust 145, 155, 158
  Sclerotium Rolfsii 157
  Schizophyllum Alneum 163
  Sereh 167
  Spæronæma Adiposum 161
  Stem 159
  Strumella Sacchari 164
  Thielaviopsis Ethaceticus 161
  Thyridaria Tarda 166
  Top Rot 164
  Trichosphæria Sacchari 164
  Ustilago Sacchari 159
  Wither Tip 158
  Yellow Spot 155
  Yellow Stripe 155, 169
Distillation, Control of 582
  — Practice of 576
Distilleries, Grain, Processes used in 570
  — Molasses 576
  — Control, Analyses required 585
  — Control of 582
Dorr Clarifier 276
Doubling in Sugar Boiling 386
Droughts 23
Dry Determination 499
  — Substance, Definition of 490
Dubrunfaut's Saccharate Process 449, 450
Dulce Sugar 429
Dupont Process 514
Dutch Standard 428

Earth Nut as Green Manure 97
Eckart, Manurial Experiments of 83
Effront's Process 570
Egypt, Climate of 21
  — Harvest Time in 28
  — Irrigation in 110
  — Manuring Practice in 85
  — Soils of 72
Ejectors in Evaporation 360
Electrical Processes in Sulphitation 295
Elution Processes 449
Entrainment, Causes of 371
  — Prevention of 371
  — Sugar Losses in 372, 560
Enzymes of Cane 18
  — Inversion by 262

PAGE

Equatorial Rainbelt 21
European Assortment 429
Evaporation, Apparatus used in 342
  — Development of Practice of 340
  — Film 340, 342, 353
  — Progressive 345
  — Rate of, as influenced by Temperature 325
  — Determination of Rate of 325
  — Rate of, in Pans 397
  — Steam Pressure Influence on Rate of 325, 327
  — Vacuum Influence on Rate of 326
Evaporators, Capacity of 338
  — Chapman's 345
  — Circulation in 344
  — Condensed Water Evacuation in 347
  — Condensers for 357
  — Deerr's 357
  — Efficiency of 317
  — Film 341, 342
  — Greiner 401
  — Horizontal Submerged Tube 351
  — Incondensible Gases, Evacuation of, in 367
  — Juice Distribution in 345
  — Kestner's 352
  — Lillie's 351
  — Loss of Heat from 337
  — Oscillating 341
  — Pauly-Greiner 328
  — Pre-Evaporators for 328
  — Rillieux-Lexa 328
  — Rohrig and Koenig's 345
  — Sandborn's 357
  — Scale in 373
  — Standard 343
  — Steam consumed in 331
  — Steam Distribution in 343
  — Stillman's 353
  — Submerged Tube 351
  — Swenson's 350
  — Temperature Difference in 311
  — Temperature Difference, Distribution of, in 321
  — Tubes, Size of, in 344
  — Vertical Tube 343
  — Vivien and Dujardin's 343
  — Welner-Jelinek 351
  — Wetzel's 402
  — Witcowitz' 353
  — Yaryan's 351
Exterior Conductibility 314

PAGE

Extraction, Economic Limit of 238, 243
Extraordinary Ray 474, 476
Eye of the Cane 2

Fall in Purity 385
False Grain 387, 421
Faulty Rum 574
Faure Shredder 230
Fehling's Solution 532
Feints 582
Fermentation, Alcoholic 582
— Butyric 566
— Foaming, of Massecuites 566
— Lactic 565
— Nitric, of Molasses 566
— Spontaneous, of Cane Juice 566
— Spontaneous, of Molasses 566
— Viscous 566
Ferrocyanides as Defecants 295
Fertility of Cane, Discovery of 33
Fertilization of Cane 34
Fibre, Assay of 512
— Quantity of, in Cane 15
— Composition of 15, 454
— Compression of 187, 191
— Determination of 524
— Fuel Value of 470
Film Evaporation 345, 351, 353
Filter Flasks 533, 534
Filter-Press Cake, Analysis of 511
— — Composition of 307
— — Loss of Sugar in 307
— — Manurial Value of 101
— — Sampling of 548
Filters, Bag 302
— Bagasse 305
— Capacity of 306
— Chamber 302
— Danek 301
— Kelly 304
— Leaf 304, 307
— Manipulation of 305
— Sand 301, 305
— Soxhlet 302
— Plate and Frame 302
— Stocking 302
— Sweetland 304
— Wire Gauze 305
Filtration, Development of 301
— Double 306
— Media used in 300
— Practice of 301
— Principles of 300
First Sugar and Molasses Process 393

PAGE

Flash Ports 364
Flash Pots 348
Flower of the Cane 10
Flue Gases, Volume of 456
Flumes 180
Fluorides in Distilleries 570
Footing in Sugar Boiling 386
Forced Draught in Bagasse Furnaces 466
Fore-Boiler 328
Forking Banks in Demerara 117, 132
Formosa, Rainfall in 23
Fructose, Action of Lead Salts on 540
— Determination of 540
— Glucose Ratio 537
— Optical Assay of 540
— Rotation of 540
Fuel, Bagasse as 454
— Cane Straw as 471
— Molasses as 453, 471
Fuels, Heat Values of 455, 459
Fungus Attacks on Heavily Manured Canes 92
Furnaces, Abel's 464
— Check Walls in 464
— Combustion Chambers of 464
— Cook's 465
— Cuban 465
— Flat Grate 465
— Forced Draught in 466
— Grate Area of 459
— Hawaiian 464
— Javan 464
— Marie's 464

Gases dissolved by Water 368
— Incondensible 344
Gas Washer 283
Gay-Lussac Scale 583
Gearing of Mills 213
Geerligs-Hamakers Process 255
Geerligs' Theory of Molasses 446
Gendar Scale 583
Glucose, Action of Alkalies on 265
— Action of Heat on 265
— Action of Lead Salts on 537
— Determination 532-540
— Determination as Copper 535
— Determination by Permanganate 536
— Determination Electrolytically 535
— Determination Iodometrically 536
— to Non-sugar Ratio 537
— Rotation of 502
Glutamine 16

PAGE
Glutose ... 567
Glycocoll in Cane ... 16
Gooch Crucible ... 534
Granulation, Methods of obtaining 386
Grasses as Pests ... 139
Grass Worm ... 142, 150
Grate, Forced Draught ... 466
— Flat ... 465, 466
— Hollow ... 465
— Step ... 466, 467
Gravity Purity ... 493
— Purity Polarization ... 493
— Solids ... 490
— Solids, Effect of Dilution on 491
Gregg Unloader ... 182
Grooving of Rollers ... 231
Guanine ... 16
Guano ... 94
Guildive ... 571
Gumming Fermentation ... 566
Gums, Determination of ... 526
Gur ... 428
Gypsum ... 95

Hairs on Cane Leaf ... 5
Half-Shadow Angle ... 477
— Devices, Adjustable ... 485
— Devices in Polarimetry ... 477
Hares as Pests ... 140
Harrison on British Guiana Soils ... 70
— on Seedling Canes ... 35
Harrows ... 122
Harvesting of Cane ... 175
— Selective ... 136
— Time of Cane ... 28
Hawaii, Canes of ... 61
— Composition of Cane in ... 12
— Climate of ... 22
— Harvest Time in ... 28
— Irrigation in ... 108
— Manurial Experiments in ... 83
— Preparation of Land in ... 128
— Soils of ... 73
— Yield of Cane in ... 137
Heat, Action of, on Cane Juice ... 257
— Consumption of, in Factories 330
— Definition of ... 310
— Latent ... 310
— Losses in Evaporators ... 337
— Losses in Flue Gases ... 456
— Losses in Steam Pipes ... 337
— Specific ... 310
— Transference of ... 310
— Unit of ... 310

PAGE
Heaters for Juices ... 273
— Steam consumed in ... 331
Heating Surface, Distribution of ... 317
— Surfaces of Boilers ... 460
— Surfaces of Evaporators 317, 343
— Surface of Vacuum Pans ... 397
Heavy Metals as Defecants ... 295, 509
Hedemann Weigher ... 542
Hodek Ralentisseur ... 371
Hoes ... 117
Hoofdsuiker ... 429
Horse Power required in Milling ... 194
Horsin-Déon Indicator ... 545
Howard's Finings ... 294
Huillard Dryer ... 470
Hyatt Cane Reducer ... 513
Hybridization ... 34
Hydraulic Regulators ... 211
Hydrofluoric Acid in Distilleries ... 570
Hydrometers ... 494
— Principle of ... 495
Hydrosulphites for Sulphitation ... 293
Hyperparasitization ... 149

Imbibition, Practice of ... 247
— Theory of ... 238
Implements for Cultivation ... 117
Inactive Bodies, Effect of, on Polarization ... 505
Incondensible Gases ... 344
India, Canes of ... 59
— Climate of ... 21
— Irrigation in ... 111
— Rotations in ... 105
— Soils of ... 71
Indicators for Mills ... 232
Indigo as Green Manure ... 96
Inheritance in Canes ... 35
Insect Epidemics ... 145
Insecticides ... 152
Insects attacking the Cane :—
Acarid ... 145
Anerastia Albutella ... 141
Anomala Sp. ... 143, 146
Ants ... 145
Aphanisticus Krugeri ... 144
Aphids ... 144
Aphis Sacchari ... 144
Apogonia Destructor ... 143
Army Worm ... 142
Asciracids ... 144
Beetles ... 140, 143
Blast ... 144
Borers ... 141, 142

PAGE

Insects attacking the Cane (*continued*).
- Budworm 143
- Cane Fly 144
- Castnia Licus 141, 146
- Chilo Auricilia 141
- ,, Infuscatellus 141
- ,, Simplex 141
- Cirphis Unipuncta 142
- Coccids 144
- Coleopterous 143
- Crickets 144
- Dactylopius 144
- Delphax Saccharivora 144
- Diaprepes Abbreviatus 143
- Diatræa Saccharalis 141
- Diatræa Striatalis 141
- Dicranotropis Vastatrix 144
- Frog Hoppers 144
- Grapholitha Schistaceana 141
- Gryllotalpa Africana 145
- Hardbacks 143
- Hemipterous 144
- Hispella Sacchari 144
- Holanaria Pisescens 144
- Hoppers, Frog 144
- Hoppers, Leaf 144
- Icerya Seychellarum 144
- Lachnosterna 143
- Leaf-eating 142
- Leaf Hopper 144
- Leaf Miner 144
- Leaf Roller 143
- Lepidiota Albohirta 143
- Lepidopterous 141, 143
- Leucania Unipuncta 142
- Lice 144
- Ligyrus Rugiceps 143
- May Beetles 143
- Mealy Bugs 144
- Metamarsius Hemipterus 144
- Microlepidopterous 143
- Moth Borers 141, 146
- Nonagria Uniformis 141
- Omoides Accepta 143
- Oregma Lanigera 144
- Orthopterous 144
- Parasitization of 146
- Perkinsiellia Saccharicida 144, 146
- Phytalus Smithi 143, 146
- Polyocha Saccharella 141
- Pou-à-poche Blanche 144
- Prepodes 143
- Proceras Saccharifagus 142
- Rhabdocnemis Obscurus 143

PAGE

Insects attacking the Cane (*continued*).
- Rhyncotous 144
- Scapteriscus Didactylus 144, 146
- Scirpophaga Auriflua 141
- ,, Chrysorrhœa 141
- ,, Intacta 141
- ,, Monostigma 141
- Sesamia Nonagrioides 141
- Sipha Flava 144
- Sphenophorus Obscurus 148
- Sphenophorus Sericeus 144
- Spittle Fly 144
- Tarsonymus Bankroftii 145
- Termes Taprobanes 145
- Thrips 145
- Tineids 143
- Tomaspis Posticata 144
- Trechocorys Calceolariæ 144
- Weevil Borer 143

Interference Devices 480
Internodes of Cane 2
Inversion 260
Inversion by Acids 260
- — by Acid Salts 262
- — by Enzymes 262
- — by Yeast 520
- — in Cut Cane 182
- — in Juices 263
- — Losses 560

Invertase, Preparation of 521
Irrigation, Cost of 115
- — Practice of, in Cuba 108
- — Practice of, in Demerara 110
- — Practice of, in Egypt 110
- — Practice of, in Hawaii 108
- — Practice of, in India 111
- — Practice of, in Java 111
- — Practice of, in Mauritius 110
- — Practice of, in Peru 110
- — Quantity of Water used in 112

Jackals, as Cane Pests 140
Jack Beans 97
Jaggery 428
Java Canes 52, 55
- — Climate of 21
- — Cultivation in 129, 134
- — Harvest Time in 28
- — Irrigation in 111
- — Land Tenure in 129
- — Manurial Experiments in 84
- — Manurial Practice in 85
- — Rainfall in 21
- — Rotations in 104

PAGE

Java, Rum Manufacture in 569
— Seedling Canes of 39
— Soils of 75
— Yeasts of 565
Joints of the Cane 2
Juice, Acidity and Alkalinity in 258
— Action of Heat on 257
— Action of Lime on 266
— Action of Sulphur on 290
— Analysis of 510
— Carbonation of 280
— Clarification (*see* Defecation)
— Colloids of 257
— Colouring Matters of 258, 280
— Determination of Weight of 542
— Distribution in Evaporators 344
— Fate of Lime in Contact with 266
— Filtration of 299
— Heaters 273
— Measurement of 544
— Rings 201
— Sampling of 547
— Settling of 270
— Strainers 213, 300
— Theory of Extraction of 232, 238
— Weighing of 542

Kassner's Lead Saccharate Process 450
Ketose Sugars, Determination of 540
Kieselguhr for Filtration 300
King Bolts in Mills 202
Knife, Revolving, for preparing Cane 229
Knorr Filter Tube 539
Knot Grass as Cane Pest 139
Kobus on Seedling Canes 39

Laccase in Cane 18
Lactic Acid Bacteria 570
Lactic Acid Fermentation 565
Lala in Hawaii 131
Lamps for Polarimeters 485
Land, Preparation of, for Planting 124
— Tenure in Java 129
Langen's Apparatus 546
Lantana Camara as Cane Pest 140
Latent Heat 310
Laterites 66
Lead Acetate, Use of, in Analysis 507, 509
— Precipitate, Error due to 506
— Precipitate, Volume of 506
— Saccharate Process 448, 450
— Salts, Action of on Reducing Sugars 507
— Salts, Errors due to Use in Analysis 506

PAGE

Leaf of Cane, Function of 7
— of Cane, Mineral Matter in 12
— of Cane, Physiology of 7
— of Cane, Structure of 5
Lecithins in Cane 16
Lees as Manure 100
— Determination of Alcohol in 585
Leguminous Crops 95
Leinert Meter 544
Leuconostoc Mesenteroides 566
Light, Monochromatic 476
— Nature of 474
— Polarization of 474
— Source of in Polarimetry 485
— White 476
Lime, Action of, on Juice 266
— Analysis of 527
— Burning of 284
— Choice of 286
— Fate of, in Cane Juice 266
— Quantity required in Defecation 271
— Manurial Action of 91
Lime-Magnesia Ratio 91
Lime Kilns 284
— — Belgian 284
— — Action of 285
— — Capacity of 285
— — Fuel required for 285
— — Kern 284
— — Rotary 284
Limestone, Analysis of 286, 527
Limy Soils 69
Litmus as Indicator 259
Loading of Cane 176
Loew's Lime-Magnesia Hypothesis 91
Long Ratoons, 137
Loss of Weight in Cut Cane 182
Louisiana, Climate of, 23, 25, 29
— Cultivation in 128
— Green Manuring in 96
— Harvest Time in 28
— Manuring in 85
— Rainfall of 23
— Rotations in 104
— Soils of 76
Low Sugars, Handling of 423
— Sugars, Suppression of 393
— Wines 578, 582
Lupines as Green Manure 97

Maceration (*see* Imbibition).
Magnesia, Determination of, in Limestone 528
Malic Acid in Cane 17

PAGE
Mammals attacking Cane 140
Manure, Ammonia as 89, 94
— Application of 86
— Bagasse Ash as 101
— Basic Slag as 95
— Blood as 94
— Bones as 95
— Cyanamide as 94
— Filter Press Cake as 101
— Fish Scrap as.................... 94
— Green 95
— Gypsum as 95
— Kainit as 95
— Lees as 100
— Lime as 91
— Molasses as 101
— Nitrate of Lime as 94
— Nitrate of Potash as 94
— Nitrate of Soda as.............. 94
— Pen 98
— Phosphates as 90, 95
— Plant Residues as 99
— Potash as 95
— Seed Cake as 94
— Specific Effect of 92
— Superphosphates as 95
— Tankage as 94
Manures, Distinction between Nitrogenous 89
Manurial Experiments in Barbados 82
— Experiments in British Guiana 79
— Experiments in Hawaii 83
— Experiments in Java 84
— Practice in Egypt 85
— Practice in Hawaii 85
— Practice in Java 85
— Practice in Louisiana 85
— Practice in Mauritius 85
Manuring, Ash of Cane in Relation to 93
— Effect of, on Composition of Cane 92
Marguerittes' Precipitation Process 451
Massecuite, Analysis of.................. 510
— Calculation of Quantity produced 394
— Determination of Density ... 497
— Drainage of 407
— Sampling of 561
— Transport of 407
Mauritius, Canes of 41, 51, 56, 57, 60
— Climate of 22
— Cultivation in 129
— Distillery Practice in........... 568
— Green Manuring in 96

PAGE
Mauritius, Harvest Time in 28
— Irrigation in 110
— Manurial Practice in............ 85
— Yeast of 565
Mechanical Tillage 118
Megass (*see* Bagasse).
Mercuric Nitrate, Preparation of...... 509
— Salts as Defecants............... 509
Messchaert Grooves 231
Micro-Organisms in Soil 106
Mill, Aitken's 202
— Allan's 200
— Alliott and Paton's 200
— Bartlett's 200
— Bolk's 201
— Boyer's 200
— Buchanan's 199, 200
— Chapman's 202
— Collinge's 198
— Deacon's 227
— De Mornay's 228
— Delbert's 200
— Fisher's 207
— Fletcher's 200
— Fogarty's 201
— Guy's 227
— Hall's 201
— Hamilton's 200
— Hatton's 200
— Hedemann's 201
— Hughes' 227
— Le Blanc's 227
— McNeil's 200, 202
— McOnie's 202
— Payen's 228
— Robertson & Hudson's 227
— Robinson's 227
— Rollers, Construction of 201
— Rollers, Grooving of 231
— Rollers, Setting of............... 223
— Rollers, Speed of 226
— Rousselot's 199
— Skekel's 200
— Stillman's 202
Milling, Algebraical Analysis of 232
— Extraction Economics of 238, 243
— Preparation of Cane for 228
— Trains 217
Mills, Actual Pressure in 221
— Capacity of....................... 218
— Control of 232
— Development of 197
— East Indian 197
— Electric Drive for 217

PAGE
Mills, Four-Roller 227
— Gearing for 213
— Housing of 202
— Motive Power for 215
— Multiple-Roller 227
— Performances of 247
— Power required for 191, 194
— Scrapers for 213
— Settings of 223
— Stresses in 219
— Two-Roller 228
— Three-Roller 197
Mohr-Westphal Balance 494
Molascuit, Manufacture of 452
— Food Value of 452
Molasses, Alcohol from 453
— Analysis of 445
— as Source of Alcohol 567
— Claassen's Observation on 448
— Classification of 424
— Combustion of 471
— Composition of 445
— Definition of 444
— Disposal of 451
— Extraction of Sugar from 448
— Feeds, Analyses of 452
— Formation of 444
— Fuel Value of 471
— Geerligs' Theory of 446
— Influence of Reducing Sugars on Composition of 446
— Return of 392
— Sampling of 561
— Williams' Observation on 447
Monsoons 21
"Mother" Plantations in Java 131
Mouldboard Ploughs 120
Moulding 132
Moulds 565
Mulches, Paper 135
Multiple Effect Evaporation, Conception of 315
— Effects, Actual Conditions in 321
— Effects, Computation of Conditions in 319
— Effects, Water actually evaporated 323
— Jet Ejector 360
Mungoose as Pest 149
Munro Crucible 534
Muscovado 428, 429
Mymarids as Parasites 148, 151

Naphthol, *a*- 515

PAGE
Napier's Formula 346
Natal, Harvest Time in 28
— Yeasts of 565
Natural Balance in Epidemics 147
— Methods of Control 146, 153
Naudet Process of Diffusion 255
New Guinea, Canes of 61
Nicol Prism 474
Nicols, Parallel and Crossed 475
Nitrate of Potash as Manure 94
— of Soda as Manure 94
Nitric Fermentation 566
Nitrification in Soils 90
Nitrites in Soil 106
Nitrobacter in Soil 106
Nitrogenous Bodies in Cane 16
Nitrosococcus in Soil 106
Nitrosomonas in Soil 106
Nodes of Cane 2
Nomenclature of Cane Varieties (*see* Varieties of Cane)
Nomenclature of Sugar 428
Norit as Defecant 296
Normal Juice 551
— Weights 502
— Weight, French 502
— Weight, German 503
— Weight, International 503

Objectionable Nitrogen in Cane 16
Obscuration 583
Off-Barring 132
Oilseed Cakes as Manure 94
Optical Activity 474
— Constants of Sugars 502
Ordinary Ray 474
Osmogene 450
Osmosis 450
Oven, Sulphur 92
— Vacuum 500-501

Pacific Island Canes 48
Padas Soil 75
Pan (*see* Vacuum Pan).
Panela 429
Panicum Sp. Weeds 139
Pans, Steam consumed in 331
Paper Mulches 135
Parasites 150
— Chalcidid 151
— Chalcid 148, 150
— of Asciracids 151
— of Beetle Borers 151
— of Borers 150

PAGE
Parasites of Grass Worms 150
— of Hoppers 147, 151
— of Leaf Hoppers 148, 151
— Scolid 148, 150
— Tachinid 151
Parasitization 146
Patjol Hoe 117
Péclet's Equation for Heat Transference 312
Pellet Sampler 547
Pen Manure 98
Penicillium Moulds in Distillery 565
— Moulds in Raw Sugar 434
Peroxidase in Cane 18
Peru, Climate of 21, 23
— Harvest Time in 28
— Irrigation in 110
— Soils of 76
— Yeasts of 565
— Yield of Cane in 138
Pests, Mammalian 140
Petrie Process, Thomas and 279
Philippine Mats 429
Philippines, Climate of 24
— Rainfall in 23
— Soils of 77
Phosphates as Defectants 294
— as Manure 90
Pied-de-Cuite 386
Pigeon Peas 96
Pigs as Cane Pests 140
Plane of Polarization, Rotation of ... 473
— Polarized Light, Means of obtaining 474
Planting in Cuba 128
— in Demerara 126
— in Hawaii 128
— in Java 129
— in Louisiana 128
— in Mauritius 129
— Seed Cane 130
Plant Residues as Manure 99
Plough Systems 118
Ploughs, Benicia-Horner 122
— Deep-tilling 123
— Disc 121
— Gang 120
— Knife 122
— Motor 118
— Mould-Board 120
— Spaulding 123
— Steam 118
— Turn 120
Pois d'Achery as Green Manure 96

PAGE
Pois Muscat as Green Manure 96
Poiseuille's Law for Molasses Drainage 420
Poisons for Pests 151
Polarimeter, Adjustment of 485
— Bates' 485
— Biot's 474, 484
— Compensation in 481
— Control Tube for 488
— Critical Position in 476
— Cornu's 478, 484
— Duboscq and Duboscq's ... 481, 484
— Half-Shadow Devices 477
— Horsin-Déon's 479
— Jellett's 477, 484
— Lamps for 485
— Laurent's 478, 484
— Light Colours for 477
— Lippich's 479, 485
— Mitscherlich's 484
— Penumbra Devices 477
— Poynting's 479
— Robiquet's 484
— Soleil-Duboscq 484
— Soleil-Ventzke-Scheibler ... 477, 484
— Trannin's 484
— Transition Tint 477
— Tripartite Field 479
— Tubes for 486, 487
— Scales of 487
— Wild's 481, 484
Polariscope, Savart's 480
— Senarmont's 481
Polarized Light 473
Polarization, Definition of 473
— Gravity Purity 493
— Methods of obtaining 510
— Preparation of Materials for ... 508
— Refractive Purity 493
Pollen of Cane 11
Polyphenols in Cane 18
Potash as Manure 95
— in Soils 67
— Recovery of, from Molasses ... 471
— Removal of, from Juices 295
Power Units, Steam consumed in ... 330
Pre-Evaporator 328
Première Sirop 429
Presscake, Analysis of 511
— Composition of 101, 307
Pressure Regulators 210
Prism of Nicol 474
Prisms, Cornu 478
— Feurstner 475
— Glan 475

PAGE
Prisms, Glazebrook 475
— Hartnack-Prasmowshi 475
— Jellett 477
— Laurent 478
— Lippich 475, 479
— Schmidt and Haensch 478
— Soleil 475
— Thompson 475
Processes, Manufacturing :—
Acid Thin-Juice 289
Asrymusry's 575
Bach's 291
Battelle 282
De Haan 282
Geerligs-Hamakers 255
Margueritte 451
Naudet 255
Perichon 255
Scheibler 449
Separation 450
Steffen 449
Substitution 449
Three-Massecuite 394
Two-Massecuite 393
Proof Spirit 583
Pumping, Cost of, in Hawaii 108
Pump, Alberger 365
— Blancke 365
— Capacity of 369
— Carbonic Acid 287
— Dry Air 358
— Edwards' 363
— Efficiency of 364
— Filter-Press 305
— Le Blanc 367
— Lift-Valve 365
— Mullan 366
— Reciprocating 363
— Rotary Vacuum 366
— Rotating Valve 366
— Rotative 363
— Slide Valve 363
— Torpedo 363
— Vacuum 362
— Volume of Air removed by 367
— Wegelin and Hübner 364
— Wet Air 358, 363
Purity, Absolute 493
— Apparent 493
— Definition of 492
— Gravity 493
— Polarization Gravity 493
— Real 493
— Refractive 493

PAGE
Purity, True 493
Pycnometer 493

Quarantine of Imported Plants 153
Queensland, Harvest Time in 28
— Soils of 77

Raffinose, Determination of 524
— Rotation of 502
Railroads, Transport of Cane on 178
Rain, Effect of, on Cane 25
Rainfall as affected by Altitude 23
— Combined Nitrogen in 26
— of Barbados 22
— of Cuba 22
— of Demerara 21
— of Fiji 23
— of Formosa 23
— of Hawaii 22
— of Java 21
— of Louisiana 23
— of Mauritius 22
— of Philippines 23
Ralentisseur, Hodek 371
Ramsay Scrapers 249
Raspadura 429
Ratoonage 136
Ratoons, Long and Short 135
Rats as Cane Pests 140
Records, Necessary 561
Redos 294
Red Soils 66, 71, 73, 74
Reducing Sugars, Action of Alkalies on 265
— — Action of Lead Salts on 538
— — Destruction of 521
— — Detection of Small Quantities of 540
— — Determination of 532
— — Effect of Cane Sugar in Determination of 537
— — Glucose Ratio of 537
— — Gravimetric Determination of 533
— — Individual Determination of 540
— — Preparation of Materials for Determination of 537
— — Volumetric Determination of 538
Refiner and Producer, Interests of 438
Refractive Index Determination 498
— Solids 490
— Solids, Effect of Dilution on 491
Refractometer, Abbe 498

PAGE
Regnoso System 130
Reverted Phosphate 95
Revolving Knives in Cane Milling 229
Reynolds' Hypothesis of Heat Transmission 313
Rhizome of Cane 7
Richardson Weigher 542
Rillieux, History of his Invention 342
Rollers, Construction of ... 195, 201, 231
— Figured 231
— Groovings in 231
Romijn's Process 540
Root of Cane, Function of 10
— of Cane, Structure of 9
— System of Cane 7
Roots, Adventitious 2
Rotation of Crops 103, 171
— of Polarized Light 473
— Specific, of Sugars 502
Row, Width of 130
Rum, Aroma of 573
— Colouring of 575
— Common Clean 573
— Composition of 571, 572
— Definition of 571
— Demerara 573
— Faulty 574
— Flavour of 573
— Jamaica 573
— Manufacture of 567
— Manufacture of, in Demerara 568
— Manufacture of, in Jamaica 569
— Manufacture of, in Java 569
— Manufacture of, in Mauritius 568
— Yeasts connected with 568

Saccharate Processes 448
Saccharates 448
Saccharetin 258
Saccharimeters, Optical Arrangements of 482
Saccharomyces 564
— Vordermanii 564
Saccharum Brevipedicellatum 31
— Commune 31
— Genuinum 31
— Litteratum 31
— Officinarum 31, 32
— Sinense 31, 32
— Violaceum 1, 31
Sack Sugar 429
Sale of Sugars, Basis of 442
Salt in Cane Soils 69
Sampler, Automatic 547, 548

PAGE
Sampler, Bacher's 548
— Bareto's 548
— Continuous 547
— Davoll's 547
Samples, Preservation of 550
Sampling 546
— from Containers 548
— of Bagasse 549
— of Cane 550
— of Juice 547
— of Massecuite 561
— of Molasses 561
— of Press Cake 548
— of Sugars 548
— of Syrup 561
Sand Filters 305
Saturation (*see* Carbonation *and* Imbibition).
Sawah Land 75
Scale in Evaporators 373
— Kinds of 373
— of Polarimeter, Control of 488
— of Polariscope 487
— Removal of 373
Scheibler's Elution Process 449
Schizosaccharomyces 564, 565
Scolids as Parasites 150, 151
Scrapers for Mills 213, 249
Scum Filtration 300
Sécherie 470
Seed Cane, Nurseries for 131
— Cane, Source of 131
— Cane, Quantity required 130
— Grain 387
Seeding in Vacuum Pan 387
Seedlings, Barbados 38
— Bovell on 38
— Cross-Fertilized 34
— Demerara 35
— Discovery of 32
— Eckart on 38
— Harrison on 35
— Hawaiian 38
— History of 33
— Hybrid 34
— Inheritance in 35
— Java 39
— Kobus on 39
— Mauritius 41
— Methods used to obtain 33
— Perromat on 41
— Self-fertilized 34
Selection, Chemical, of Cane 43
Selective Harvesting 136

PAGE
Self-Fertilization 34
Separation, Centrifugal 279
— Processes 450
Settlers, Continuous 275
— Intermittent 274
Settling, Mechanism of 269
— of Juice 270
Sexual Variation 32
Short and Long Ratoons 135
Shovel 117
— Plough 122
Shredders, Cail's 230
— Chapin's 230
— Faure's 230
— Fiske's 230
— Hungerford's 230
— Searby's 231
Soft Sugar 428
Soil, Acidic 64, 66, 77
— Alluvial 65, 72
— Arid 66
— Bacterial Action in 66
— Basic 64, 66
— Black 66, 71
— Calcareous 68, 69
— Capacity of, for Water 64, 113
— Classification of 64
— Colluvial 65
— Denitrification in 67
— Diluvial 65
— Humid 66
— Interpretation of Analyses 67
— Laterite 66
— Methods of Analysis of 67
— Red 66, 71
— suited for Cane 64
— Water, Conservation of 114
Soils of Argentina 69
— of British Guiana 70
— of British India 71
— of Cuba 71
— of Egypt 72
— of Hawaii 73
— of Java 75
— of Louisiana 76
— of Mauritius 68
— of Peru 76
— of the Philippines 77
— of Queensland 77
Soldaini's Solution 540
Solids, Absolute 490
— Apparent 490
— Gravity 490
— Refractive 490

PAGE
Solids, Total 490
Soxhlet Tube 533
Soy Bean as Green Manure 97
Specific Gravity, Determination of 493
— Heat 310
— Rotation, Effect of Concentration on 504
— Rotation, Effect of Inactive Bodies on 505
— Rotation, Effect of Lead Salts on 506
— Rotation, Effect of Temperature on 504
— Rotation of Sugars 502
Spontaneous Combustion of Molasses 566
— Fermentation of Juice 566
Sports of Cane 42
Spray Ponds 370
Steam Consumption as affected by Concentration 332
— Consumption of 330
— Consumption under different Conditions 332
— Consumption, Effect of Density of Juice on 337
— Distribution of, in Evaporation 333
— first used in Milling 198
— Latent Heat of 310
— Loss of in Pipes 337
— Regeneration of 354
— Superheated Use of 357
— Table of Properties of 374
— Utilization of 328
— Velocity of, in Pipes 343
Steffen Process 392, 448, 449
Step-up Heating 336
Steuerwald Process 517
Stills, Coffey 579
— Column 578
— Continuous 579
— Coupier's 578
— Vat 577
Stocktaking and Balancing 562
Strainers 213, 300
Strontia Process 449
Stubble Digger 123
— Shaver 123
Substitution Processes 449
Sucrose, Determination of 502
— Determination of as Invert Sugar 522
Sugar, Action of Acids on 260
— Action of Heat on 257
— Assay of 502
— Available 493, 556

PAGE
Sugar Boiling, Methods used 391
— Boiling, Technique of 386
— Boiling, Theory of 383
— Composition of Raw 430
— Conditions of Sale of 440
— Conveyance of 426
— Crystal, Determination of 513
— Detection of Small Quantities 515
— Determination of, in Bagasse 511
— Determination of, in Cane ... 512
— Effect of High Temperatures on 264
— Inversion of 263
— Optical Constants of 502
— Physical Characteristics of ... 432
— Rotation of 502
— Solutions, Preparation of, for Analysis 508
— Tests for 515, 540
Sugar, Types of :—
American Assortment 429
Cassonade 428
Channel Assortment 429
Chini 428
Clayed Sugar 428
Concrete Sugar 428
Dark Crystals 429
Demerara Crystals 429
Dulce 429
European Assortment 429
Gur 428
Hoofdsuiker 429
Jaggery 428
Misri 428
Muscovado 428, 429
Panela 429
Panoche 429
Philippine Mats 429
Pilon 429
Piloncello 429
Première Sirop 429
Raspadura 429
Sack Sugar 429
Soft Sugar 428
Stroop Sugar 429
Tabaschir 428
Vesou 429
Yellow Crystals 429
Sugars, Basis of Sale of 442
— Deterioration of 434
— Dryers for 433
— Fermentation of 566, 585
— to Glucose, Ratio of 537
— Raw 428
— Reducing (*see* Reducing Sugars).

PAGE
Sugars, Return of Low 392, 423
— Separation of, in Mixtures ... 523
— Specific Rotation of 502
— Storage of 436
— Suppression of Low 393
— Valuation of 437, 442
— Washing of 424
— White 429
— Yellow 428
Sulphate of Lime as Scale 373
Sulphitation Processes 290
— Apparatus used in 291
— Syrup 291
Sulpho-Carbonation 291
Sulphur Box 292
— Dioxide, Action of, on Juice 290
— Dioxide, Determination of ... 527
— Oven 292
Sulphurous Acid, Determination of, in Juices 527
Sunshine, The Factor of 27
Superheated Steam, Use of, in Evaporators 357
Supersaturation 387
— Coefficient of 388
— Control of 390
— Determination of 388
Surface Emissivity of Heat 314
Syphons, Chapman's 347
Syrup, Classification of 424
— Sampling of 562

Tachinid Flies as Parasites 148, 151
Tafia 571
Tana (Soil) 75
Tankage as Manure 94
Tannins as Defecants 294
— of Cane 18
Tapej 569
Tegal Land 75
Temperature, Action of, on Juice ... 257
— Correction for Polarimeters ... 504
— Difference, Distribution of ... 321
— Difference, Mean 311
— Distribution of, in Multiple Effect 321
— Effect of, on Cane 25
— Effect of, on Rotation 504
— Effect of, on Sugar 264
— of Cane-growing districts 20
Tervooren's Method 518
Thermal Unit 310
— Value of Bagasse 455
— Value of Cane Straw 471

PAGE
Thermal Value of Fuels 470
— Value of Molasses 471
Thermo-Compression 356
Three-Massecuite Process 394
Toggle Gear 212
Total Darkness 476
— Solids 490
Trade Winds 24
Traditional Varieties of Cane 46
Transmission of Heat 317
Transpiration 113
Transport of Cane by Aerial Ropeways 178
— — — by Animal Power 177
— — — by Canals 177
— — — by Carts 177
— — — by Flumes 180
— — — by Railroads 177
— — — by Road 177
— — — by Traction Engines 177
— — — by Water 177
Trash, Burning of 102
— Return of, to Soil 101
Trash Turner and Fibre Volume 208
— — Fisher's 207
— — Function of 203
— — Setting of 204
— — Theory of 204
— — Types of 207
— — Watson's 207
Trashing of Cane 134
Tubes, Size of 344
Turn Ploughs 120
Two-Massecuite Process 393
Tyrosin in Canes 16
Tyrosinase in Canes 18

Unfermentable Sugars 567

Vacuum, Boiling Point of Water under 308
— Oven 501
— Pan, Calandria 401
— — Capacity of 396
— — Coil 398
— — Forenz 400
— — Freytag's 402
— — Greiner's 401
— — Grosse's 402
— — Heating Surface of 397
— — Howard's 398
— — Lyre Coil 400
— — Mechanical Agitation of 402
— — Rate of Evaporation in 397
— — Reboux 402
— — Short Coil 400

PAGE
Vacuum Pan, Standard 398
— — Tubular 401
— — Vertical Tube 401
— — Vickess 400
— — Welner-Jelinek 401
Valuation of Raw Sugars 437
Variation, Asexual 42
— Sexual 32
Varieties of Cane :—
Ainakea 61
Aleijada 61
Altamaltie 58
Assep 55
Awo de Passeroan 55
Awo de Teloek Djambo 55
B 147 38
B 208 38
B 247 41
Badilla 61
Bamboo 58
Batavian 52
Belouguet 49, 54
Big Ribbon 56
Biltong Beraboo 57
Blue 54
Bourbon 36, 50
Bois Rouge 61
Branchu 58
Brazilian 60
Brozeada 60, 61
Burke 54
Caledonia 55
Calcacante 60
Cana Rocha 57
Canne Morte 39, 55
Cappor 57
Cavengerie 57
Cayanna 60
Cayanninba 61
Cayenne 52
Chalk 57
Cheribon 52
China 52
Chinese 57
Chunnee 60
Cineza 54
Cinzenta 61
Creole 47
Crystalina 53, 61
Cuban 51
Cuttaycabo 60
D 74 36
D 78 37
D 95 37

Varieties of Cane (*continued*). PAGE

D 109 ... 37
D 117 ... 37
D 145 ... 37
D 625 ... 36, 37
D 1135 ... 37
Daniel Dupont ... 49, 56
Diard ... 54
Elephant ... 1, 59
Envernizada ... 60
Etam ... 54
Ferrea ... 61
G.C. 493 ... 42
G.C. 701 ... 42
Ganna ... 60
Gogari ... 61
Gonsalves ... 54
Goru ... 61
Green ... 54
Guingham ... 49, 56
Guinguan ... 48
H 109 ... 39
Hawaiian ... 61
Home Purple ... 54
Hope ... 54
Horne ... 42
Imperial ... 60
Indian ... 59
Iscambine ... 60
Japanese ... 59
Japara ... 54
Java ... 52
Kavengire ... 57
Keni Keni ... 51
Ko Kea ... 61
Kulloa ... 59
L 511 ... 42
La Pice ... 54
Lahaina ... 50
Leeut ... 52
Loethers ... 51, 612
Louisiana ... 54
Louzier ... 42, 50
M.P. 33 ... 41
M.P. 55 ... 41
M.P. 131 ... 41
Maillard ... 56
Malabar ... 56
Mamuri ... 54
Manila ... 55
Manteiga ... 60
Mamulele ... 61
Maracabo ... 60
Mauritius ... 60
Meera ... 54

Varieties of Cane (*continued*). PAGE

Meligeli ... 37
Mexican ... 52
Mignonne ... 42
Mird ... 54
Mont Blanc ... 54
Moore ... 54
Naga B ... 54
New Caledonia ... 61
New Guinea ... 61
Numa ... 54
Oliana ... 61
Otaheite ... 2, 47, 49, 50, 612
Oudinot ... 51
Oura ... 48, 49
P.O.J. 33 ... 40
P.O.J. 36 ... 39, 40
P.O.J. 100 ... 40
P.O.J. 139 ... 40
P.O.J. 213 ... 40
P.O.J. 228 ... 41
P.O.J. 234 ... 41
P.O.J. 247 ... 41
Palania ... 61
Panachee ... 54
Papaa ... 61
Paunda ... 60, 612
Rinang ... 57
Po-a-ole ... 58
Poorea ... 60
Portii ... 51, 57
Port Mackay ... 57, 58
Preanger ... 54, 55
Puttaputti ... 60
Purple Bamboo ... 54
Queensland Creole ... 54
Ribbon ... 42
Rappoh ... 53
Rayada ... 54
Red ... 55
Restali ... 60
Rocha ... 57
Rose Bamboo ... 55
Roxinha ... 61
Salangore ... 56, 61
Samsara ... 60
San Salvador ... 54
Seete ... 53
Singapore ... 52
Sin Nombre ... 54, 59
Soerat ... 54
Striped ... 54
,, Bamboo ... 55
Tanna ... 55
To Oura ... 48, 49

Varieties of Cane (*continued*). PAGE
  Tip 58
  Transparent 36, 54
  Uba 59
  Ukh 1, 60
  Uouo 49
  Vaihi 49
  Vermehla 49, 61
  Yellow Violet 49
  ,, Caledonia 56
  Zwinga 59
Vegetable Carbons as Purificants 295
Vena Contracta 360
Vesicular Transference in Evaporators 371
Viscosity in Molasses Formation 447
Viscous Fermentation 566
Vivien's Method 513

Water actually evaporated in Multiple Effects 323
  — Air contained in Condenser ... 368
  — Capacity of Soil for...... 64, 68, 114
  — Conservation of Soil...... 114, 134
  — Consumption by Cane........ 113
  — Cooling of........ 370
  — Determination of 499
  — Determination in Bagasse ... 500
  — Determination in Juices 500
  — Determination in Massecuites 500
  — Determination in Molasses ... 500
  — Determination in Sugars ...499, 500
  — Economic Use of, in Milling 238
  — Evaporation of, from Soil...... 114
  — Flow of, in Pipes 361
  — Optimum Quantity in Soil ... 113
  — Quality of, for Irrigation...... 114
  — Quantity of, for Irrigation 108, 112
  — required in Condensers 361
  — Source of, for Irrigation...... 109
  — Transpiration of, by Cane ... 113
Wax of Cane 17
Webel-Picard Combination in Evaporators 354
Weeding and Moulding........ 132
Weeds associated with Cane 139
  — Eradication of........ 135, 140
Weighing Machine, Richardson's... 542
Weighted Average........ 561
Weight of Cane, Determination of... 542
  — of Juice, Determination of... 542
  — of Massecuites, Determination of 497

PAGE
Weight of Molasses, Determination of 545
  — of Press Cake, Determination of 545
  — of Sugar, Determination of ... 545
  — of Water, Determination of... 552
Westphal Balance........ 494
Wetness, Degree of 25
White Sugar, Boiling Routines for... 406
  — Sugars, Centrifugalling of...... 424
Wiley's Filter Tube 539
Wind, Effect of, on Cane 24
Windrowing 131
Wines, Low 578, 582
Wire Gauze Filters 305
Wohl's Lead Saccharate Process...... 450
Woolly Pyrol as Green Manure 97
Worms affecting Cane 145
Wrapping of Cane 135
Wulff's Process of Crystallization ... 392

Xanthine Bases in Soil........ 16

Yeasts associated with Molasses...... 567
  — Bottom 564
  — Budding 564
  — Conjugating 564
  — Families of 564
  — Fission 564
  — of Cuba 565
  — of Demerara 565
  — of Jamaica 565
  — of Java 564, 569
  — of Natal 565
  — of Peru 565
  — of Trinidad 565
  — Top 564
Yeast Processes, Pure 571
  — Use of, in Analysis 520
Yellow Crystals 429
Yield of Cane in Cuba 138
  — — — in Hawaii 137
  — — — in India 138
  — — — in Java 137
  — — — in Mauritius 138
  — — — in Queensland 138
  — — — in Peru 138
  — — Sugar per Acre 137

Zagas System 134
Zamaron's Method 512
Zygosaccharomyces 564, 565

INDEX TO PATENTS

(Unless otherwise stated, the reference numbers of Patents given in this volume refer to Patents of the United Kingdom.)

BAGASSE FIRING: PAGE
Cook 465
Crosley 470
Fryer and Alliott 466
Gros-Desormeaux 470
Marie 464
Merrick 470
Stirling Boiler Co. 467

CANE CUTTING:
Bercerra 176
Bolden 176
Dollens and Zschech 176
Dupuy 176
Gaussiran 176
Ginaca 176
Henwood 176
Hustace and Smiddy 175
Hylton-Bravo 175
Le Blanc 176
Luce 176
Paul 175
Paxton 175
Sloane 176
Stickings 176
Tomlinson 176
Wilson 176

CANE LOADING:
Bennet 176
Crozier 176
Herbert 176
Lotz 176

CANE UNLOADING:
Carr 181
Gregg 182
Kiely 181
Mallon 182
Robinson 181
Sanchez 181
Walsh 182

CENTRIFUGALS:
Abel 427
Alliott 408
PAGE
Aspinall 427
Bessemer 409, 427
Brooman 408
Cottle 412
Donner 424
Gordon 413
Green 413
Gwynne 412
Hardman 408
Hepworth 411
Johnson 409
Lafferty 412
Laidlaw 413
Laidlaw and Matthey 416
Lubinski and Krajewski 425
MacFarlane 414, 425
Matthewwissen 425
Merril 413
Nind 409
Patterson 425
Penzoldt 408
Pott, Cassels 414
Roberts-Gibson 413
Rotch 408
Seyrig 408
Sillem 413
Stewart 427
Theissen 414
Tolhurst 412
Watt 416
Weston 409, 413
Williamson 414, 416

DEFECATION, CARBONATION, ETC.:
Battelle 282
Bessemer 279
Corne and Burguirères 276
Dubrunfaut 289
Duncan 295
Gans 295
Gill 295
Gwynne and Young 295
Harvey and Scard 278

PAGE
Heriot 279
Hignette 279
Hlavati 295
Howard 294
Kessler 295
Kopke 279
Laidlaw 279
Marix 295
Nash 295
Oxland 294
Pickering and Macgregor 275
Possoz 279
Possoz, Perrier and Cail 280
Rillieux 278
Rousseau 280
Seyfurth 293
Scoffern 295
Stewart 290
Stokes 294
Stolle 289
Tamin 295
Taylor 273
Terry and Parker 295
Thomas and Petree 279
Watson 294
Williamson 278

DIFFUSION:
Crossley 255
Hinton 255
Kessler 251, 254
MacMullen 255
Michel 251
Naudet 255
Perichon 255
Rak 251
Robert 251
Watson 251

EVAPORATORS:
Aitchison 340
Alliott 342
Bour 340
Chapman 345, 353
Cleland 340, 341, 345
Czapiowski 340
Deerr 354
Degrand 341
Dihl 340
Finzel 341
PAGE
Fletcher 344
Foster 345
Howard 341
Kestner 340, 352
Kneller 341
Knight and Kirk 341
Lillie 340, 350
Maxwell 343
McNeil 340, 344
Meyer and Arbuckle 340, 345
Miller 340
Pecquer 341
Pontifex 341
Prache and Bouillon 355
Rillieux 342
Robertson and Ballinghall 342
Sandborn 354
Smith 344
Stein 341
Stillman 353, 371
Taylor 340
Ure 340
Vivien and Dujardin 343
Wiebel and Picard 354
Wilson 340
Wood 340
Wyatt 340
Yaryan 340, 350

FILTRATION:
Abraham 301, 305
Bessemer 302
Casamajor 302
Cleland 301, 302
Crossley and Stevens 301
Danchell 301
Danêk 301
Dehne 301
Heddle, Glen and Stewart 301
Jacquier and Danêk 301
Kelly 304
Kostalek 301
Mayer 301
Needham and Kite 301
Robertson and Watson 302
Schroeder 302
Soxhlet 302
Sweetland 304
Wiechmann 301

MILLS: PAGE
Aitken 202
Aitken and Mackie 231
Allan 200
Alliott and Paton 200
Bartlett 200
Bessemer 250
Blanchard 229
Bolk 201
Bonnefin 229
Boyer 200
Brullard 211
Buchanan 199
Buchanan and Keay 200
Cail 227
Cail and Ferron 230
Caird and Robertson 215
Chapin 230
Chapman 202, 228
Crossley and Stevens 250
Curtis 231
Deacon 227
De Coster 229
Deerr 232, 249
Delbert 200
De Mornay 228
Easton and Hoyland 229
Faure 230
Fisher 207
Fiske 230
Fleming 198
Fletcher 200, 201, 202, 228
Flower 213
Fogarty 201
Fryer 249
Gibson 249
Guy 227
Halpin and Alliott 215
Hatton 200
Hedemann 201
Hosack 227
Howard 211
Hudson 212
Hughes 227
Hungerford 230
Kidd 228, 230
Kottman 250
Krajewski 230
Lateulade 227
Le Blanc 227
Mallon 248
PAGE
Marshall 230
Matthey 250
Messchaert 232
McDonald 211
McNeil 200, 202, 250
McOnie 202
Ramsay 249
Reynoso 229
Riley 228
Robertson and Hudson 227
Robinson 215, 227
Rousselot 199, 215, 227
Russel 228
Searby 231
Skekel 200
Stewart 211
Stillman 202
Thoens 200
Thomson and Black 230
Walker 200
Watson 200, 207, 215
Webb 215
Wilson 200, 215

MOLASSES TREATMENTS:
Dubrunfaut 449, 450
Jünemann Pierre de Rieu 449
Kastner 450
Margueritte 451
Scheibler 449
Steffen 449, 450
Wernicke 451
Williams 447
Wohl 450

PUMPS:
Burchart and Weiss 364
Edwards 363
Gwynne 367
Le Blanc 367
Mullan 366

VACUUM PANS:
Czapiowski 402
Freytag 401
Greenwood 398
Lorenz 400
McNeil 402
Shears 402
Vickess 400
Walker 401

BRISTOL: BURLEIGH LTD. AT THE BURLEIGH PRESS